A&P INSTRUMENT®
科 藝 儀 器

Factory Automation

Learning systems and services for basic and further training

FESTO

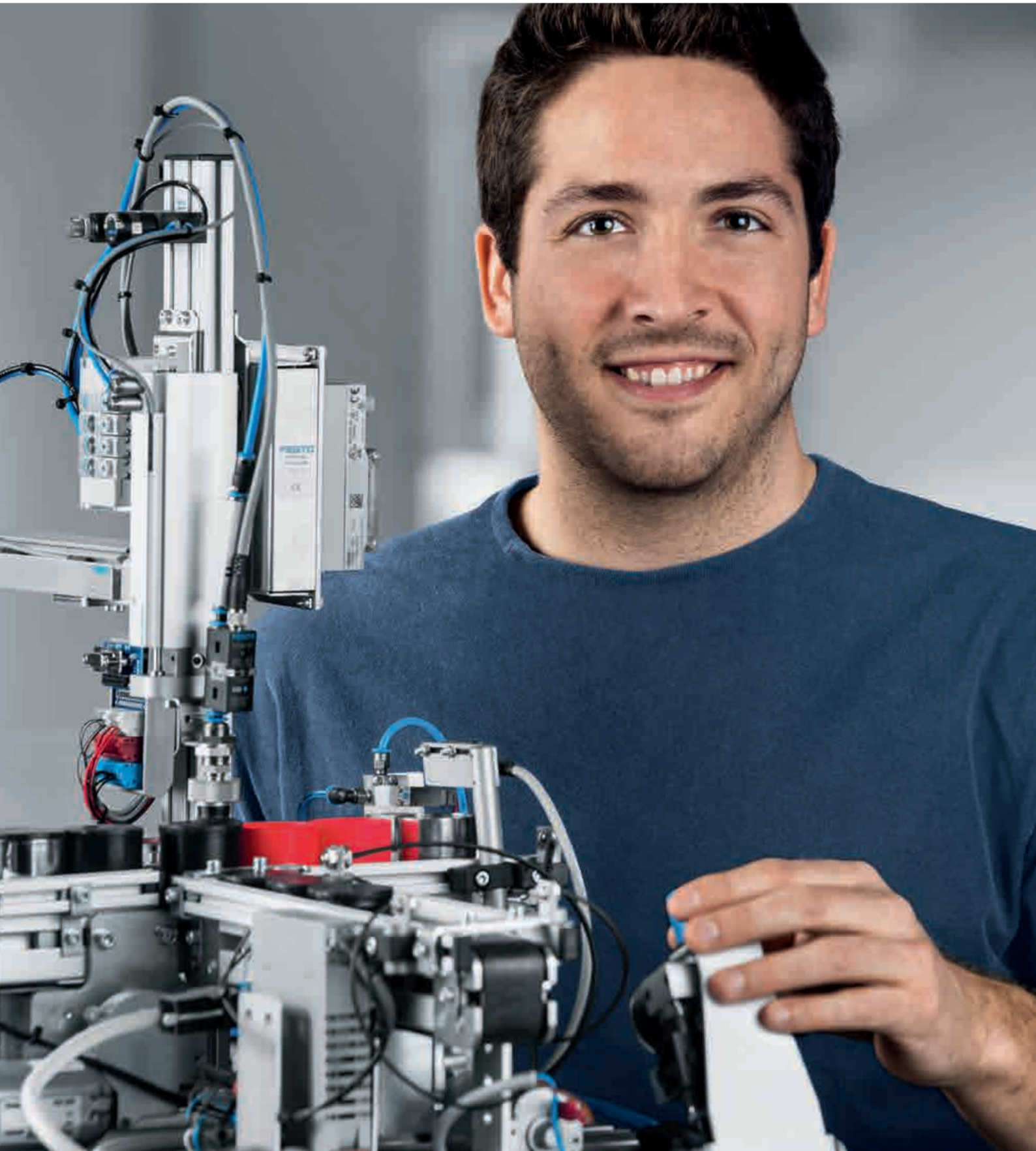

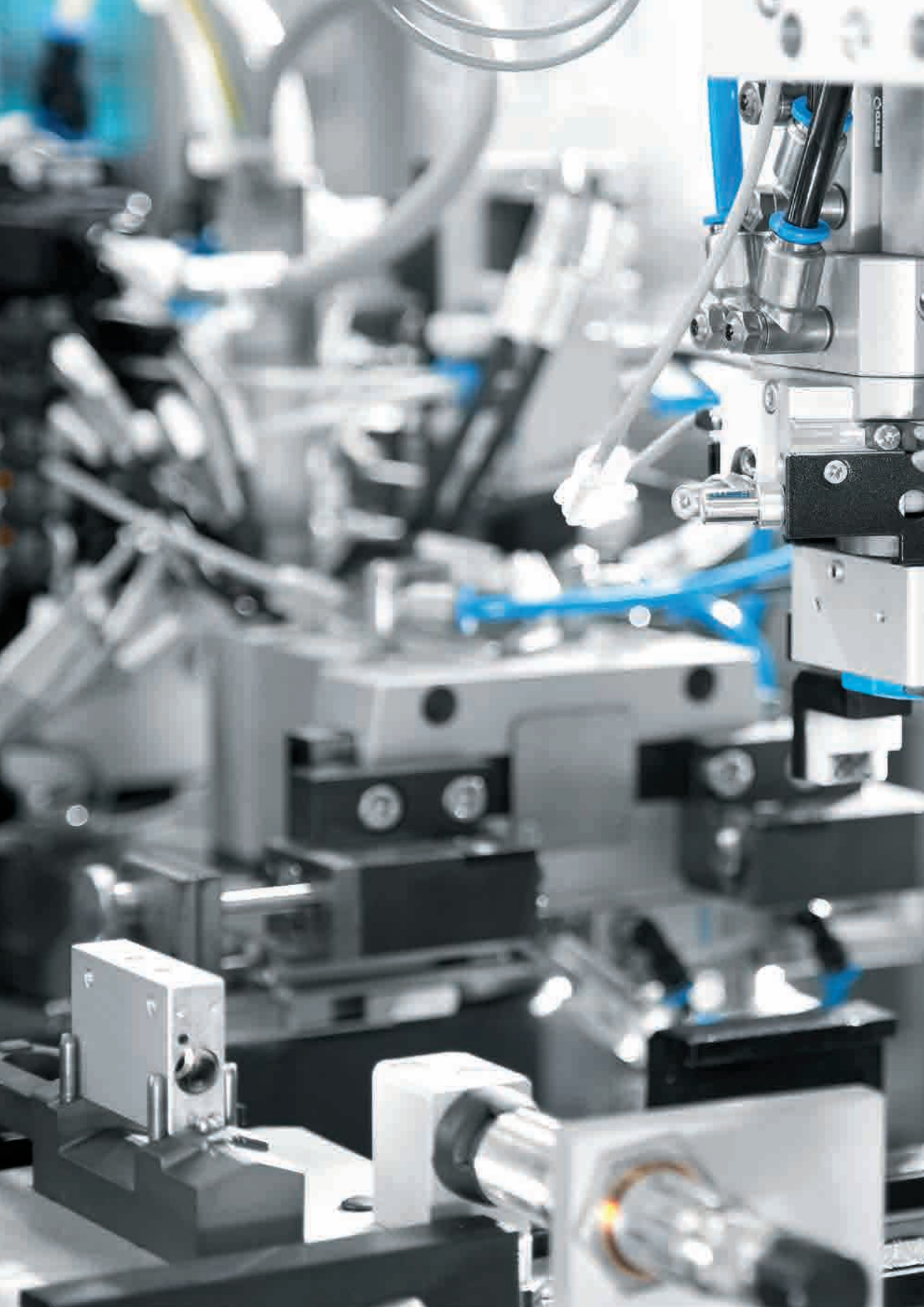

Content

Factory automation learning solutions ...

Dynamic, multidisciplinary fields of science and technology

Today's advanced manufacturing industry relies heavily on mechatronics and automation technologies, making these technologies fast-growing career fields.

Mechatronics is the synergistic combination of mechanical engineering, electrical engineering, electronics, information technology, and systems thinking utilized in the design of products and automation processes. As industrial automation deals primarily with the automation of manufacturing, quality control, and material handling processes, it is easy to understand the importance of mechatronics and automation training.

High quality, flexible solutions
The Modular Production System MPS® is the origin of and basis for almost all mechatronic training systems by Festo Didactic. Our learning solutions also encompass a wide range of topics directly related to mechatronics and factory automation, such as robotics, CAD/CAM, and PLC.

Instructors can also easily expand learning by selecting other products and services in a wide range of technologies.

All systems are 100% modular, allowing for expansion and flexibility, making investments future-proof with no dead-ends.

… from technology fundamentals to complete industrial automation

Festo Didactic offers a wide range of learning systems – from small, table-top systems to full-fledged learning factories – that support skills development and knowledge acquisition in all aspects of mechatronics and automation.

All around the world, Festo Didactic supports technical education efforts for diverse settings, including: secondary schools, colleges, vocational schools, universities, industrial companies, and more.

Success with the right combination of learning methods
A broad array of products, including hardware, simulation software, web-based training products, and extensive curriculum, combine to provide instructors with the most comprehensive, industrial-based training programs available worldwide.

Fostering skills and knowledge development
Combining learning tools and equipment enables instructors to create an ideal environment for Mechatronics and Factory Automation training tailored to specific training objectives and learning scenarios.

Technical training objectives include the ability to:
- Analyze functional relationships in mechatronic systems
- Manufacture mechanical components
- Follow information and energy flow in electrical, pneumatic, and hydraulic subsystems
- Plan and organize work flow
- Commission, troubleshoot, and repair mechatronic systems
- Communicate using industrial network protocols, including DeviceNet™ and PROFIBUS.

Holistic and turnkey training solutions

Everything from a single source

Design, planning, and equipping of complete technology and training labs

Festo Didactic has set itself the goal of making learning even more effective, using its experience from 50 years of company history to develop learning solutions, as well as lab and workshop equipment, for the training sector.

We will support you with the conceptualization, planning, and equipping of your individual labs or workshops by means of a comprehensive range of learning systems and a broad spectrum of technologies in the area of technical training. Our range of products and services comprises complete learning systems, as well as industrial training and consultation.

The benefits for you

- Security during the planning process and professional consultation during the entire project
- State-of-the-art planning tools, as well as a range of products which are tailored to your requirements, ensure rapid and effective progress with projects
- Investment security and optimal utilization of laboratories customized for your training needs
- Professional lab design based on international standards
- State-of-the-art training equipment that combines Festo Didactic learning systems with products by other market leaders

We offer a comprehensive scope of services, from project definition and conceptual planning, to installation of equipment and training for:
– Industrial training centers
– Vocational training centers
– Universities and colleges
– Sixth forms
– Advanced Placement (AP) courses
– Knowledge labs

Virtual Tour
→ www.festo-turnkey-solutions.com

Effective learning environments for a positive learning experience

Essential technologies
Festo Didactic can develop customized mechatronics and automation training environment needs, such as:
– Virtual Mechatronics
– Partly Automated Systems
– Industry 4.0
– Fluidics
– Mechanical Engineering
– Electricity/Electronics and Drive Technology
– CAD/CAM/CNC

Partly automated systems – Highlights
– MPS® Transfer System for basic and advanced industrial training, mechatronics, and automation
– MPS® PA – The elementary control loops in the process industry
– EduTrainer® MPS®/MPS® PA – Programmable logic controllers from the market leader
– Connected Learning with Tec2Screen® – an innovative learning methodology

Industry 4.0 – Highlights
– CP Factory with Industry 4.0 applications: CPS, RFID technology, NFC, Plug & Produce, standard interfaces, SOA, MES4 software, Augmented Reality
– CP Factory as a convertible factory with exceptional flexibility
– CP Factory Robot Cell for industrial robotics training

Flexible room concepts
Innovative workbenches

Equipping of learning rooms according to individual requirements

Flexible use of space
We will present you with an individual concept based on the spatial conditions and specific requirements of the location. In doing so, we will focus on cost-effective and optimal use of space, as well as multi-functional equipment. Training in the areas of electrical engineering, pneumatics, or mechatronics, as well as theoreti cal training or lectures, can take place in the same room. Using the ceiling system, industrial connectors, and universally mobile equipment, the room layout can be adapted in just a few minutes.

Efficient and versatile use of rooms saves space and cost.

The benefits for you
During the consultation you will profit from our years of experience not only with the training market, but also with installing various training centers, complete workshops, and labs. We will take into account the latest safety requirements, and our high quality standards guarantee a long service life.

We will be glad to provide an on-site concept and planning consultation.

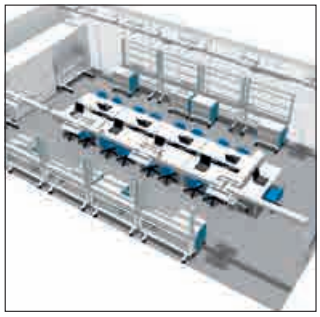

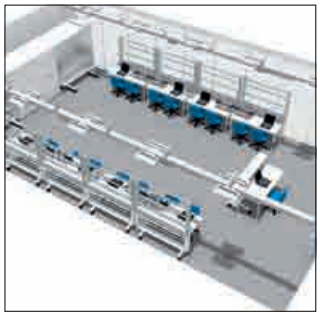

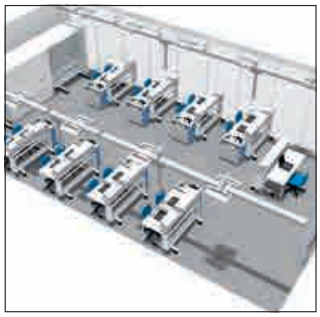

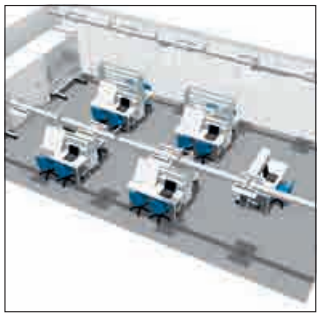

Multi-functional teaching rooms
– Individual
– Flexible
– Cost-efficient

Our room concept offers individual options for your learning environment equipment. Mobile workbenches and utility supplies that you can fold back up into the ceiling ensure flexible and cost-efficient utilization of rooms.

Further information regarding flexible room concepts see:
→ www.festo-didactic.com

Main components of room concept

Storage
Both workbenches and equipment can be stored clearly and compactly in intelligent storage systems in the same room or in an adjoining room; an advantageous flexibility provided by our overall concept.

Workstation system
The mobile supports for the learning systems enable a high degree of flexibility with virtually unlimited options. The workbenches can be optimally adapted to any teaching situation, quickly and simply. This refitting option enables highly efficient space utilization, and therefore, the greatest possible cost efficiency and safety.

Power supply
The flexible ceiling system is a holistic concept for multi-functional rooms, which enables hands-on and theoretical teaching with appropriate utility supplies. With energy, compressed air, and a data connection directly at the learning location, the ceiling system is ideal for basic and specialized technical training.

Media

Multimedia training programs
Effective learning solutions

Festo Didactic's flexible training programs allow instructors the freedom to be creative, increasing student motivation.

All our training programs have the following features:
– Unparalleled didactic and multimedia course topics
– Scope for self-study during classroom-based training
– Learning scenarios can be individually customized
– Varied program functions, such as a glossary, search function, notes
– Can be used in conjunction with Classroom Manager
– Can be integrated into training concepts which use other media (Word, Excel, PDF, etc.)
– Participant guidance
– Monitoring of learning progress and certification

The training programs are optionally available as follows:
– CD-ROM
– License for local networks (on request)
– Web-based training (WBT) for Classroom Manager
– For installation on one of your servers or in your Learning Management system
– For integration in open-source software (such as Moodle, Ilias, etc.)
– Alternative lease option available directly via the Internet using myleCampus

Festo Didactic also provides customized E-Learning packages for specific needs and gladly offers step-by-step guidance and advice from the design phase through the installation of the complete Learning Management System.

Overview of our programs:

Fluid engineering
– Pneumatics
– Electropneumatics
– Hydraulics
– Electrohydraulics

Electrical engineering
– Electrical safety measures
– Electrical engineering 1
– Electrical engineering 2
– Electronics 1
– Electronics 2

Automation technology
– Sensor technology 1
– Sensor technology 2
– Discover MPS® 200
– Actuators – DC motor
– Electric drives 1
– Electric drives 2
– Open- and closed-loop control
– GRAFCET
– PLC programming in accordance with IEC 61131
– LOGO! Training
– Fieldbus technology
– Machine vision
– Safety engineering
– Process automation

Metalworking
– Turning
– Milling
– Drilling
– Materials science

Technology and Environment
– The fascination of technology
– Renewable energies
– Environmental protection in the office

Organization and methods
– Project management
– Time management
– Internet search

Lean Management/Lean Production
– Value stream analysis and mapping
– Poka Yoke
– 5S – Workstation organization
– TPM – Total Productive Maintenance

Management and teamwork
– Customer orientation
– Team performance
– Personnel management
– Compliance

Training
– Safety at work
– General law on equality and discrimination (German: AGG)
– Basic principles of accounting

Management systems
– Classroom Manager
– Content Builder
– Local Knowledge Manager
– Competence Manager
– Recruiting Manager
– Classroom Manager Enterprise

System requirements for WBTs
– PC with Win 2000/XP/Vista/Windows 7
– Flash Player, version 8.0 or higher
– Sound card
– DVD drive
– Screen resolution: minimum 1024 x 768 pixels

Languages
All of our WBTs are available in several languages. The language is selected when starting the WBT and can be changed directly on every page during the training, and includes a multilingual dictionary for every training program.

We will provide an individual quotation for any language not listed.

my|eCampus
A vast range of high-quality training programs available 24/7.

my|eCampus contains engaging and informative training programs for automation technology, and mechatronics. Whether school or university students, technicians or engineers – anyone with internet access can access these topics around the clock and earn further qualifications.

Try it! It is worthwhile for all users, not just engineers!

Pneumatics

This course provides an introduction to the subject of pneumatics. The program is divided into technical knowledge and coursework.

Technical knowledge
This interactive, self-guided program covers the basics of pneumatic control. Participants learn to find practical and theoretical solutions to the key tasks of a basic course on pneumatics, E.g., as part of a basic vocational training course.

Course
In this course, the theoretically acquired technical knowledge is reinforced. A wide range of exercise types makes the course engaging and effective: participants draw symbols and circuit diagrams, answer multiple-choice questions, and set up and connect circuits in PC-based video clips.

From the table of contents:
- Physical basics (units, properties, laws)
- Energy supply (production, preparation, and distribution of compressed air)
- Circuit diagram (circuit diagram, symbols)
- Drive components (applications, linear drives, rotational drives)
- Valves (designs, directional valves, stop valves, pressure control valves, flow control valves, valve combinations, logic elements)
- Signaling components (manual signaling, endpoint detection)
- Additional requirements

E.g., single license with CD-ROM/DVD
Online de/en/es/fr/fi/et/el/zh

Order no.	**540911**

Network de/en/es/fr/fi/et/el/zh

Order no.	**540913**

Electropneumatics

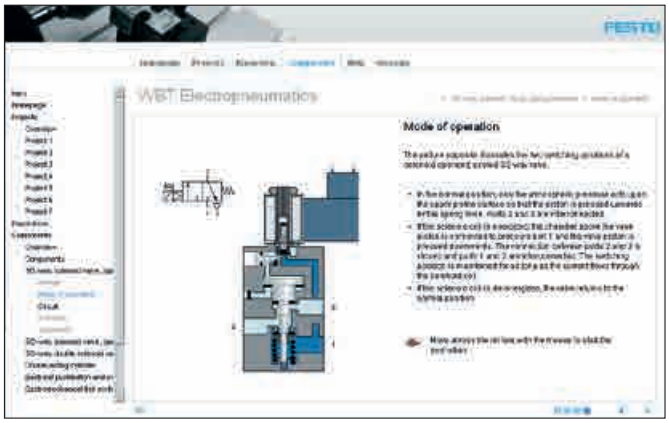

The Electropneumatics training program builds on the Pneumatics training program and reinforces material already learned from practical projects. Starting with actual industrial applications, fundamental electropneumatic circuits are produced. Multiple exercises allow trainees to repeat, apply, and develop what they have learned. During an exercise, the program responds to each of the trainee's answers with the appropriate feedback.

The trainee is supported by the basic knowledge module, which provides fundamental knowledge on electropneumatics in a structured, systematic manner. In the components module, the structure, function and application of typical electropneumatic components is described. Various supporting materials are available to complete the exercise, such as PDF documents, a variety of downloads and a comprehensive glossary.

From the table of contents:
- Advantages and drawbacks of electropneumatics
- Safety in electropneumatic circuits
- Fundamentals of electrical engineering
- Pneumatic circuit diagram
- Electrical circuit diagram
- Basic logic functions
- Direct and indirect electrical control, time and pressure dependent process controls
- Signal storage in the power and in the control unit, latching circuit
- Documentation for a control unit
- Maintenance and repair of electropneumatic systems
- Solenoid actuated valves
- Double-acting cylinders
- Electrical buttons and switches
- Sensors
- Relays and contactors, timed relays
- Pressure switch
- Standardized circuit diagrams, electrical and pneumatic circuit diagrams

E.g., single license with CD-ROM/DVD
Online de/en/es/fr/fi/et/zh

Order no.	**540923**

Network de/en/es/fr/fi/et/zh

Order no.	**540925**

Electrical engineering 1

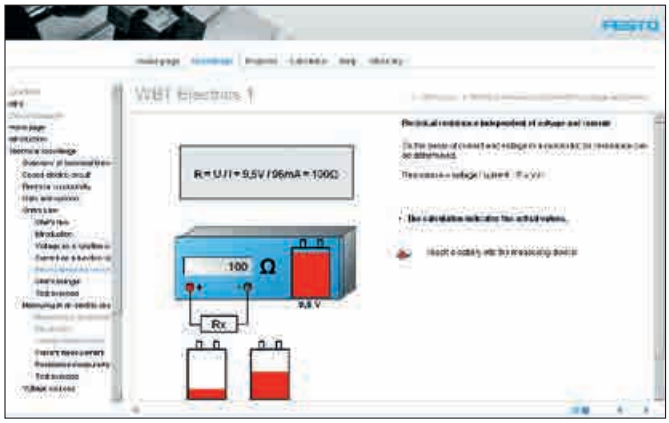

The “Electrical engineering 1” training program is one of a series of new programs in the field of electrical engineering and electronics. These programs are real-world oriented and authentically structured. Case studies from practice provide a concise illustration of the topics covered. All training content is taught by means of audio clips. Additionally, the narrative text can be viewed on the sitemap.

Trainees experience a regular exchange of input and output, with phases of presentation and explanation alternating with phases of activity and interaction. This enhances motivation and learning.

Progress monitoring exercises are scheduled after a maximum of five pages of learning, with the goal of having trainees repeat, apply, and develop what they have learned themselves. Exercises are incorporated during teaching, at the end of each learning step, and within the case studies. During an exercise, the program responds to each of the trainee’s answers with the appropriate feedback.

Various tools are built-in to the training program, such as Excel worksheets, an integrated calculator, PDF files, and various downloads. The training programs contain both a comprehensive glossary and a full text search.

From the table of contents:
– Closed circuit
– Electrical conductivity
– Units and symbols
– Ohm’s Law
– Measuring in the circuit
– Voltage supplies
– The resistor as a component
– Series connection of resistors
– Parallel connection of resistors
– Voltage divider
– The resistor as a sensor
– Battery-powered screwdriver
– Measuring range extension
– Temperature controlled heating
– Level detection

E.g., single license with CD-ROM/DVD
Online de/en/es/fr/fi/et/sv/el/zh

Order no.	**549623**

Network de/en/es/fr/fi/et/sv/el/zh

Order no.	**549625**

Electrical engineering 2

The “Electrical engineering 2” training program is one of a series of new training programs in the field of electrical engineering and electronics. These programs are real-world oriented and authentically structured. Case studies from practice provide a concise illustration of the topics covered. All training content is taught by means of audio clips. Additionally, the narrative text can be viewed on the sitemap.

Various tools are built into the training program, such as Excel worksheets, an integrated calculator, PDF files and various downloads. The training programs contain both a comprehensive glossary and a full text search.

From the table of contents:
– Electric charge
– Capacitor
– A capacitor in a DC circuit
– A capacitor in an AC circuit
– Applications of the capacitor
– Variable capacitor
– Coil
– A coil in a DC circuit
– A coil in an AC circuit
– Applications of the coil
– Physical variables
– Calculating with changing values
– Light switch-off delay
– Electrical behavior of a grinder
– Power generation and transmission

E.g., single license with CD-ROM/DVD
Online de/en/es/fr/fi/et/sv/el/zh

Order no.	**549626**

Network de/en/es/fr/fi/et/sv/el/zh

Order no.	**549628**

Electrical protective measures

This interactive multimedia training program provides an introduction to the complex topic of protective measures. It explains what electrical protective measures are and how they are classified. Trainees will also become familiar with all the legal regulations in this area.

The measures that are effective in preventing direct and indirect contact are outlined using various specific examples and functional principles.

Finally, there is an explanation of how protective measures are tested and what actions should be taken in case of an accident involving electricity.

From the table of contents:
- The dangers of electricity
- Humans and electricity
- Electric shock hazards
- What are electrical protective measures and how are they classified?
- Protection levels
- Protective measures, protection classes
- Differences between DIN standards, VDE regulations and DIN-VDE standards, statutory requirements, and legal consequences.
- Definition and overview of protective measures to prevent direct contact
- Protection by insulating active components
- Protection by covering or cladding
- Protection by barriers
- Protection by distance
- Definition and overview of protective measures to prevent indirect contact
- Production by disconnecting power supply
- Mains systems (TN, TT, IT systems)
- Protection by disconnection
- Testing protective measures
- Measurement and measuring devices
- Safety and assistance
- Summary and questions to check understanding

E.g., single license with CD-ROM/DVD
Online de/en/es/fr/zh

Order no.	**571118**

Network de/en/es/fr/zh

Order no.	**571119**

Our authoring tool:
Content Builder
Design and create your own training media

Electronics 1

The “Electronics 1” training program is one of a series of new programs in the field of electrical engineering and electronics. These programs are real-world oriented and authentically structured. Case studies from practice provide a concise illustration of the topics covered. All training content is taught by means of audio clips. Additionally, the narrative text can be viewed on the sitemap.

Trainees experience a regular exchange of input and output, with phases of presentation and explanation alternating with phases of activity and interaction. This enhances motivation and learning.

Progress monitoring exercises are scheduled after a maximum of five pages of learning, with the goal of having trainees repeat, apply and develop what they have learned themselves. Exercises are incorporated during teaching, at the end of each learning step, and within the case studies. During an exercise, the program responds to each of the trainee’s answers with the appropriate feedback.

Various tools are built into the training program, such as Excel worksheets, an integrated calculator, PDF files and various downloads. The training programs contain both a comprehensive glossary and a full text search.

From the table of contents:
– Semiconductor technology
– Diodes
– Bipolar transistors
– Field-effect transistors
– Regulated power supply
– Audio amplifier
– Audio amplifier with sound control

E.g., single license with CD-ROM/DVD
Online de/en/es/fr/fi/zh

Order no.	**549629**

Network de/en/es/fr/fi/zh

Order no.	**549631**

Electronics 2

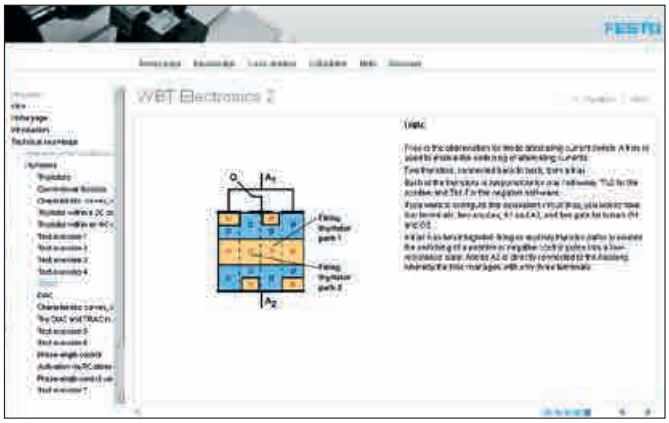

The “Electronics 2” training program is one of a series of new programs in the field of electrical engineering and electronics. These programs are real-world oriented and authentically structured. Real case studies provide a concise illustration of the topics covered. All training content is taught using audio clips. Additionally, the narrative text can be viewed on the sitemap.

Various tools are built into the training program, such as Excel worksheets, an integrated calculator, PDF files and various downloads. The training programs contain both a comprehensive glossary and a full text search.

From the table of contents:
– Signal types
– Integrated circuits
– Operational amplifier (OpAmp)
– AC voltage of various frequencies
– Characteristic values of amplifying circuits
– Circuit technology of amplifiers
– Filters
– Bistable flip-flop
– Single flip-flop
– Sine wave generator
– Rectangle generator
– Thyristor-controlled drilling machine
– Brightness control with triac
– Adjusting the speed of an electric screwdriver

E.g., single license with CD-ROM/DVD
Online de/en/es/fr/fi/zh

Order no.	**549632**

Network de/en/es/fr/fi/zh

Order no.	**549634**

Our authoring tool:
Content Builder
Design and create your own training media

All training programs on data storage medium or as a WBT version, also for installation on networks and learning management systems – with as many licenses as you need.

Sensor technology 1

Sensors in pneumatics
This training program deals in detail with the sensors used to detect end position on cylinders and with pressure and flow sensors in pneumatic systems. Based on a complex example from industrial practice, trainees are taught to select suitable sensors. The necessary basic knowledge for this is provided in the Technical Knowledge and Components modules, to which they can refer at any time.

All training content is taught by means of audio clips. Additionally, the narrative text can be viewed.

Content extracts:
- Project: Selection of sensors in one of the clamping units of a processing centre
- Advantages and disadvantages of various end position sensors on cylinders
- Simple displacement encoders on cylinders
- Use of pressure sensors to improve safety in pneumatic systems
- Use of flow sensors to safeguard system cycle times
- Output signals from sensors
- Connection technology
- NO/NC (Normally Open, Normally Closed)
- Switching functions
- Sensors for end position detection: Pneumatic and mechanical limit switch, reed switch, transistor switch, Hall sensor, position sensor
- Types of pressure measurement
- Sensors for pressure measurement: Mechanical pressure switch, electronic pressure sensor,
- Sensors for flow measurement: Volumetric flow meter, effective pressure principle, ultrasonic flow meter, mass flow meter, heat-loss method

E.g., single license with CD-ROM/DVD
Online de/en/es/fr/fi/et/zh/usa

Order no.	**549752**

Network de/en/es/fr/fi/et/zh/usa

Order no.	**549755**

Sensor technology 2

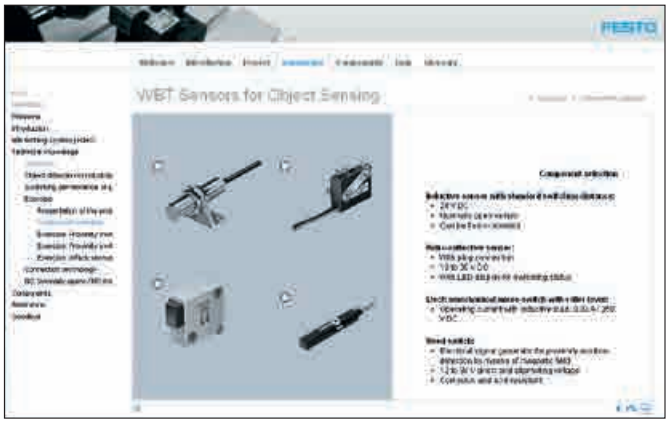

Sensors for object detection
This training program deals in detail with the sensors used to detect objects in automated systems. Based on a complex example from industrial practice, trainees are taught to select the suitable sensors. The necessary basic knowledge for this is provided in the Technical Knowledge and Components modules, to which they can refer at any time.

All training content is taught by means of audio clips. Additionally, the narrative text can be viewed.

Content extracts:
- Project: Selection of sensors in a milk bottling plant
- Object detection in industrial practice
- Switching characteristics of proximity sensors
- Hysteresis
- Connection technology: Two-wire technology, three-wire technology, four-wire technology
- NO/NC (Normally Open, Normally Closed)
- Inductive sensors: Construction and mode of operation, factor-1 sensors, special designs, flush fitting sensors, application examples
- Optical sensors: Diffuse sensor, through-beam sensor, retro-reflective sensor, background fade-out, fibre optic cable, light types, reflection types, adjustment, contrast sensor, color sensor
- Capacitive sensors: Construction, mode of operation, usage and examples
- Ultrasonic sensors: Construction, mode of operation, applications

E.g., single license with CD-ROM/DVD
Online de/en/es/fr/fi/et/zh

Order no.	**549758**

Network de/en/es/fr/fi/et/zh

Order no.	**549761**

Electric drives 1

The “Electric drives 1” interactive multimedia training program provides an engaging introduction to the world of electric motors.

The first section sets out the basic principles of electric drives. The second section illustrates the construction and functioning of DC motors, while the third section deals with the special features of AC motors.

From the table of contents:
- Basic principles of electric drives
- Familiarization with different motor types (stepper motor, asynchronous motor, universal motor)
- Mechanical principles (conversion of mechanical/electrical energy, motor – generator, circuit diagram and current direction, transmission variables (force, mechanical power, efficiency etc.), definitions of torque and speed)
- Electronic principles (basic principle of the motor, Lorentz force using the example of a conduction loop, electrical and magnetic fields, occurrence of torque, right-hand rule)
- Familiarization with different DC motors
- General (functional principles, commutation, technical data, brushless DC motor, load dependency, difference between series and parallel connection)
- Parallel connection behavior
- AC motors
- Difference in power supply (DC, AC, three-phase AC)
- Familiarization with different AC motors
- General functional principle (difference between synchronous and asynchronous motor), technical data, rating plate, characteristic curves and their interpretation, definition of reactive, apparent, and effective power)
- Single-phase AC motor
- Three-phase AC motor special cases (stepper motors)
- Summary and review exercises

E.g., single license with CD-ROM/DVD
Online de/en/es/fr/zh

Order no.	**571120**

Network de/en/es/fr/zh

Order no.	**571121**

Electric drives 2

The training program “Electric drives 2” further explores the material covered in “Electric drives 1” and also includes new topic areas.

This learning program is suitable for beginners and advanced students. The first two chapters address the topic of controlling DC and AC motors. The third chapter focuses on the energy efficiency of electric drives, looking at economic and environmental aspects.

From the table of contents:

Controlling DC motors
- Armature reaction
- Speed control
- Four-quadrant operation

Controlling AC motors
- Motor characteristic curve
- Open-loop and closed-loop speed control
- Frequency converters
- Smooth start-up

Energy efficiency
- Economic aspects
- Degree of efficiency
- Minimising losses
- Reliability
- Energy efficiency measures
- Environmental aspects
- Merits of electric motors

E.g., single license with CD-ROM/DVD
Online de/en/es/fr/zh

Order no.	**573775**

Network de/en/es/fr/zh

Order no.	**573776**

Our authoring tool:
Content Builder
Design and create your own training media

Actuators – DC motor

Using the everyday example of a car park access control system, the trainee learns the basics of a mechatronic system.

Building on this, the training program determines what function the actuators have in the controller. A DC motor is then studied in more detail as an example of a typical actuator, E.g., its structure and the laws which govern its operation. Further chapters cover speed control and the use of data sheets, as well as the transmission ratios which can be achieved by using a gearbox.

From the table of contents:
- The function of actuators in mechatronic systems
- Electric motors
- DC motor
- Torque and current
- Behavior of DC motors
- Induced voltage and speed control
- Characteristic torque/speed curve
- Working with data sheets
- Determining the transmission ratio

E.g., single license with CD-ROM/DVD

Online de/en/es/fr/el/zh

Order no.	**540953**

Network de/en/es/fr/el/zh

Order no.	**540955**

Our authoring tool:
Content Builder
Design and create your own training media

Open- and closed-loop control

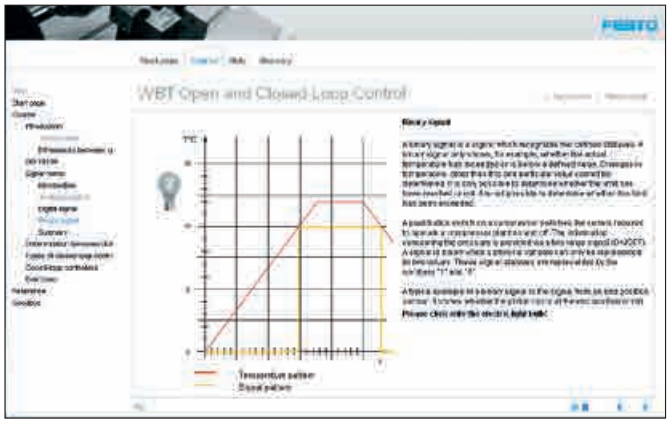

This training program uses practical examples to show the difference between open- and closed-loop control in automation. Easy-to-understand tasks are used first to examine the overall process of a simple functioning system. Later sections then look at different types of controllers, the different ways in which signals are represented and processed, and the ways in which programs are implemented.

From the table of contents:
- Differences between open- and closed-loop control (characteristics of controllers, characteristics of regulators
- DIN 19226
- Signal types
- Differences between types of control
- Signal processing (synchronous control, controlling links, asynchronous control, process control)
- Types of control (regulating to fixed values, tracking values)
- Regulators (P, I, and D controllers, combined controllers such as PI or PID controllers)

E.g., single license with CD-ROM/DVD
Online de/en/es/fr/zh

Order no.	**540947**

Network de/en/es/fr/zh

Order no.	**540949**

GRAFCET

GRAFCET – The new specification language for sequential function charts

Good documentation is a prerequisite for the quick construction and smooth commissioning of a system. As a result, products reach customers more quickly. Furthermore, the sequence description is an important tool for quickly and accurately locating and eliminating errors and thus reduces production downtimes. GRAFCET can describe what the function chart has previously been unable to represent.

It introduces the new standard step-by-step, with the aid of practice exercises.

From the table of contents:
- Definitions
- Advantages of GRAFCET
- Differentiation from PLC programming language
- Configuring a GRAFCET
- Graphical representation of the language elements
- Graphical representation of the sequential structures
- Structuring of GRAFCETS
- Case studies
- Exercises
- Glossary

E.g., single license with CD-ROM/DVD
Online de/en/es/fr/zh

Order no.	**557688**

Network de/en/es/fr/zh

Order no.	**557689**

Our authoring tool:
Content Builder
Design and create your own training media

PLC programming in accordance with IEC 61131

Programmable logic controllers (PLCs) are used to control machines and systems, and play a central role in automation.

The program of a programmable logic controller can be flexibly adapted for any task. Various programming languages, which are all based on the IEC 61131 international standard, are available for creating the control program in compliance with standards.

This training program enables users to understand with function charts, ladder diagrams, instruction lists, sequential function charts, and structured texts in five programming languages, which are presented step-by-step through the use of practice exercises.

From the table of contents:
- Programmable logic controllers
- Project organization
- Programming languages in accordance with IEC 61131
- Link-oriented programming languages
- Sequential function chart
- Structured text
- Sequence programming project

The training program provides beginners with an ideal introduction to IEC-compliant programming.

In addition to trainees, pupils and students, this training program is also useful for skilled workers, technicians, and engineers who have previously only programmed in IL, LDR, or FCH. The higher-level, IEC-compliant languages offer numerous advantages over the others.

E.g., single license with CD-ROM/DVD
Online de/en/es

Order no.	**574488**

Network de/en/es

Order no.	**574489**

LOGO! Training

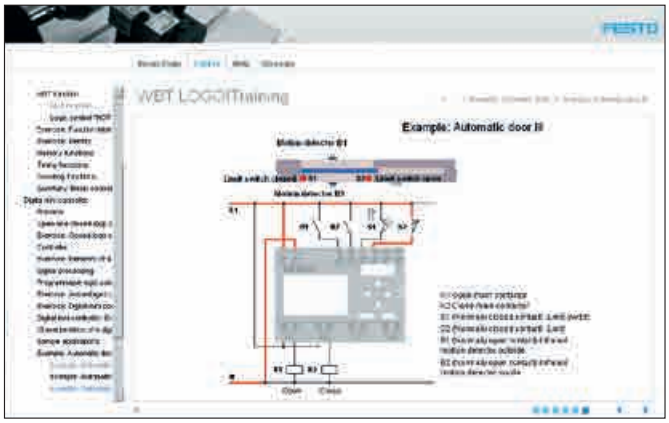

The LOGO! training program provides an introduction to logic functions, beginning with AND & OR functions and processes, which are shown in function tables. These are followed by other basic control functions, such as memory, timer, and counter functions. The next part of the course begins by covering the basics of open- and closed-loop control circuits and exploring the elements of a controller. Finally concluding with a detailed focus on the features and applications of mini-controllers.

From the table of contents:
- Basic technical functions (AND & OR function, memory function, timer function, counter function)
- Digital minicontrollers (differentiation between open- and closed-loop control)
- Control components
- Positioning with digital mini-controllers
- Design and function of a minicontroller
- Cyclical program processing
- Areas of application
- Programming languages

E.g., single license with CD-ROM/DVD
Online de/en/es/fr/zh

Order no.	**540941**

Network de/en/es/fr/zh

Order no.	**540943**

Our authoring tool:
Content Builder
Design and create your own training media

Fieldbus technology

The multimedia and interactive training program covers the basics of Fieldbus technology and is suitable for beginners who would like an overview of the subject. Animations are used to illustrate various practical examples. All relevant terms on the subject of bus technology can be found in the integrated dictionary.

From the table of contents:
- Advantages of Fieldbus systems
- The design of Fieldbus systems (different areas of application, open and closed technical concepts; such as message-oriented bus systems, user-oriented bus systems, multi-master concepts, database concepts, installation concepts)
- RS 485/RS 422 (introduction, cabling, function)
- Topology (introduction, line, ring, tree)

E.g., single license with CD-ROM/DVD
Online de/en/es/fr/zh

Order no.	**540959**

Network de/en/es/fr/zh

Order no.	**540961**

Machine Vision

Machine Vision – the use of camera systems in production – is a relatively new, but swiftly growing area in automation technology. This web-based training unit deals with industrial image processing, from the creation of images to the evaluation of the information in the picture. Working from actual practical industrial applications, students follow all the steps in the image processing project in a practical manner. The basic knowledge required is clearly explained in the individual chapters of the technical knowledge module. In the components module, cameras and lighting systems are presented using examples.

From the table of contents:
- How does a machine see?
- Steps in industrial image processing
- Image sensors: CCD and CMOS
- Focal length and lens formula
- Aperture and depth of focus
- Types of illumination: objects subject to backlighting and incident light
- Filters to improve the image
- Point operators, local and global
- Average and median filters
- Sobel operators and Laplace filters
- Process for image segmentation
- Global and local threshold processes
- Tools to calculate characteristics
- The classification of parts and characteristic curves
- Image processing and computing times
- Intelligent compact vision systems
- Lighting systems
- Sample applications of industrial vision systems

E.g., single license with CD-ROM/DVD
Online de/en/es/fr/zh

Order no.	**557691**

Network de/en/es/fr/zh

Order no.	**557692**

Safety engineering

This training program provides an introduction to the complex subject of safety engineering in industrial machines and systems.

The aim is to make participants more aware of the problems in the design aspects of safety engineering and help them understand safety engineering equipment and hazard analysis methods.

The training program is based on an amended version of the EC machinery directive 2006/42/EC.

How is the overall performance level of a technical safety measure determined? The training program explains concepts such as probability of failure (POF), diagnostic coverage (DC), common cause failure (CCF), redundancy, and diversity. A detailed explanation of all the components for safety equipment is also provided.

From the table of contents:
- Introduction to machine safety
- The question of liability (who is liable in the case of an accident?)
- European directives
- The relationship between directives and standards
- The new EU machinery directive 2006/42/EC
- The hierarchy of the European standards for machine safety
- Machine safety in the USA
- Risk assessment procedure according to EN ISO 14121 and EN ISO 12100
- Definitions
- Risk evaluation: determining the required performance level
- Risk reduction measurements: design measures, technical safety measures, instructional measures
- Selecting the safety function
- Determining the control category

E.g., single license with CD-ROM/DVD
Online de/en/es/fr/et/sv/zh

Order no.	**549766**

Network de/en/es/fr/et/sv/zh

Order no.	**549769**

Our authoring tool:
Content Builder
Design and create your own training media

Basic principles of metalworking

Whether in machine manufacturing, toolmaking or vehicle production, metalworking is an essential element in trades and industry. The "Basic principles of metalworking" series covers the basic principles of machining with geometrically defined cutting edges. Machining methods are so important because of their high accuracy and geometrically almost unlimited processing possibilities.

Turning
Turning is a cutting production method for manufacturing rotationally symmetrical workpieces. During the turning process, the workpiece performs the main rotary cutting motion and the single-edged tool, the lathe tool, performs the advancing motion. Both motions bring about continuous chip removal.

In the "Turning" training program of the "Basic principles of metalworking" series, you will acquire basic knowledge of turning.

From the table of contents:
– How does a lathe work?
– Selecting the tool
– Clamping the workpieces
– Turning

E.g., single license with CD-ROM/DVD
Online de/en/es

Order no.	**8035904**

Network de/en/es

Order no.	**8035907**

Milling
Milling is a machining method for processing metal, wood, and plastics. In the milling process, a milling tool produces flat surfaces and contours. An uninterrupted cut is characteristic of milling. Chips are removed by the rotation of the multi-blade milling tool relative to the rigidly clamped workpiece.

In the "Milling" training program of the "Basic principles of metalworking" series, you will acquire basic knowledge of milling.

From the table of contents:
– How does a milling machine work?
– Selecting the tool
– Clamping the workpieces
– Milling

E.g., single license with CD-ROM/DVD
Online de/en/es

Order no.	**8035910**

Network de/en/es

Order no.	**8035911**

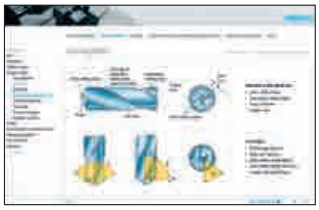

Drilling
Drilling is a machining method for producing round holes. A chip-removing cutting motion is produced by the circular cutting motion and the straight-line feed motion of the tool.

In the "Drilling" training program of the "Basic principles of metalworking" series, you will acquire basic knowledge of drilling.

From the table of contents:
– What is drilling?
– Selecting the tool
– Drilling
– Counterboring
– Reaming

E.g., single license with CD-ROM/DVD
Online de/en/es

Order no.	**8035908**

Network de/en/es

Order no.	**8035909**

Materials science
Materials are needed to produce machines, tools, and devices. Knowledge of material properties is important in selecting suitable materials.

In the "Materials science" training program of the "Basic principles of metalworking" series, you will acquire basic knowledge of turning.

From the table of contents:
– An overview of materials
– Material properties
– Types of materials
– Testing of materials

E.g., single license with CD-ROM/DVD
Online de/en/es

Order no.	**8029714**

Network de/en/es

Order no.	**8029715**

Our authoring tool:
Content Builder
Design and create your own training media

Technology and Environment

The fascination of technology
This exciting journey through the history of technology shows how inventions have changed the world, creating new forms of work: have been created: from the hunter to the engineer. "The fascination of technology" is an interactive journey through the world of automation. The program contains many different multimedia components to help you on your journey. This pure edutainment enables trainees to experience the excitement of discovery and learning!

The program consists of 4 modules:
– Technology and automation
– The history of automation technology
– Fundamentals of automation technology
– Technology and ...

E.g., single license with CD-ROM/DVD
Online de/en/es/fr/fi/sv/el/zh
Order no. **540899**
Network de/en/es/fr/fi/sv/el/zh
Order no. **540901**

Renewable energies
Day after day, lighting and other household appliances, as well as the operation of industrial machines and public transport systems, such as the underground and suburban railways, result in the consumption of enormous amounts of energy; in these cases in the form of electrical power.

There are basically three types of energy available to us for generating electrical power: fossil fuels, nuclear fuels, and renewable energy. Renewable energy is becoming more and more significant for our supply of energy, now and in the future.

This training program provides an overview of the different sources of energy with a detailed focus on renewable energy sources and how they are used.

From the table of contents:
– Solar energy
– Water power
– Wind power
– Geothermal energy
– Bio-energy
– Energy storage
– Perspectives

E.g., single license with CD-ROM/DVD
Online de/en/es/fr
Order no. **574490**
Network de/en/es/fr
Order no. **574491**

Environmental protection in the office
Environmental protection has become an essential part of modern working life. You can actively reduce your impact on the environment and the climate in your everyday work.

Our web-based training „Environmental Protection in the Office" provides you and your employees with concrete methods to make your daily working routine more environmentally friendly. Not only will this allow you to save on energy, water and office supplies but it will also help to reduce the costs of these resources.

From the table of contents:
– The carbon-neutral office
– Saving electricity
– Paper as a raw material
– Environmentally-friendly office supplies
– Sustainable waste management
– Saving and protecting water

E.g., single license with CD-ROM/DVD
Online de
Order no. **576322**
Network de
Order no. **576323**

Our authoring tool:
Content Builder
Design and create your own training media

Organization and work techniques

Project management
Successfully manage complex technical projects and systems.

Investing around 60 minutes of your time in training pays for itself many times over, through increased professionalism and confidence when managing projects. The three modules contain essential information about basic principles and provide you with lots of practical hints and tips.

From the table of contents:

Basic principles
– What is a project?
– Project planning
– Project organization
– Project documentation

Project in practice
– Analysis
– Structuring
– Time intervals and dates
– Resources
– Organization
– Documentation

Means of control
– 4-room apartment method
– S.M.A.R.T.
– Project structure plan
– Work packages and milestones
– Network planning
– Successive planning
– Time and expenditure planning
– Adherence to deadlines and capacity planning

E.g., single license with CD-ROM/DVD
Online de/en/es/fr/zh

Order no.	**540905**

Network de/en/es/fr/zh

Order no.	**540907**

Time management
Learn to optimize management of this most valuable asset, generating more time and energy for new ventures.

This 60-minute training program provides manifold benefits in return. Two modules cover the basics of time management and how to apply it to daily tasks.

From the table of contents:

Basics
– The time phenomenon
– Goal-oriented working
– Time robbers
– Biorhythms
– Day planning
– Limits of time management

Application to everyday practice
– Goals and tasks
– Definition as per S.M.A.R.T.
– Setting priorities
– Pareto principle
– ABC0 analysis
– Workplace organization
– ALPEN method

E.g., single license with CD-ROM/DVD
Online de/en/es/fr/zh

Order no.	**549767**

Network de/en/es/fr/zh

Order no.	**549771**

Internet search
Give yourself an advantage by learning quick and easy ways to search for relevant information on the World Wide Web.

In two modules, you will learn to utilise the Internet effectively as an information resource and to use search methods and tools.

From the table of contents:

The Internet as an information resource
– The right preparation
– The difference between catalogs and search engines
– Search terms and logic operations
– Using filters

Tools and methods
– Search processes
– Goal description
– Consolidation circle
– Relevance of search results
– Verification of search results
– Making content available

E.g., single license with CD-ROM/DVD
Online de/en/es/fr

Order no.	**549759**

Network de/en/es/fr

Order no.	**549763**

Lean Management/Lean Production

Value stream analysis and mapping
Those who deal with value stream analysis and value stream mapping have one goal: to create production and production processes that achieve a true value stream.

The purpose of value stream analysis is to make all the processes (from the initial request through to the delivery of the product) transparent. This can quickly highlight a significant potential for effective reshaping of processes.

From the table of contents:
– Improving the value stream
– Added value and value stream
– Value stream analysis
– Use of value stream analysis and value stream mapping
– Working with value stream mapping methods
– Overview of the ACTUAL situation
– Example: The Cycle Accessories GmbH & Co. KG
– Value stream mapping
– The seven types of waste
– The situation as it SHOULD be
– Tasks and exercises

E.g., single license with CD-ROM/DVD
Online de/en/es/fr/zh
Order no. **564623**
Network de/en/es/fr/zh
Order no. **564624**

Poka Yoke
Nowadays, Poka Yoke measures are an established part of quality assurance. Poka Yoke is a well-known principle, which originated in Japan. In Japanese, Poka Yoke means avoiding unintentional human error. Poka Yoke describes a principle that includes technical measures/equipment for preventing errors and eliminating them immediately.

Content topics:
– The story of Poka Yoke
– Inclusion of the seven types of waste
– The Poka Yoke system
– Typical examples of human error
– Basic elements of Poka Yoke
– Error-oriented approach
– Process-oriented approach
– Production-oriented approach
– Case studies
– Tasks and exercises

E.g., single license with CD-ROM/DVD
Online de/en/es/fr/zh
Order no. **565018**
Network de/en/es/fr/zh
Order no. **565019**

5S – Workstation organisation
The objective of the 5S training program is to become familiar with methods for creating ideal, exemplary, well-organized workstations (both in industrial and administrative areas), where work can be carried out without unnecessary searching, long transport distances, and waiting times (i.e., waste-free).

The basic principle of every high-quality product or service is a clean and orderly working environment. Quality, as a basic customer need, has the highest priority at such value-added locations and therefore contributes to securing the order.

Content topics:
– General basic principles
– The 5S model
– The seven types of waste
– Visualization in 5S
– The 5S audit and its application
– 5S in production
– 5S in administration
– 5S workshop procedure

E.g., single license with CD-ROM/DVD
Online de/en/es/fr/zh
Order no. **565020**
Network de/en/es/fr/zh
Order no. **565021**

TPM – Total Productive Maintenance
It is always better to act than to react. Bearing this in mind, many businesses strive to stabilize plant performance, and to introduce preventive maintenance. The term TPM stands for "Total Productive Maintenance."

The following results were achieved in industry processes thanks to the implementation of this method:
a 40% increase in operating times,
a 10% increase in machine speed,
a 95% reduction in the number of unexpected machine downtimes, a 90% reduction in the error rate as well as an increase in productivity of up to 50% and an increase of almost 200% in ROI. However, in spite of the concept being very simple, many companies fail at the implementation stage. TPM requires meticulous planning as well as interlinking with other methods of the value added system; it should also be targeted at the specific conditions of employees and machines. 20% of TPM is therefore a technical challenge, while 80% of it is an organisational challenge.

This training program explores what TPM is and how to implement this model in practice.

E.g., single license with CD-ROM/DVD
Online de/en/es/fr
Order no. **576320**
Network de/en/es/fr
Order no. **576321**

Our authoring tool:
Content Builder
Design and create your own training media

Classroom Manager

Learning management system

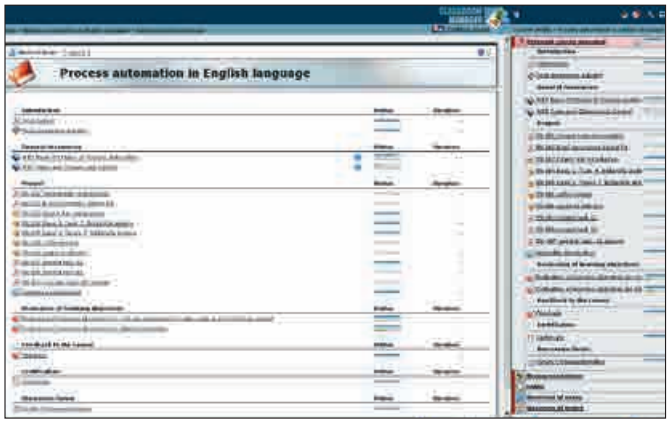

Simple, professional, affordable: The Classroom Manager learning management system

- Create and manage users and user groups
- User self-registration
- Individual assignment of training topics to users or groups
- Monitor learning progress in the tutor cockpit
- Easy integration of own resources
- Option to design own courses by using existing learning units
- Individual creation of certificates
- Support for SCORM standards 1.2 and 1.3

The Classroom Manager is the ideal platform for quick, and tailored management and implementation of online training courses. The Classroom Manager provides the user with classroom seminars, E-Learning modules, and Tec2Screen® courses as needed.

All the digital training media are compiled in a central library for direct access, greatly reducing course preparation time.

Participants are provided with the corresponding material for each session, but instructors can also create new media for tests or questionnaires as needed for the completion of courses or training sessions.

The Classroom Manager defines course structures and sets time frames, dates for attendance, training aids, access requirements and certification options. Participants and potential applicants can access this information as required.

Has everyone done their homework? The Classroom Manager also provides a clear picture of participants' learning success. With the progress monitoring system you always have an overview of course attendance and the progress of each student.

The Classroom Manager also allows students to keep an eye on their courses: the qualifications on offer are displayed clearly, and registering is quick and easy.

We've got great offers for ordering all the training programs with the Classroom Manager – take a look at the table.

Please note:
- WBTs that have already been installed from CD-ROM cannot be integrated into the Classroom Manager after installation. To do this, you will require a new version.
- The WBTs and Tec2Screen® courses are not included in the scope of delivery for the Classroom Manager. Please order separately.

Refer to the product description or the Internet for details of the WBTs and Tec2Screen® courses, as well as the available languages.

System requirements
- Windows 2000 Server (web edition) or later
- Flash Player 8.0 or later
- Administrator access is essential for installation
- In addition to Classroom Manager, a number of free open-source components need to be installed (Apache 2.x/MySQL 4.x or 5.x/PHP 4.x/Zend Optimizer). These are supplied in the installation bundle.
- For standard installation, the required ports are 80 (Apache) and 3306 (MySQL)
- The hardware should be an Intel/AMD x86 or x86-64 platform. No minimum requirements for CPU, memory or hard disk

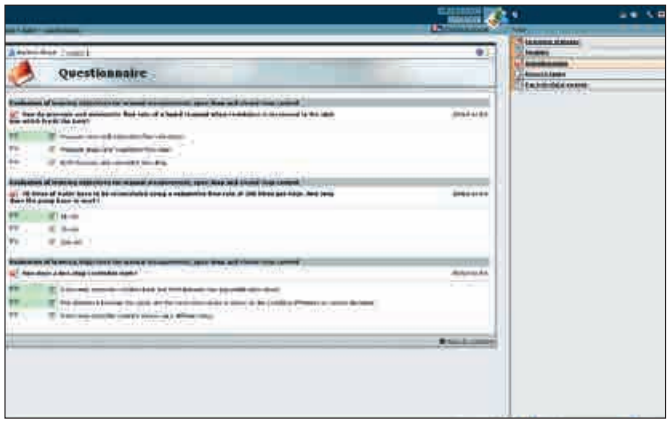

Ordering information:
– Classroom Manager (CRM) with up to 1000 named registered users on 100 workstations simultaneously
– CD-ROM with installation instructions
– Execution in de/en/fr/es/fi/sv/el/zh
– Note: The order number is configurable.

100 users at 10 workstations	**8034067**-100/10
200 users at 20 workstations	**8034067**-200/20
500 users at 50 workstations	**8034067**-500/50
1000 users at 100 workstations	**8034067**-1000/100
Campus/enterprise license	On request
ASP solution	On request

Tec2Screen® Manager 20/20 is free to download after ordering the courses/simulations. It can be used as an alternative to Classroom Manager for purchase when the learning management system is not necessary.

Software maintenance agreement for the learning management system

The software service for the Classroom Manager includes:
– Premium telephone support
– Free updates of the latest version of the software
– Agreement runs for 36 months

100 users at 10 workstations	**8028155**-100/10
200 users at 20 workstations	**8028155**-200/20
500 users at 50 workstations	**8028155**-500/50
1000 users at 100 workstations	**8028155**-1000/100

On-site training day (for Germany only)

The training content will be individually defined in consultation with the customer based on the customer's needs. For example, it could include:
– Installation of the Classroom Manager on a server
– Installation of the Content Builder (if included in the scope of delivery)
– Instruction on operation of the systems
– Installation of Apple TV® and access points (if included in the scope of delivery)
– Training in the Tec2Screen® system
– Training in the Classroom Manager

Training in DE	**8028154**
Training outside DE	On request

Available training programs	Order no. configurable
Fluid engineering	
Pneumatics	8038111
Hydraulics	8038112
Electropneumatics	8038113
Electrohydraulics	8038114
Electrical engineering	
Electrical safety measures	8038120
Electrical engineering 1	8038116
Electrical engineering 2	8038117
Electronics 1	8038118
Electronics 2	8038119
Automation technology	
Sensor technology 1	8038121
Sensor technology 2	8038122
Discover MPS® 200	8038123
Actuators – DC motor	8038124
Electric drives 1	8038125
Electric drives 2	8038126
Open- and closed-loop control	8038127
GRAFCET	8038128
PLC programming in accordance with IEC 61131	8038129
LOGO! Training	8038130
Fieldbus technology	8038131
Machine vision	8038132
Safety engineering	8038133
Process automation	8038134
Metalworking	
Turning	8038135
Milling	8038136
Drilling	8038137
Materials science	8038138
Technology and Environment	
The fascination of technology	8038139
Renewable energies	8038140
Environmental protection in the office	8038141
Organization and methods	
Project management	8038142
Time management	8038143
Internet search	8038144
Lean Management/Lean Production	
Value stream analysis and mapping	8038145
Poka Yoke	8038146
5S – Workstation organization	8038147
TPM – Total Productive Maintenance	8038148
Management and teamwork	
Customer orientation	8038149
Team Performance	8038150
Personnel management	8038151
Compliance	8038152
Training	
Safety at work	8038153
General law on equality and discrimination	8038154
Basic principles of accounting	8038155

SAP Certified
Integration with SAP Applications

my|eCampus

Learning on the Internet around the clock

Learn online on my|eCampus – the new educational portal for engineers and technology enthusiasts

my|eCampus offers engaging and informative training programs in automation technology and mechatronics. Whether school or university students, technicians, or engineers – anyone with internet access can access these topics around the clock and earn further qualifications.

Training programs on the following fundamental topics are available in German, English, French, and Spanish:
– Fluid engineering
– Manufacturing automation
– Process automation
– Electrical engineering
– Lean management
– Technology and the environment

Little or no prior technical knowledge is required to complete these classes.

Online learning via my|eCampus offers the following benefits:
– Excellent didactic and multimedia course topics
– Experts ensure quality content
– Freedom to learn anywhere and anytime at your own pace
– Saves travel time and down-time
– No need to install software
– No internal IT administration
– Versatile integrative and interactive program functions
– Educational progress is displayed

Course subscription
All training programs are offered as subscriptions, i.e., users choose which training program(s) they require for their desired qualification. The courses take at least six months, and the annual subscription provides unlimited online access to all current technical training courses.

The courses can be booked both for individual users, as well as for multiple users with multiple licenses.

Simple registration provides access to all training programs available on my|eCampus.

The LMS subscription
With a Learning Management System (LMS) subscription, courses can be provided for a group of users. In addition to the course packages available in my|eCampus, subscribers can add their own documents and content to courses.

The administrator manages the students and tracks their progress. Various course packages on different topics are available.

The configurator allows users to define courses and indicate the number of students and the course duration (either six months or one year). Over the first four weeks, a personal myleCampus coach is available for guidance through the system, as well as support and advice.

Try it! It is worthwhile for all users, not just engineers!

Access my|eCampus at:
https://festo.my-e-campus.com/

Content Builder

Design and create your own training media

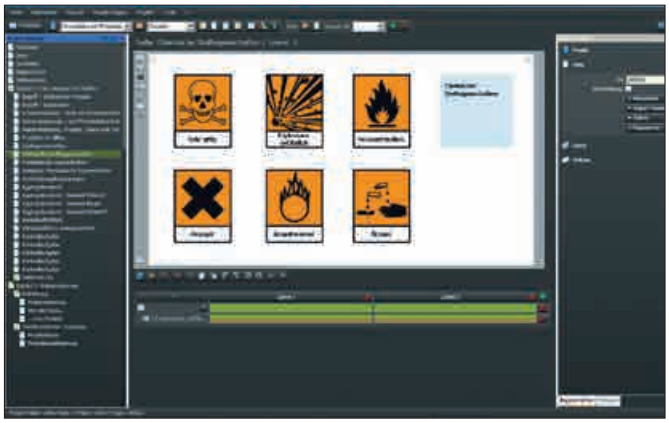

Create digital training media quickly and inexpensively

Create whole training scenarios to build and deepen knowledge!

Easy creation of exercises and tests, thanks to a wide choice of exercise types and ready-made interaction scenarios. PowerPoint import functionality allows rapid E-Learning. Together, these features enable optimized workflow in the production of training media.

The authoring tool, Content Builder, allows the development of high-quality digital training media, such as classic web-based training, Tec2Screen® courses, or material for blended learning scenarios.

Content Builder is the perfect tool for a wide range of needs, from training projects to public relations. Whether dealing with data, facts, or arguments – Content Builder can be used to communicate information in a structured and stylish way.

The numerous appealing templates provide attractive form as well as functionality, and additional content can be inserted via drag and drop, or by importing it from other digital media formats, such as PowerPoint.

Create interaction! Integrated facilities for creating interaction scenarios mean additional motivation for students. Intelligent functions allow you to produce ready-to-use results without any need for programming knowledge.

Speak many languages! The language import and export function allows you to create multilingual training media in next to no time. Texts to be translated can be easily output, and the automatic import function allows the translations to simply be inserted at the same location in text or audio formats.

Order no.	**576293**

Tec2Screen®

Connected Learning for Mechatronics and Factory Automation

The concept consists of:
- Tec2Screen® app
- Courses
- Simulations
- Tec2Screen® Manager for 20 users/workstations
- Learning management system: Classroom Manager
- Connects
- Tec2Screen® hardware
- Optional learning systems

Exciting courses for explorative learning
Videos, animations, measuring exercises, and test assignments inspire students to explore and discover. The measuring instruments integrated into the courses additionally make interactive troubleshooting exciting.

Completing the courses offline outside of the lab, is also possible, so that technical knowledge can be learned anywhere at any time.

Tec2Screen® Courses

For example:

Tec2Screen® Course – Sensors:
Inductive proximity sensors with switching output

Training content
- Design and function
- Terms that describe the switching characteristics of an inductive proximity sensor
- Relationship between design and sensing distance
- Relationship between object material and sensing distance
- and more

Further courses:
- Sensors with analog output
- Light barriers
- Light sensors
- Capacitive proximity sensors
- Magnetic proximity switches

Tec2Screen® Courses

For example:

Tec2Screen® Course – MPS® Pick&Place Station:
Troubleshooting in mechatronic systems

Training content
- General troubleshooting using the MPS® Station Pick&Place as an example
- Systematic troubleshooting in a mechatronic system
- Fault documentation and fault analysis

Further courses:
- MPS® Stacking Magazine Module – Commissioning
- MPS® Testing Station – Detection and Lifting Modules
- MPS® Processing Station – Drilling Module
- and many more

What actually is Connected Learning?

Learning methods which frequently supplement and support each other and include the following:
– Practical learning
– Classroom-based learning
– Self-learning

With **Connected Learning**, these methods are fused into a single form of learning. The virtual and the real world are seamlessly integrated. Software and hardware, theory and practice, learner and teacher – Connected Learning promotes intuitive, interactive learning.

Our patented solution for Connected Learning: **Tec2Screen®**. Fun and motivation while learning are guaranteed!

Overview of all Tec2Screen® courses at:
→ www.tec2screen.com

Understand the real world better thanks to simulations
As a component of modern training systems, the Tec2Screen® simulations can be used to test and simulate controllers and applications for PLC technology under realistic conditions. The new knowledge encourages practical and safe experimenting without real consequences or the need to purchase additional hardware.

The learning management system
The Classroom Manager manages courses and simulations, as well as self-made documents and materials. The trainer assigns these to the students individually and can simultaneously record their learning progress.

New interfaces: Connects
To explore the connection between the real and the virtual world, we have developed the Connects – plug-in interface modules with a patented interface. The Connects enable direct interaction between software and hardware, and thus direct interaction between theory and practice.

Unique: the signal flow is completely transparent and easy to follow.

The hardware
As a basic unit, the Tec2Screen® base links the iPad® with the patented Connects. The iPad® can also be used as a fully functional tablet, independently of the Tec2Screen®, in the classroom and elsewhere.

Festo Didactic won the 2015 iF Design Award for the Tec2Screen®.

iF DESIGN AWARD 2015

Tec2Screen® Courses

Sensors

Inductive proximity sensors with switching output

Training content
- Design and function
- Terms that describe the switching characteristics of an inductive proximity sensor
- Relationship between design and sensing distance
- Relationship between object material and sensing distance
- Material dependency of the sensing distance when validating different metals
- Relationship between object size (area) and sensing distance
- Influence of differently sized objects on the sensing distance

Required Connects
- 1x Digital I/O Connect
- 1x Analog In Connect
- 1x Power Connect

de/en	**8028120**

The accessories mentioned below are required to conduct the courses.

- 1x Equipment set TP 1311 Sensors for object detection
- 1x Tec2Screen® measuring unit
- 1x Supplement to the set of measuring objects, TP 1311

Sensors

Inductive sensors with analog output

Training content
- Determining the characteristic curve
- Learning about response characteristics and sensitivity
- Relationship between output voltage and object material
- Dependency of the output voltage on the material of the item to be measured and on the distance from that item
- Relationship between output voltage and object size
- Dependency of the output voltage on the size of the cross-sectional area and on the distance from the item to be measured

Required Connects
- 1x Analog In Connect
- 1x Power Connect

de/en	**8034075**

The accessories mentioned below are required to conduct the courses.

- 1x Equipment set TP 1311 Sensors for object detection
- 1x Tec2Screen® measuring unit
- 1x Supplement to the set of measuring objects, TP 1311

Sensors

Light barriers

Training content
- Through-beam sensor
- Design, function, and response characteristics with different materials
- Retro-reflective sensor
- Influence of the workpiece surface on the scanning width

Required Connects
- 1x Digital I/O Connect
- 1x Analog In Connect
- 1x Power Connect

de/en	**8028121**

The accessories mentioned below are required to conduct the courses.

- 1x Equipment set TP 1311 Sensors for object detection
- 1x Supplement to the set of objects for the light curtain, TP 1311

Sensors

Light sensors

Training content
- Diffuse sensors with background suppression
- Fibre-optic cables
- Design, function and application range

Required Connects
- 1x Connect Digital I/O
- 1x Connect Analog In
- 1x Connect Power

de/en	**8034076**

The accessories mentioned below are required to conduct the courses.

- 1x Equipment set TP 1311 Sensors for object detection
- 1x Tec2Screen® measuring unit

Tec2Screen® Manager
The Tec2Screen® Manager 20/20 is available as a free download and can be used as an alternative to Classroom Manager for purchase.

The following license levels are available for courses and simulations:
- 20 users/20 workstations

Sensors

Capacitive proximity sensors

Training content
- The setup, function, and switching characteristics of a capacitive proximity sensor.
- Relationship between object material and sensing distance
- Relationship between object material thickness and sensing distance
- Material sensing through container walls
- Effect of the container wall on the material verification
- Fill level measurement, content check

Required Connects
- 1x Connect Digital I/O
- 1x Connect Analog In
- 1x Connect Power

de/en	**8028122**

The accessories mentioned below are required to conduct the courses.

- 1x Equipment set TP 1311 Sensors for object detection
- 1x Tec2Screen® measuring unit

Sensors

Magnetic proximity switches

Training content
- Design and function of magnetic proximity switches
- Switching characteristics of magnetic proximity switches
- Selecting and aligning magnetic proximity switches
- Industrial applications for magnetic proximity switches

de/en	**8028119**

This course does not contain experiments with direct hardware interaction.

MPS® Stacking Magazine Module (Distribution Station)

Commissioning

Training content
- Commissioning the Stacking Magazine Module of the Distribution Station
- Function and applications of a Stacking Magazine in production
- Learning about the electric and pneumatic components
- Actuating a linear cylinder
- Creating the assignment list
- Adjusting the end-position switches
- Setting the one-way flow control valves
- Mounting the through-beam sensor

Required Connects
1x Connect SysLink

de/en	**8028125**

The accessories mentioned below are required to conduct the courses.

- 1x Distribution Station (Model series 2000 – 2014)
- 1x I/O data cable with SysLink connectors (IEEE 488), 2.5 m

MPS® Stacking Magazine Module (Distribution Station)

Logic programming

Training content
- Programming the Stacking Magazine Module of the Distribution Station using logic programming
- Control system structure
- Programming with function elements
- Basic logic functions (AND, OR, NOT)
- Programming motion sequences using the basic logic functions
- What are overlapping signals and how can I avoid them?
- Signal storage with memory modules – differences and correct use

Required Connects
1x Connect SysLink

de/en	**8028126**

The accessories mentioned below are required to conduct the courses.

- 1x Distribution Station (Model series 2000 – 2014)
- 1x I/O data cable with SysLink connectors (IEEE 488), 2.5 m

In addition to course and simulation management, the Classroom Manager learning management system offers comprehensive user management. It also has numerous learning management functions, such as integrating your own training media/documents and documenting progress. The following license levels are available:
- 100 users/10 workstations
- 200 users/20 workstations
- 500 users/50 workstations
- 1000 users/100 workstations

Tec2Screen® Courses

MPS® Stacking Magazine Module (Distribution/Conveyor Station)

Commissioning

Training content
- Commissioning the Stacking Magazine Module of the Distribution/Conveyor Station
- Function and applications of a Stacking Magazine in production
- Learning about the electric and pneumatic components
- Actuating a linear cylinder
- Creating the assignment list
- Adjusting the end-position switches
- Setting the one-way flow control valves
- Mounting the through-beam sensor

Required Connects
1x SysLink Connect

de/en	**8036587**

The accessories mentioned below are required to conduct the courses.

- 1x Stacking Magazine Module
- 15-pin Sub-D HD cables: connector – connector
- 1x C interface
- 1x I/O data cable with SysLink connectors (IEEE 488), 2.5 m

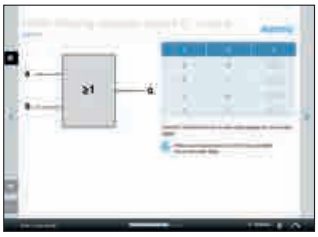

MPS® Stacking Magazine Module (Distribution/Conveyor Station)

Logic programming

Training content
- Programming the Stacking Magazine Module of the Distribution/Conveyor Station using logic programming
- Function and applications of a Stacking Magazine in production
- Learning about the electric and pneumatic components
- Actuating a linear cylinder
- Creating the assignment list
- Adjusting the end-position switches
- Setting the one-way flow control valves
- Mounting the through-beam sensor

Required Connects
1x SysLink Connect

de/en	**8036588**

The accessories mentioned below are required to conduct the courses.

- 1x Stacking Magazine Module
- 15-pin Sub-D HD cables connector – connector
- 1x C interface
- 1x I/O data cable with SysLink connectors (IEEE 488), 2.5 m

MPS® Changer Module (Distribution Station)

Commissioning

Training content
- Commissioning the Changer Module
- Function and applications of a changer in production
- Learning about the electric and pneumatic components
- Correct actuation of a rotary cylinder
- Creating the assignment list
- Adjusting the end-position switches
- Setting the one-way flow control valves

Required Connects
1x SysLink Connect

de/en	**8028127**

The accessories mentioned below are required to conduct the courses.

- 1x Distribution Station (Model series 2000 – 2014)
- 1x I/O data cable with SysLink connectors (IEEE 488), 2.5 m

MPS® Changer Module (Distribution Station)

Logic programming

Training content
- Commissioning the Changer Module
- Control system structure
- Programming with function elements
- Basic logic functions (AND, OR, NOT)
- Programming motion sequences using the basic logic functions
- What are overlapping signals and how can I avoid them?
- Signal storage with memory modules – differences and correct use

Required Connects
1x SysLink Connect

de/en	**8028128**

The accessories mentioned below are required to conduct the courses.

- 1x Distribution Station (Model series 2000 – 2014)
- 1x I/O data cable with SysLink connectors (IEEE 488), 2.5 m

Tec2Screen® Manager
The Tec2Screen® Manager 20/20 is available as a free download and can be used as an alternative to Classroom Manager for purchase.

The following license levels are available for courses and simulations:
- 20 users/20 workstations

MPS® Processing Station

Commissioning

Training content
- Commissioning the Processing Station and its modules
- Learning about the components of the Processing Station Modules
- Learning about and describing the design and function of the modules and components, and using them in a different context
- Adjusting the individual components

Required Connects
1x SysLink Connect

de/en	**8046988**

The accessories mentioned below are required to conduct the courses.

- 1x Processing Station (Model series 2000 – 2014)
- 1x I/O data cable with SysLink connectors (IEEE 488), 2.5 m

MPS® Pick&Place Station

Commissioning

Training content
- Commissioning the Pick&Place Station with SysLink
- Learning about the requirements for safe use of the station
- Learning about practical applications of Pick&Place
- Learning about the functions of the station
- Commissioning and learning about the station modules
- Learning about the intended sequence for the station
- Adjusting the station sensors

Required Connects
1x SysLink Connect

de/en	**8046992**

The accessories mentioned below are required to conduct the courses.

- 1x Pick&Place Station (Model series 2000 – 2014)
- 1x I/O data cable with SysLink connectors (IEEE 488), 2.5 m

MPS® Testing Station

Commissioning

Training content
- Commissioning the Testing Station
- Design, function and commissioning of the Detection, Lifting, Slide, and Measuring Modules
- Practical, hands-on exercises at the station to further develop knowledge

Required Connects
1x SysLink Connect

de/en	**8046970**

The accessories mentioned below are required to conduct the courses.

- 1x Testing Station (Model series 2000 – 2014)
- 1x I/O data cable with SysLink connectors (IEEE 488), 2.5 m

MPS® Testing Station, Detection and Lifting Modules

Logic programming

Training content
- Using logic programming to program the Detection and Lifting Modules
- Programming and testing simple and advanced logic control systems with the Detection and Lifting Modules
- Learning about and using the logic functions
  - AND, NOT, OR, and NAND
  - RS flip-flop, SR flip-flop (memory modules)
  - Timer
  - Counter

Required Connects
1x SysLink Connect

de/en	**8046989**

The accessories mentioned below are required to conduct the courses.

- 1x Testing Station (Model series 2000 – 2014)
- 1x I/O data cable with SysLink connectors (IEEE 488), 2.5 m

In addition to course and simulation management, the Classroom Manager learning management system offers comprehensive user management. It also has numerous learning management functions, such as integrating your own training media/documents and documenting progress. The following license levels are available:
- 100 users/10 workstations
- 200 users/20 workstations
- 500 users/50 workstations
- 1000 users/100 workstations

Tec2Screen® Courses

MPS® Testing Station, Measuring and Lifting Modules

Logic programming

Training content
- Using logic programming to program the Measuring and Lifting modules
- Programming and testing simple and advanced logic control systems with the Measuring and Lifting Modules
- Learning about and using the logic functions
  - AND, NOT, OR, and NAND
  - RS flip-flop, SR flip-flop (memory modules)
  - Timer
  - Counter

Required Connects
1x SysLink Connect

de/en	**8046990**

The accessories mentioned below are required to conduct the courses.

- 1x Testing Station (Model series 2000 – 2014)
- 1x I/O data cable with SysLink connectors (IEEE 488), 2.5 m

MPS® Pick&Place Station, Troubleshooting in mechatronic systems

Training content
- General troubleshooting using the MPS® Pick&Place Station as an example
- Systematic troubleshooting in a mechatronic system
- Fault documentation and fault analysis

Required Connects
1x SysLink Connect

de/en	**8046999**

The accessories mentioned below are required to conduct the courses.

- 1x Pick&Place Station (Model series 2000 – 2014)
- 1x I/O data cable with SysLink connectors (IEEE 488), 2.5 m

MPS® Processing Station, Rotary Indexing Table Module

Logic programming

Training content
- Programming and testing logic control systems with the Testing and Rotary Indexing Table Modules
- Learning the basic logic functions RS flip-flop (memory module), timer, and counter
- Identify and correct errors in the logic control system

Required Connects
1x SysLink Connect

de/en	**8046995**

The accessories mentioned below are required to conduct the courses.

- 1x Processing Station (Model series 2000 – 2014)
- 1x I/O data cable with SysLink connectors (IEEE 488), 2.5 m

MPS® Processing Station, Drilling Module

Logic programming

Training content
- Programming and testing logic control systems with the Clamping and Drilling Modules
- Learning the basic logic functions RS flip-flop (memory module) and timer
- Identify and correct errors in a given logic control sequence

Required Connects
1x SysLink Connect

de/en	**8046996**

The accessories mentioned below are required to conduct the courses.

- 1x Processing Station (Model series 2000 – 2014)
- 1x I/O data cable with SysLink connectors (IEEE 488), 2.5 m

Tec2Screen® Manager
The Tec2Screen® Manager 20/20 is available as a free download and can be used as an alternative to Classroom Manager for purchase.

The following license levels are available for courses and simulations:
- 20 users/20 workstations

MPS® Pick&Place Station, Pick&Place Module

Logic programming

Training content
- Programming and testing logic control systems with the Pick&Place Module
- Learning the basic logic functions RS flip-flop and SR flip-flop (memory module)
- Becoming familiar with the basic logic function Timer (time module)
- Apply these basic logic functions
- Expand an existing logic control system with new functions

Required Connects
1x SysLink Connect

de/en	**8046997**

The accessories mentioned below are required to conduct the courses.

- 1x Pick&Place Station (Model series 2000 – 2014)
- 1x I/O data cable with SysLink connectors (IEEE 488), 2.5 m

MPS® Pick&Place Station, Conveyor Module

Logic programming

Training content
- Programming and testing logic control systems with the Conveyor Module
- Learning the basic logic function RS flip-flop (memory module)
- Becoming familiar with the basic logic functions RS flip-flop, SR flip-flop (memory modules), Timer, and XOR (exclusive or)

Required Connects
1x SysLink Connect

de/en	**8046998**

The accessories mentioned below are required to conduct the courses.

- 1x Pick&Place Station (Model series 2000 – 2014)
- 1x I/O data cable with SysLink connectors (IEEE 488), 2.5 m

MPS® Conveyor Station

Commissioning

Training content
- Starting up the MPS® Conveyor Module and its components
- Inspecting the set-up
- Identifying components in a circuit diagram and inspecting wiring
- Becoming familiar with testing, and aligning sensors (reflex light sensor, one-way light barrier)
- Testing and calibrating drive function (DC motor with transfer conveyor, solenoid with feed separator)

Required Connects
1x 15-pin D-sub HD Connect

de/en	**8034071**

The accessories mentioned below are required to conduct the courses.

- 1x Conveyor Station
- 1x 15-pin D-sub HD Connector, 2 m

MPS® Conveyor Station

Logic programming

Training content
- Creating an assignment list based on the circuit diagram
- Using logic programming as a simple programming method
- Learning and programming logic functions
- Learning and programming memory functions, timers (switch-on and switch-off delay), and counters
- Editing simple controller programs
- Learning and applying a method for creating a controller program that meets requirements

Required Connects
1x 15-pin D-sub HD Connect

de/en	**8034072**

The accessories mentioned below are required to conduct the courses.

- 1x Conveyor Station
- 1x 15-pin D-sub HD Connector, 2 m

In addition to course and simulation management, the Classroom Manager learning management system offers comprehensive user management. It also has numerous learning management functions, such as integrating your own training media/documents and documenting progress. The following license levels are available:
- 100 users/10 workstations
- 200 users/20 workstations
- 500 users/50 workstations
- 1000 users/100 workstations

Tec2Screen® Simulations

7-segment display
The 7-segment display is used to graphically represent numbers and letters using seven segments. The numbers and letters are actuated directly (binary) or via a HEX module. This simulation uses logic programming to teach the user about different data formats (binary, BCD, HEX).

Training content
– Actuation of a 7-segment display
– Data formats (binary, BCD, HEX)

Required Connects
3x Digital I/O Connect

Required accessories
Programmable logic controller,
E.g., in the EduTrainer® Universal or EduTrainer® Compact, with at least:
– 2 digital inputs
– 9 digital outputs

de/en/es/fr **8028130**

Traffic light-controlled junction
Traffic lights at a junction control the flow of traffic in all directions. Demand-controlled pedestrian lights allow pedestrians to cross the road safely. The objective is to switch the lights for vehicles to red after a button is pressed to enable the pedestrians to cross the road safely.

Training content
– Complex sequence control systems with sequencers

Required Connects
3x Digital I/O Connect

Required accessories
Programmable logic controller,
E.g., in the EduTrainer® Universal or EduTrainer® Compact, with at least:
– 1 digital input
– 9 digital outputs

de/en/es/fr **8034101**

Belt control systems
Two conveyors feed bulk material onto a third belt. The infeed conveyors are actuated via a control console, with the operating status indicated by LEDs. The outfeed conveyor starts or stops automatically when the infeed conveyors are operating. Touching and holding a conveyor simulates a fault. The conveyor then stops and outputs an error message in the control console.

Training content
– Dependencies and timing

Required Connects
4x Digital I/O Connect

Required accessories
Programmable logic controller,
E.g., in the EduTrainer® Universal or EduTrainer® Compact, with at least:
– 2 digital inputs
– 9 digital outputs

de/en/es/fr **8028137**

Closed-loop level control
A heating coil in a water heater heats water to a temperature within a specified range. A thermometer measures the current water temperature and maintains the temperature above the minimum and below the maximum by switching the heating coil. Additionally, four proximity sensors monitor the level and control the water supply via two solenoid-actuated shut-off valves. Touching the tap decreases the water level.

Training content
– Closed-loop control based on disturbance variables

Required Connects
3x Digital I/O Connect

Required accessories
Programmable logic controller,
E.g., in the EduTrainer® Universal or EduTrainer® Compact, with at least:
– 6 digital inputs
– 6 digital outputs

de/en/es/fr **8028143**

Tec2Screen® Manager
The Tec2Screen® Manager 20/20 is available as a free download and can be used as an alternative to Classroom Manager for purchase.

The following license levels are available for courses and simulations:
– 20 users/20 workstations

Pedestrian lights system
A pedestrian lights system is switched at the press of a button. The objective is to switch the lights for vehicles to red after a button is pressed to enable the pedestrians to cross the road safely.

Training content
– Simple sequence control systems with sequencers

Required Connects
2x Digital I/O Connect

Required accessories
Programmable logic controller, E.g., in the EduTrainer® Universal or EduTrainer® Compact, with at least:
– 1 digital input
– 6 digital outputs

de/en/es/fr **8028136**

Handling device
A two-axis handling device transports workpieces into a clamping device. The handling device is composed of a pneumatic linear axis, a double-acting stroke cylinder, and a parallel gripper. Proximity sensors for determining the end positions are located on the linear axis and the stroke cylinder.

Training content
– 2-axis, pneumatic, with possibility of collision
– Collision avoidance

Required Connects
3x Digital I/O Connect

Required accessories
Programmable logic controller, E.g., in the EduTrainer® Universal or EduTrainer® Compact, with at least:
– 5 digital inputs
– 4 digital outputs

de/en/es/fr **8034103**

Incremental encoder
An incremental encoder is a system composed of numerous sensors for determining changes in position, in this case, of the direction of rotation. Three inductive proximity sensors generate signals using the two toothed discs; these signals are used to determine the direction of rotation of the motor.

Training content
– Mode of operation of an incremental encoder
– Programmatic evaluation of incremental encoder signals

Required Connects
3x Digital I/O Connect

Required accessories
Programmable logic controller, E.g., in the EduTrainer® Universal or EduTrainer® Compact, with at least:
– 3 digital inputs
– 8 digital outputs

de/en/es/fr **8028132**

Coffee vending machine
A coffee vending machine offers various coffee mixed drinks to choose from. The feed separator releases a cup after the appropriate selection is made. A sensor detects the cup once it reaches the filling position and forwards the filling signal to the controller. This then controls the filling process based on the preset filling recipe.

Training content
– Data modules and recipes

Required Connects
3x Digital I/O Connect

Required accessories
Programmable logic controller, E.g., in the EduTrainer® Universal or EduTrainer® Compact, with at least:
– 4 digital inputs
– 8 digital outputs

de/en/es/fr **8028140**

In addition to course and simulation management, the Classroom Manager learning management system offers comprehensive user management. It also has numerous learning management functions, such as integrating your own training media/documents and documenting progress. The following license levels are available:
– 100 users/10 workstations
– 200 users/20 workstations
– 500 users/50 workstations
– 1000 users/100 workstations

Tec2Screen® Simulations

Coding switch
The coding switch connects a specific output as a function of the input signal. A value is entered via two selector switches. A timer is actuated for visualization. Values from 00DEC to 99DEC or from 00HEX to FFHEX can be entered in this timer depending on the selected time system.

Training content
– Interrogation of a coding switch
– Data formats (binary, BCD, HEX)

Required Connects
3x Digital I/O Connect

Required accessories
Programmable logic controller,
E.g., in the EduTrainer® Universal or EduTrainer® Compact, with at least:
– 9 digital inputs
– 1 digital output

de/en/es/fr **8028131**

Linear axis
Electric linear axes approach previously defined points with high positional accuracy using a rotary spindle. The linear axis is actuated by a motor controller that can be switched between forward and reverse operation, as well as between two travel speeds. Three proximity sensors detect the precise position of the slide.

Training content
– 2-axis, pneumatic, with possibility of collision
– Collision avoidance

Required Connects
2x Digital I/O Connect

Required accessories
Programmable logic controller,
E.g., in the EduTrainer® Universal or EduTrainer® Compact, with at least:
– 3 digital inputs
– 4 digital outputs

de/en/es/fr **8028134**

Motor speed adjustment
A DC motor drives a sanding disc whose speed can be adjusted to three levels between zero and 2000 rpm. Pressing a broach against the sanding disc simulates a load which reduces the rotational speed as a function of the contact pressure. The control console shows the resultant deviation from the specified rotational speed as a percentage.

Training content
– Speed adjustment based on disturbance variable and setpoint jumps

Required Connects
– 1x Digital I/O Connect
– 1x Analog In Connect
– 1x Analog Out Connect

Required accessories
Programmable logic controller,
E.g., in the EduTrainer® Universal or EduTrainer® Compact, with at least:
– 1 digital input
– 1 digital output
– 2 analog inputs
– 1 analog output

de/en/es/fr **8028142**

Furnace door control system
A hydraulic cylinder controlled via pushbuttons on a control console opens and closes the door of a hardening furnace. To avoid dangerous situations, a light curtain monitors the furnace opening and stops the travel if a light beam is interrupted.

Training content
– Simple logic operations

Required Connects
2x Digital I/O Connect

Required accessories
Programmable logic controller,
E.g., in the EduTrainer® Universal or EduTrainer® Compact, with at least:
– 6 digital inputs
– 2 digital outputs

de/en/es/fr **8028138**

Tec2Screen® Manager
The Tec2Screen® Manager 20/20 is available as a free download and can be used as an alternative to Classroom Manager for purchase.

The following license levels are available for courses and simulations:
– 20 users/20 workstations

Pallet transport system
A transporting slide carrying workpiece blanks moves under a drilling jig. The workpieces are located using a stopper and workpiece clamps. Spiral drills drill a defined hole pattern as a function of the workpiece identifier, interrogated by inductive sensors.

Training content
– Simple sequence control system with sequencers

Required Connects
3x Digital I/O Connect

Required accessories
Programmable logic controller, E.g., in the EduTrainer® Universal or EduTrainer® Compact, with at least:
– 8 digital inputs
– 4 digital outputs

de/en/es/fr **8028135**

Car park control system
A cabinet system controls transits in a car park with one entrance and one exit. The car park has space for 15 vehicles. The occupied spaces are displayed in the overview. Touching the parking ticket switch allows vehicles to drive into or out of the car park.

Training content
– Sequencers and counters

Required Connects
– 4x Digital I/O Connect
or
– 1x SysLink Connect

Required accessories
Programmable logic controller, E.g., in the EduTrainer® Universal or EduTrainer® Compact, with at least:
– 8 digital inputs
– 8 digital outputs

de/en/es/fr **8028139**

Sorting system
The sorting system distributes workpieces detected by the diffuse sensor at the start of the conveyor to three chutes. Two sensors upstream of the barrier detect the color and material of the workpieces (black, red, metal) in order to then distribute them to the corresponding chutes via electromagnetically operated shunts. A retro-reflective sensor additionally monitors the level of the chutes.

Training content
– Sequencers and dependencies

Required Connects
3x Digital I/O Connect

Required accessories
Programmable logic controller, E.g., in the EduTrainer® Universal or EduTrainer® Compact, with at least:
– 6 digital inputs
– 4 digital outputs

de/en/es/fr **8028133**

Tunnel furnace
A conveyor transports workpieces through a tunnel furnace. The workpieces remain in the tunnel furnace for a specified time in order to reach the required temperature. To maintain the fixed oven temperature, a sensor measures the temperature and forwards its output signal to a controller. This controls the temperature in the furnace by switching the electric heater on and off in order to compensate for heat loss.

Training content
– Closed-loop control based on disturbance variables

Required Connects
– 1x Digital I/O Connect
– 1x Analog Out Connect

Required accessories
Programmable logic controller, E.g., in the EduTrainer® Universal or EduTrainer® Compact, with at least:
– 1 analog input
– 1 digital output

de/en/es/fr **8028141**

In addition to course and simulation management, the Classroom Manager learning management system offers comprehensive user management. It also has numerous learning management functions, such as integrating your own training media/documents and documenting progress. The following license levels are available:
– 100 users/10 workstations
– 200 users/20 workstations
– 500 users/50 workstations
– 1000 users/100 workstations

FluidSIM® 5

Pneumatics/Hydraulics/Electrical engineering

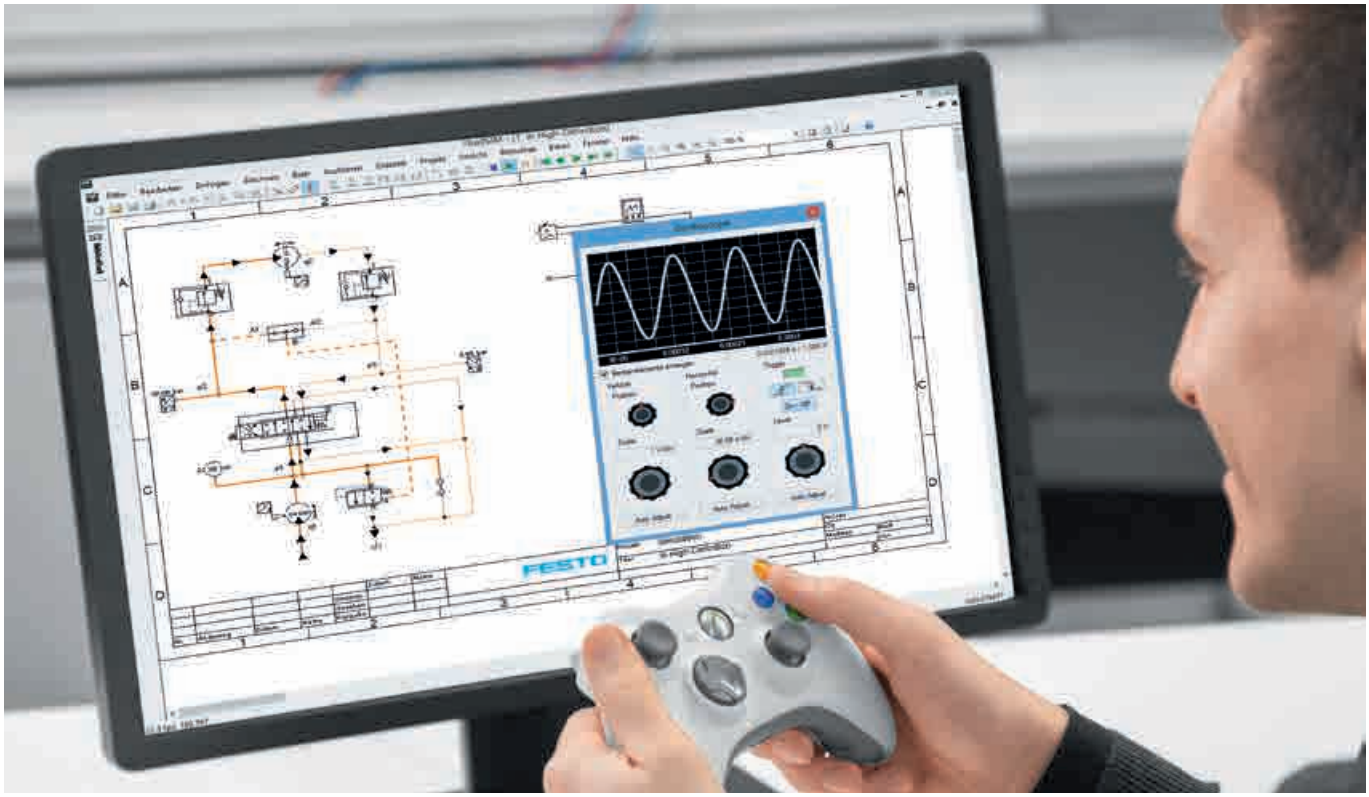

For more than 20 years, FluidSIM® has been the world's leading circuit diagram design and simulation program for pneumatics, hydraulics, and now also for electrical engineering. Being able to freely design control systems is motivating, and promotes creativity and focus. Beyond that, FluidSIM® provides teachers with a wealth of text, images, and videos for multimedia-based lesson planning. Experience real-time simulations with apprentices, specialists, or students and celebrate successful learning at all levels!

One tool for all needs
As a teacher and trainer, you are the expert who masters tasks that are needed to prepare effective lessons, which is why FluidSIM® 5 offers the expert mode. Your trainees should initially concentrate on the essentials. They can work and learn successfully in the standard mode, which has a reduced range of functions and offers advantages for the learning process.

Testing in real time
Whether in a training environment or in an engineering office, the simulation of control systems and processes has long been standard in industry, helping to minimize losses due to crashes and ensuring greater efficiency and improved quality. The parameters of all components are identical to those of the training packages from Festo Didactic and can be fully adapted to the characteristics of other components.

The many aspects of GRAFCET
GRAFCET long-ago replaced the displacement-step diagram in training. FluidSIM® 5 does even more with GRAFCET:
- Editing – for documentation conforming to standards
- Visualizing – for maximum clarity
- Monitoring – colored signals indicate where the process is running correctly or not at all
- Control – for manufacturer-neutral control of all fluid systems and electrical systems

Speed made visible
The new simulation core of FluidSIM® 5 achieves simulation rates up to 10 kHz. The parameters of all actuators can be precisely adjusted. FluidSIM® 5 writes the simulation results in millisecond cycles and delivers them as a text file! The new simulated oscilloscopes make frequencies up to 100 kHz visible.

Learning with fun and success
Theory is necessary for learning, but real practice provides motivation and promotes successful learning! In many situations, FluidSIM® 5 can easily be used as a controller for the real system: the EasyPort makes it possible – convenient, digital; and analog! New: with the joystick, FluidSIM® 5 is not only fun, but it now also allows several switches and valves to be operated simultaneously.

Wide range – maximum convenience
Pneumatics, hydraulics, electrical engineering: the libraries are available separately or together in the same program. The user decides which of the libraries to use in the program. All technologies interact optimally in a circuit diagram or project.

Flexible installation and use
Online registration, network license, usage at home: FluidSIM® 5 offers many license models that facilitate economical learning scenarios in a school or in a company. A new learner administration function even allows you to provide and monitor licenses for learning groups and to use the software at home.

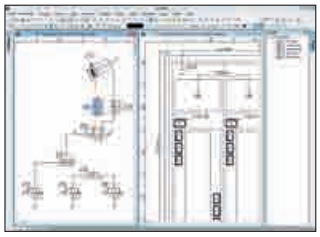

Professional CAD according to standards
- Convenient drawing with alignment lines and new snap functions
- Easy insertion of new symbols into existing connections
- Variable drawing frames
- Continuous scaling and rotation
- Dimensioning functions
- Intersection calculation of lines, rectangles, and ellipses

Completely according to standards
- All symbols to DIN ISO 1219 or DIN EN 81346-2
- Connection identification according to new equipment identifier
- GRAFCET according to the current standard

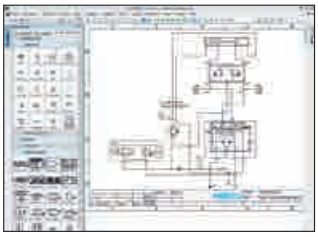

Libraries for new technologies
- Libraries for all levels of pneumatics and hydraulics training packages, including control technology and proportional technology
- New: drives in pneumatics
- Vacuum technology
- Sensors in pneumatics
- Safety in pneumatic systems
- Mobile hydraulics
- Electrical engineering, electronics
- Circuits with contacts

GRAFCET in various modes
- GrafEdit: create GRAFCETs in compliance with the standard
- GrafView: visualize the control sequence represented as a GRAFCET
- GrafControl: control the process with the GRAFCET, including error simulation and process monitoring
- GrafPLC

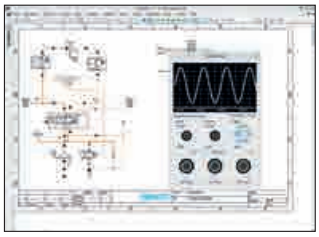

Simulation in high definition
- Signal processing up to 10 kHz
- Virtual oscilloscope for frequencies up to 100 kHz
- Simultaneous simulation of all circuits in a project
- Simulated values can be shown at run-time
- Several switches can be operated with the joystick

Learning material included
- Slides, pictures, animations, sectional drawings, video sequences
- Description of the physical-mathematical simulation models
- Training program for FluidSIM® beginners
- Details of all components at the push of a button
- Completed sample presentations for your training course
- Language changeover at run-time
- Multilingual (standard German/English)

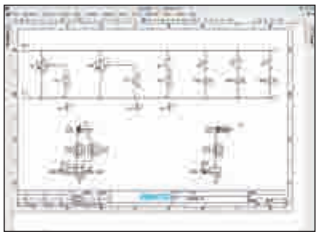

Convenient documentation
- Project administration, drawing sheets
- Individual drawing frames in all sizes
- Automatic bills of materials, flow path numbering, switching element tables, terminal diagrams, cables, wiring lists, and tubing lists
- Exports into all common formats

FluidSIM® for homework
- New expansion for administering external users over the Internet
- Administration of learning groups
- Integrated chat functions
- Simple administration by the tutor

Pneumatics

Local installation,
single license de/en/es/fr/pt/ro/ru

Order no.	**8024357**

Network installation,
single license de/en/es/fr/pt/ro/ru

Order no.	**8024360**

Hydraulics

Local installation,
single license de/en/es/fr/pt/ro/ru

Order no.	**8024358**

Network installation,
single license de/en/es/fr/pt/ro/ru

Order no.	**8024361**

Electrical engineering

Local installation,
single license de/en/es/fr/pt/ro/ru

Order no.	**8024359**

Network installation,
single license de/en/es/fr/pt/ro/ru

Order no.	**8024362**

Recommended accessories:
X-Box controller

with cable	8026542
without cable	8032252

System requirements
- Windows XP, Vista, 7, 8 or 10
- Processor with at least 1 gigahertz
- At least 1 GB RAM
- Dual core processor (recommended)

We can meet your needs
Multiple licenses for local or network installation with as many licenses as necessary.

New languages – free of charge
In the future, you will receive new language variants free of charge on the Internet. They can be integrated into your existing version via an update.

Visit us on the Internet
There you will find all the information you need on currently available versions and updates for existing FluidSIM® users.

CIROS®

Professional training in virtual learning environments

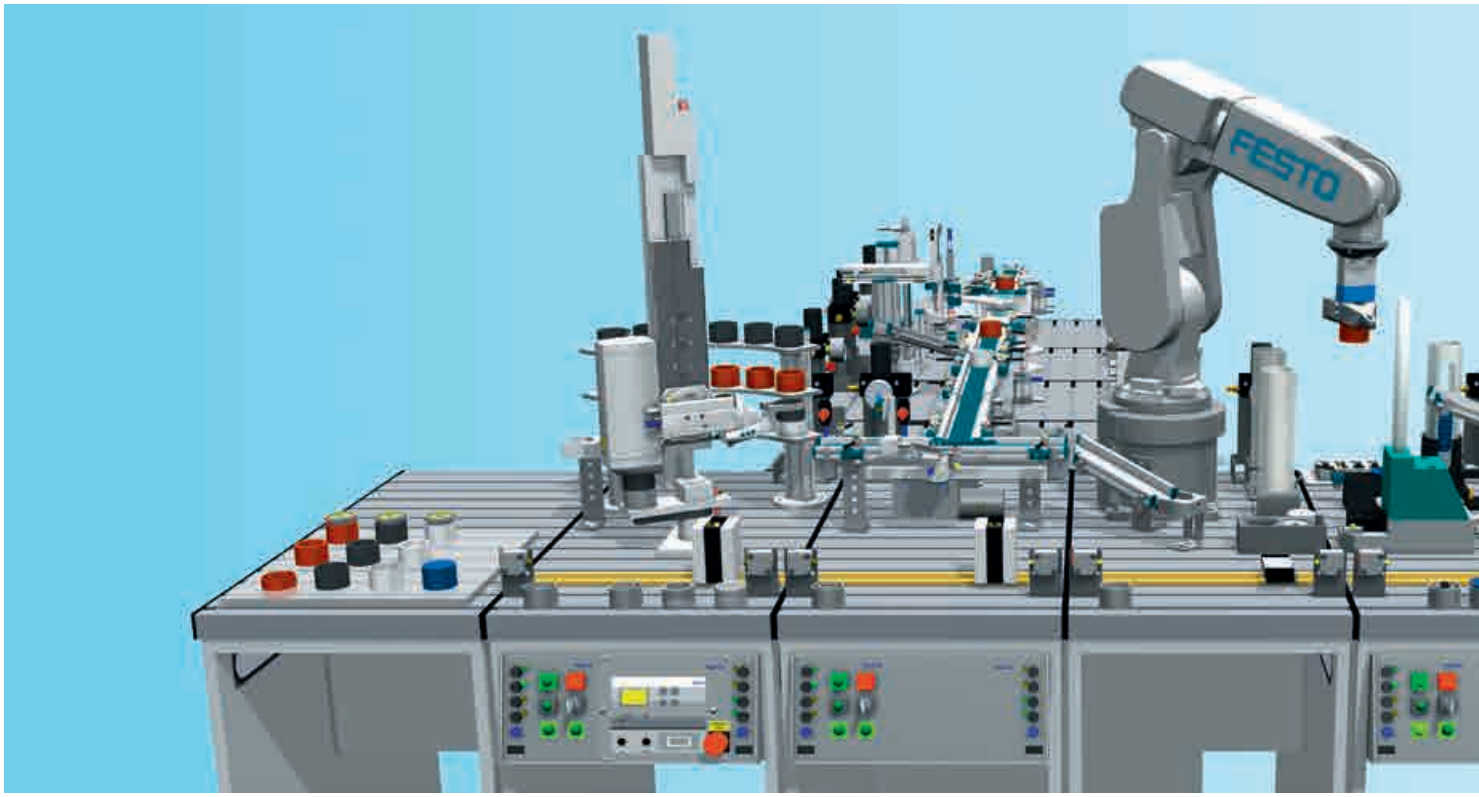

The fascination of 3D simulation

Modern PC technology allows us to create realistic 3D simulations even for the most complex automation systems. Participants discover the kinetic dynamism of mechatronic systems using virtual reality – without any risk to human or machine. This allows users to take a step into automation technology without any worries, providing a great motivational boost.

Working and learning methods have changed – and CIROS® supports these new methods. With a focus on visual learning, the appealing virtual representations encourage and motivate the full learning process.

Industrial practice
Today, simulation represents an important tool in production and product development in order to quickly and cost-effectively analyze new solutions, methods, and processes. Depending on the task in question, the simulation systems used differ from each other in terms of the level of detail of the information to be obtained and the way in which it is calculated.

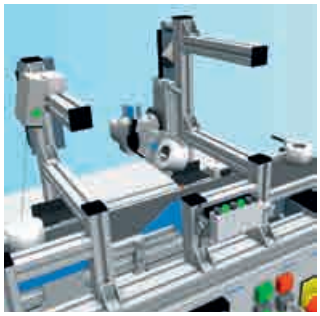

Flexible learning
Realistic, simulated learning systems expand the training possibilities where real automation systems might reach their limits, allowing new training content and scenarios to be covered through simulation.

Safe commissioning
Large, fast, and cost-intensive equipment is used in mechatronic systems. Training on this equipment risks the high cost of repair as well as the safety of students. However, the learning and commissioning of robots, linear axes, and transport systems within the simulated production environment is completely without risk for both students and equipment.

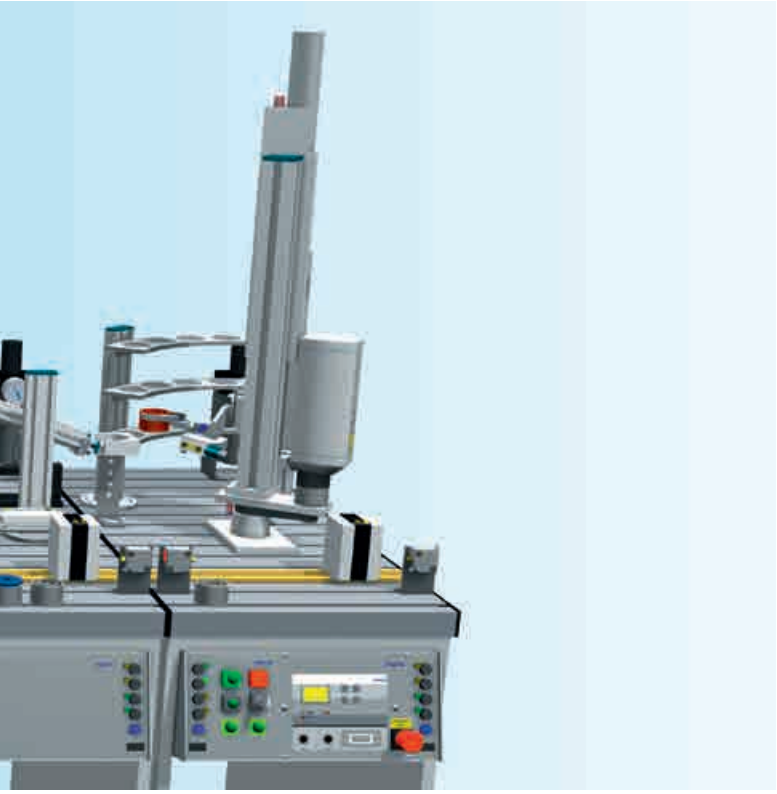

CIROS® –
the universal
3D simulation system,
Made in Germany

The flexibility provided by CIROS® makes it suitable for many different fields of application. It is available in a variety of price ranges with different options and configurations, and is efficient and convenient to use on a daily basis.

CIROS® covers a great number of applications, ranging from the use of 3D simulation in basic and further training, to the implementation of the digital factory in industrial companies, and right up to real-time simulations of complex virtual worlds.

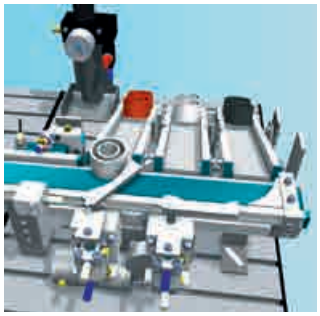

Easy fault-insertion
A simple click of the mouse in the simulation is all that is needed to put a pneumatic cylinder or an inductive sensor into a fault state. This opens up new learning situations in which students can be trained in systematically searching for faults.

Putting simulation to use
While virtually commissioning industry control systems and robots, students can use the system simulation to develop sequencing and motion programs, which can then be transferred to the control systems already in place.

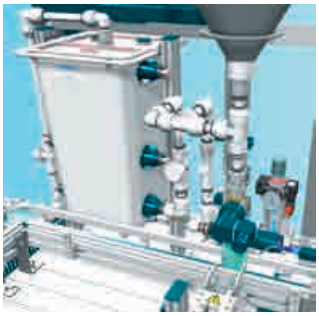

Unlimited use
Today, students require minimum effort to quickly be able use simulation programs. The programs are always fully functional, since simulated equipment doesn't break down, and identical simulated conditions apply for all students. So, simulations are not only cost-effective, but they provide user uniformity. Additionally, simulation technology can be used for almost any application.

Ready to use immediately
Once CIROS® has been installed, over 150 simulation models from the factory and process automation sector are included and available for immediate pedagogical use. Extensive model documentation is also available on demand.

CIROS® Studio
Creating virtual learning environments

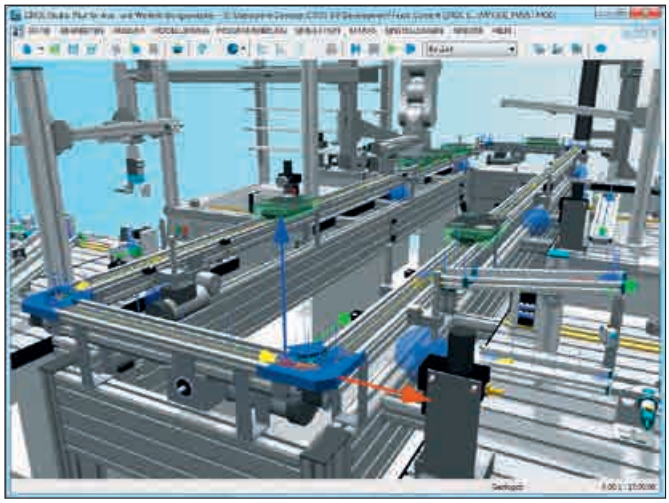

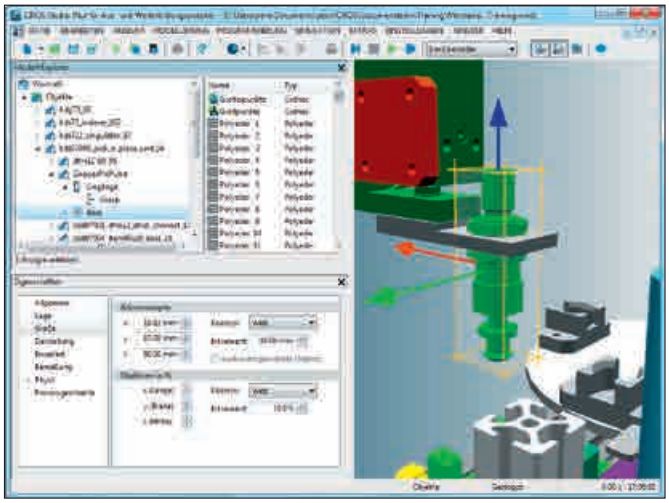

CIROS® Studio is the professional tool for creating simulation models. The industrially utilised, powerful development platform unites the three tools Simulation, Modelling and Programming under one common interface.

3D modeling based on standardized import filters for external CAD systems:
– Import filters for STEP, IGES, VRML, and STL
– Basic CAD functions
– Definition of local coordinate systems (Master Frames) for simple relative positioning of objects
– Modelling through parameterization of the geometry, the kinematics, and the material and physical characteristics
– Libraries with industrial robot systems and numerous automation components
– Library with powerful automation mechanisms
– Export filters for DXF, STEP, IGES, VRML, and STL

3D real-time simulation, including simulation of physical effects, transport simulation, simulation of hose connections and energy chains, error simulation, and sensor simulation. All 3D objects are controlled by an integrated virtual control systems via mechanical or electrical interfaces, allowing realistic experiments and analyses:
– Transport is used for the flexible design of any transport process and is a very powerful extension of the core of the 3D simulation.
– Collision detection through colour change or warning messages with/without acknowledgement. Simple selection of the objects that are to be checked for collision.
– Sensor simulation: Almost all sensors, from the inductive sensor to the camera, are reproduced with their physical characteristics.
– Error simulation: Creation of error states as learning scenarios for strategic troubleshooting and rectification of operating errors.
– Multitasking of virtual control systems: Process models can be controlled in parallel by a number of robots and/or PLCs.
– OPC client with configuration menu for communication with any number of OPC servers for connection of any number of PLCs.

Robot programming that supports different programming languages:
– IRL (DIN 66312)
– Movemaster Command, MELFA BASIC III, IV, and V for Mitsubishi robots
– KRL for KUKA robots
– RAPID for ABB robots
– V+ for Adept and Stäubli robots
– Programming assistant with syntax checking, and program editor with syntax highlighting
– RCI Explorer for Mitsubishi robots: powerful interface to the Mitsubishi robot control systems via Ethernet TCP/IP, USB, or a serial interface. With a convenient program editor, program downloads and uploads, online visualization of robot system data, program tracking in individual step mode and automatic mode, and project backups.

It contains both the virtual human, with 30 independently controllable degrees of freedom, and simulation of the Robotino® mobile robot platform.

System requirements
Applicable for CIROS® Studio and CIROS® Education:
– Intel Core Duo 2.2 GHz processor
– 2 GB main memory (RAM)
– 20 GB disk space
– Windows 7 or Windows 8 (32 or 64 bit) with Internet Explorer
– Graphic card with 3D acceleration and full OpenGL support, E.g., NVIDIA 7800GTX, 512 MB RAM or better
– USB interface for license dongle or Ethernet interface for PC network when using a license server
– Adobe Acrobat Reader version 6.0 or higher
– When using a license server: Standard PC with USB and Ethernet interface for license server

Single license	
Order no.	**8038980**-SSL
License extension	
Order no.	**8038980**-SLE

CIROS® Education
Applying virtual learning environments

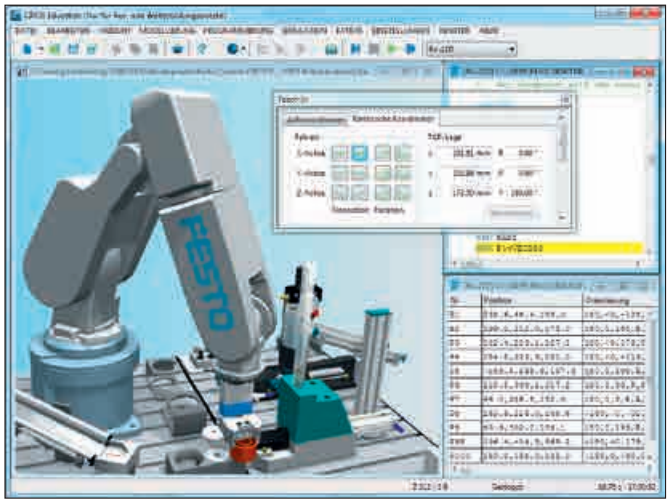

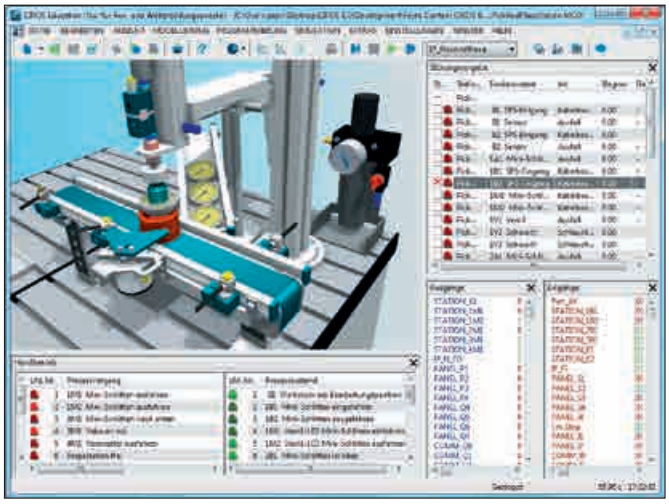

CIROS® Education offers all functions of CIROS® Studio, minus the capability to create new models or connect robot control systems. The main areas of application of CIROS® Education are training in:
– Robot programming
– PLC programming
– Troubleshooting
– Production planning and production control

Training in robot programming
CIROS® Education is ideally suited for learning how to program and commission industrial robot systems. For this purpose, the program offers an integrated training program and a variety of robot models.
– All the required basics for automation with robots are conveyed by the integrated CIROS® Robotics Assistant, which offers numerous graphics and animations that explain technical terms and facts, videos on a large number of industrial applications involving robots, sample programs for each model, and technical documentation, including instructions on processing.
– The model library, with over 25 prepared robot work cells, provides direct access to commissioning and programming robot applications, ranging from simple Pick&Place tasks to plants with numerous robot systems.

Training in PLC programming
CIROS® Education is the virtual learning environment for mechatronics with a focus on PLC controlled systems. It offers an ideal working environment for PLC programming based on Siemens S7 and other manufacturers' control systems. A virtual learning environment for the mechatronic training system MPS® is also included.
– The complex model library contains more than 30 process models of selected MPS® Stations, various conveyor systems, and an automated warehouse.
– The models can be activated immediately from the integrated virtual S7 PLC, STEP 7, or the TIA portal of the simulated SIMATIC Controller S7-PLCSIM, as well as via the EasyPort from any other external hardware PLC.
– Distributed control concept: Each station has its own virtual control system with separate programs that can be modified or created from scratch at any time.
– Commissioning of distributed control systems: The stations can work in manual operating mode, which allows gradual commissioning of the control programs in the individual stations.

Training in production planning and production control
CIROS® allows you to link the simulation and the higher-order controller of real systems. Focus is on the planning of production plants, the intralogistics, design, and optimization of Manufacturing Executing Systems (MES), as well as production management. In CIROS®, the 3D models of your production line are created from library elements.
– The library delivers numerous manufacturing, assembly, warehouse, and measuring stations for setting up an iCIM production line.
– The 3D simulation includes all the most important components of a manufacturing system, from flexible material flow to individual sensors, and uses the extensive functionality of CIROS® Studio.
– With the layout module, the layout of future production lines can be created with a few clicks of the mouse, while simultaneously creating the simulation model.

The touch of a button in CIROS® Supervision automatically creates a basic version of an MES system (Manufacturing Executing System) for the production line by using manufacturing control board functions with graphic process tracking and a link to the production database. CIROS® Supervision is supplied with CIROS® Education.

Troubleshooting training
CIROS® includes powerful password-protected fault simulations with a variety of fault scenarios, including adjustment faults in sensors. Finding and correcting faults can be logged to evaluate the results. This makes it possible to design effective training for systematic commissioning and repair malfunctions within the simulation environment.

Single license	
Order no.	**8038980**-ESL
License extension	
Order no.	**8038980**-ELE
12-user license	
Order no.	**8038980**-EL12
25-user license	
Order no.	**8038980**-EL25

CIROS®
Robotics applications

What do you need?
Ideally, for a robotics laboratory, we recommend actual robot work cells, for example the MPS® Robot Station with optional equipment levels, along with CIROS® Education and CIROS® Studio as a virtual learning environment for simulating a wide range of applications in industrial robotics.

Generally, a CIROS® Education license, available at the relevant workstations, is set up for all users training in the laboratory at the same time. A CIROS® Studio license is also required for the connection of real controllers for robots from Mitsubishi Electric.

Industrial robotics for everyone
The more than 25 ready-made simulation models of robot work cells in CIROS® Education are executable immediately after installation. The entry-level models, which represent simple Pick&Place tasks, are suitable for robot-programming beginners and provide users with a safe, hands-on environment for learning about the fundamentals of robotics.

Robot models from various other manufacturers include applications for industrial robots in the areas of dismantling, laboratory automation, packaging, and welding. Programming languages for each model can be set separately.

Quick commissioning
Anyone who uses an MPS® Robot Station in the laboratory will be able to find a suitable simulation model in CIROS® Education. CIROS® Education can be used to develop and optimize programs for the actual station, e.g., cycle time.

Ideally, the actual robot controller should be linked to the simulation and control computer via an Ethernet connection at the robot workstation. CIROS® Studio uses that connection to the robot controller to transfer the program created using CIROS® Education. The user then checks the robot positions in the actual station, adapts them if necessary, and runs the program, initially with the robot at controlled speed.

Individual expansion
All of the simulation models supplied provide a template for building a virtual learning environment with CIROS® Studio. Even an existing robot work cell can be remodeled using the available robot libraries along with the CIROS® Studio CAD import and modeling functions.

CIROS®
Automation technology applications

CIROS® 6.1

New

From hardware-in-the-loop to completely virtual
CIROS® supports various scenarios for PLC simulation, as well as offline programming for PLC-controlled automation technology installations. A real PLC can be coupled with CIROS® via EasyPort. In this type of scenario, CIROS® receives the PLC initial values, simulates the controlled process, and transfers the current sensor values back to the PLC inputs via EasyPort. Alternatively, various software controllers, such as the S7-PLCSIM or a CODESYS® SoftPLC, can be used to control the simulated sequence without any hardware. CIROS® also supports the connection of controllers via an OPC server.

The entire world of automation technology
In the collection of CIROS® models supplied you will find suitable simulation models that can be used immediately for virtually all Festo Didactic learning systems in the area of factory and process automation. The range of models includes the components, modules and stations of the Modular Production System MPS®. With CIROS® Studio you can also create your own process models or build your own systems based on the available models of the MPS® Stations.

Which PLC should you use for your application?
Given the wide range of options for connecting a PLC to CIROS®, it is generally possible to use any PLC to control the simulated model. Select the PLC manufacturer and type and we will recommend the best means of connecting it to the virtual learning environment.

CIROS® 6.1 now contains in its library 805 robots by 15 manufacturers, and incorporates more than 1,000 product updates compared to Ciros® 6.0. A number of operating sequences have also been revised to increase work-flow.

Just in – the new generation of MPS® is now available for your classroom!
- Mathematical simulation: The new MATLAB/Simulink interface enables user-defined formulations and algorithms for component behavior.
- Get started faster: kinematically correct display of robot lanes using the revised path system even without a program.
- CIROS® for virtual commissioning: Direct or indirect connection of field buses with CIROS®.
- Simplified operation: Model views can be operated intuitively using user-definable overlays.
- Quick optimization of custom scenes: new model analysis provides quick location of model inconsistencies.
- Updated access: Full support for Windows 10, including surface scaling levels for high-resolution displays and representation of a scene via several screens (including stereoscopic).
- Homeworking: Easy electronic lending of existing licenses for a limited period to users outside network (technical prerequisites applicable)
- Free-of-charge for all CIROS® 6x license owners. New customers receive at least two years of updates free-of-charge.

Single license	
Order no.	**8038980**
Update from CIROS® 5	
Order no.	**8038981**

Programming software

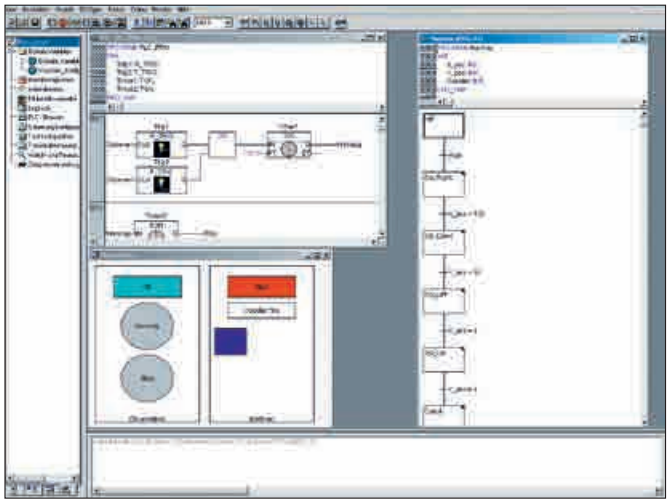

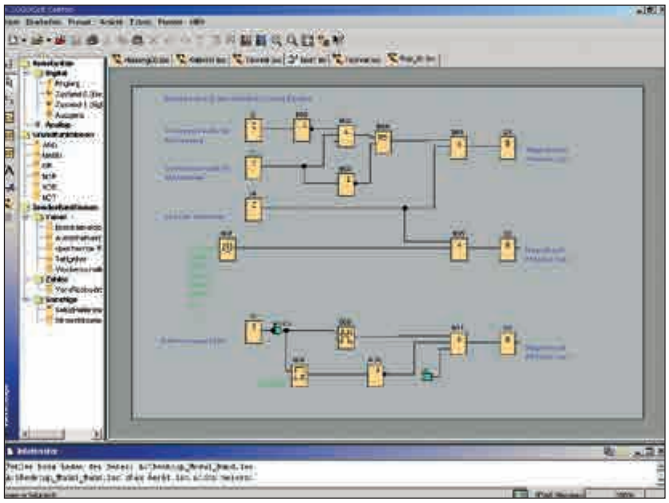

CODESYS® provided by Festo
The CODESYS® software for the CPX-CEC range of controllers allows standardized programming in accordance with IEC 61131-3, and is optimized for the configuration, programming, commissioning, and maintenance of pneumatic and electrical automation solutions.

Your advantages
– The IEC 61131-3 standard ensures that CODESYS® is flexible and can be used a wide range of control tasks
– Very simple to commission and program
– Ethernet communication for simple programming, module library included
– Module library for electric drives

The following functions and languages are supported
– Ladder diagram
– Structured text
– Sequential function chart
– Continuous function chart
– Function block diagram
– Integrated visualization
– Trace functions
– Offline simulation
– All programming languages can be used in combination with one another
– Simultaneous conversions possible
– All standard data types: BYTE, WORD, DWORD, SINT, USINT, INT, UINT, DINT
– Symbolic operands with no length restriction
– Context-sensitive help functions
– Global search and replace
– Disc space check prior to download
– Unlimited number of function parameters

Free download

LOGO! Soft Comfort V8
– Easy operation in single mode and simple project planning in network mode
– Intuitive programming and configuration of the many functions; fast and easy interconnection at the click of a mouse
– Automatic configuration of communication and representation in the network view
– Up to three programs can be displayed side-by-side, enabling signals to be dragged from one program and dropped into another
– Programs from previous versions can be used

Order no.	**8040050**

Visualization software

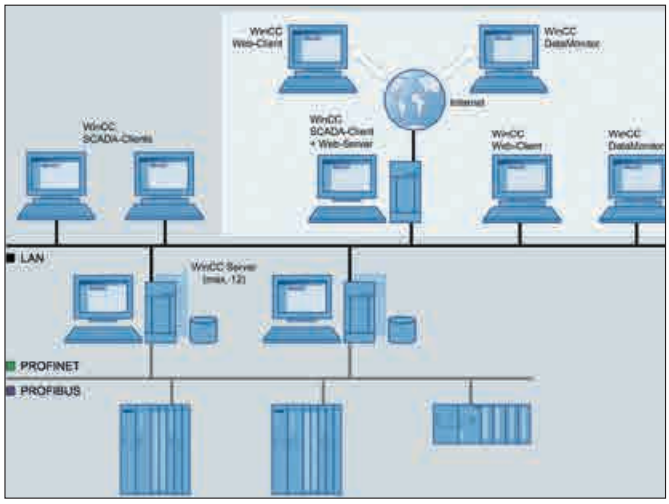

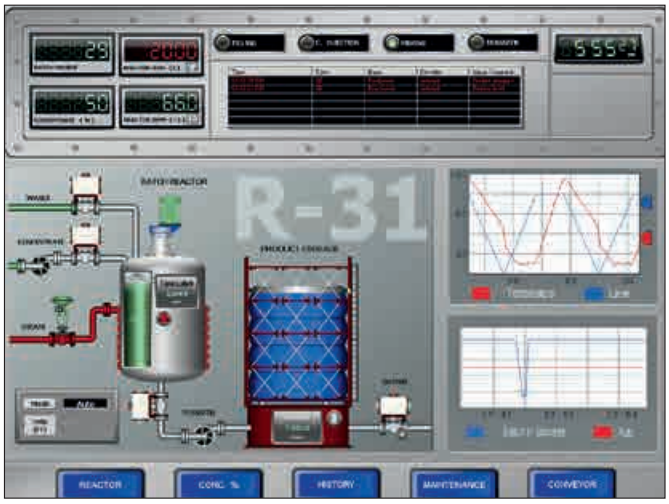

Trainer Package
WinCC/Web Navigator
Systems operation and monitoring via the Internet, in-house intranet or LAN connection using SIMATIC WinCC.

- 6x WinCC Complete Version RC 2048 Variables
- 6x WinCC/Web Navigator Diagnostics Server
- 6x WinCC/Web Navigator Diagnostics Client

System requirements
Windows 7 Professional, Enterprise, Ultimate (32 bit/64 bit), Windows XP Professional (32 bit)

Order no.	**556238**

Wonderware InTouch® HMI
InTouch is an interactive system for visualizing, monitoring, and controlling industrial processes.

The package includes the InTouch development and runtime version for Windows with 512 PLC variables. A comprehensive library with over 500 “intelligent” and individually adaptable graphic and object symbols is also included.

The package includes a manual, as well as context-related help texts in the software. Supplied on DVD with USB license dongle in the mini-systainer.

Also order:
InTouch manual containing detailed descriptions for using the software and the functions for creating visualization applications (order no. 95242 en).

System requirements
- Win XP SP3 Professional 32 bit/Win Vista SP2 Business or Ultimate 32 or 64 bit/Win 7 SP1 Professional or Ultimate 32 or 64 bit
- PC with at least a 1.2 GHz processor
- At least 1 GB RAM
- At least 100 GB of free hard drive space
- Graphics card and monitor with Super VGA resolution (1024 x 768) or better
- CD-ROM or DVD drive (for installation)

Single license de/en	**567426**
6-user license de/en	**567427**

EasyPort USB

Interface for measuring, open-loop control, closed-loop control

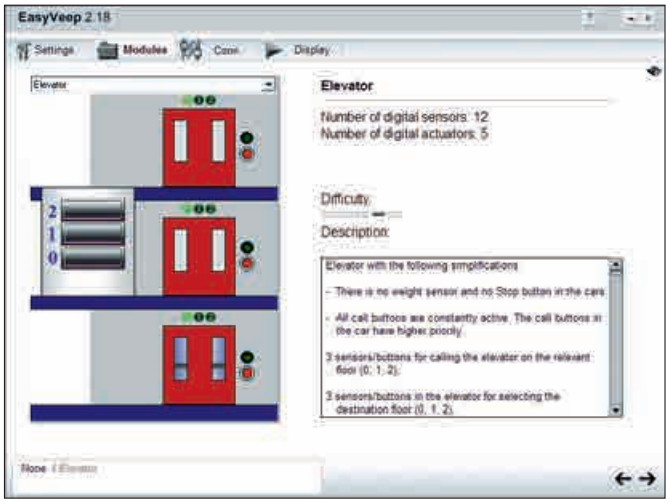

Connection of software/simulation with actual training equipment/ all PLCs

The principle is simple: the USB interface is connected to the PC. The connection to the automation equipment is via standard SysLink connectors. Therefore input and output signals can be read into and output from a PC. To ensure that EasyPort is adaptable to different situations, we have developed software for the device drivers with a graphical user interface, via which connections can be made.

Technical data

- 24 V power supply via separate screw terminals or via SysLink connectors
- Interface to PC (galvanically isolated): USB 2.0, RS 232. Up to 4 modules can be connected via a USB hub. Transmission speed: 115 kbaud
- Analog interface: sub-D 15-pin socket, 12 bit resolution, 4 analog inputs, 2 analog outputs, sample frequency 0.5 kHz
- Digital interface: 16 digital inputs, 16 digital outputs on 2 x 24-pin Centronics sockets with 8 digital inputs each (24 V), 8 digital outputs (24 V). 24 V power supply. Digital signals represented by LEDs
- Large LCD display, display of channel, unit, trend, and measured value (4 digits). Selection of the channel to be displayed and the units via keys.
- Controllable via ActiveX Control from LabVIEW, C++, or Visual Basic

EasyPort USB 19”

- Technical data as with EasyPort USB , but for installation in a 19” support system
- Front plate: 19” plate with 36 HP

Control of numerous practical process models

With the included EasyPort, and the EasyVeep® simulation software, a wide variety of practical process models can be controlled with any PLC. The models are documented and meet a broad range of requirements.

EasyVeep® is easy to install and offers exciting fields of application. The topics covered include the following:

- 7-segment display
- Alarm systems
- Level crossings
- Elevators
- Garage doors
- Multi-storey car parks
- Sluice gates
- Sorting systems
- Hot water tanks
- Washing machines
- Wind generators
- and much more

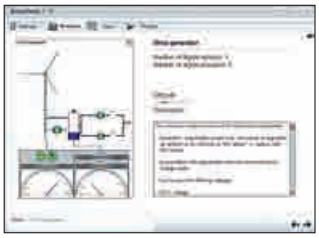

Connects the simulation to the real world

Example applications	**Measuring**	**Control (open loop)**	**Closed-loop control**	**Controlling a simulation**
PC: **Software and simulations**	– FluidLab®-PA – FluidLab®-P – FluidLab®-H – LabVIEW – C++ – Visual Basic	– FluidSIM® (only digital) – S7-PLCSIM – CODESYS® Soft-SPS – LabVIEW – C++ – Visual Basic	– FluidLab®-PA – FluidLab®-P from version 2.0 – LabVIEW – C++ – Visual Basic	– EasyVeep® – FluidSIM® – CIROS® – LabVIEW – C++ – Visual Basic
Interface: **EasyPort USB**	Interface: USB  Interface: digital/analog	Interface: USB  Interface: digital/analog	Interface: USB  Interface: digital/analog	Interface: USB  Interface: digital
Real training equipment	– Simulation box, digital/analog – MPS® PA – TP 210 – TP 610 EasyPort USB is the PC interface for receiving analog measurements and digital signals. Measurement data logged via: – FluidLab®-PA – FluidLab®-P – FluidLab®-H	– Simulation box, digital/analog – MPS® PA – MPS® – TP 301 EasyPort USB is the PC interface to control actual processes or simulations on a PC via an actual PLC. Actual process, controlled via: – S7-PLCSIM – FluidSIM® – CODESYS®	– Simulation box, digital/analog – MPS® PA – TP 210 – TP 610 EasyPort USB is the PC interface to control an actual closed-loop controlled system. Closed-loop controlled system, controlled via: – FluidLab®-PA – FluidLab®-P from version 2.0	– Any PLC – Simulation box, digital – EduTrainer® Recommendation: The CODESYS® starter kit with CECC-LK and EasyPort USB contains everything that is needed to start on the subject of control ➔ Page 101 Simulated process, displayed via: – CIROS® – FluidSIM® – EasyVeep®

EasyPort USB	**548687**

EasyPort USB 19“	**8021637**

Scope of delivery
- EasyPort USB/EasyPort USB 19“
- 24 V connecting cable on 4 mm safety plugs
- USB cable
- CD-ROM: EasyVeep®, EasyOPC driver, datasheet, Activ-X control, examples of control using LabVIEW

Also order:

For EasyPort with a real process or SimuBox:

I/O data cable with SysLink connectors (IEEE 488) at both ends, 2.5 m	34031
Analog cable, parallel, 2 m	529141

For EasyPort with a real PLC:

I/O data cable with SysLink connectors (IEEE 488) on both ends, crossover	167106

For EasyPort, freely wirable, with any PLC:

I/O data cable with SysLink connector IEEE 488 and bare cable-end sleeves	167122

For EasyPort with an EduTrainer®:

I/O data cable, crossover, with terminal socket, 0.3 m	167197

For EasyPort with a real PLC or SimuBox:

Analog cable, crossover, 2 m	533039

CODESYS starter kit with CECC-LK and EasyPort USB	8024001
Universal connection unit, digital (SysLink)	162231
Quick-Fix screw adapter	549806

Teachware

Teaching materials for basic and advanced training

Theory and practice, our range

– Automation/PLC
– Mechatronics/Process automation
– CNC technology/Equipment
– Pneumatics
– Hydraulics
– Electrical engineering/Electronics

A wide range of different teaching materials for ongoing basic and advanced training are available for these topics.

Technical literature and textbooks
The technical literature and textbooks provide the basis for studying technologies and processes. For trainers and teachers, they are essential for preparing courses. They also provide practical exercises with professional guidelines for those who do not enjoy self-study on a PC.

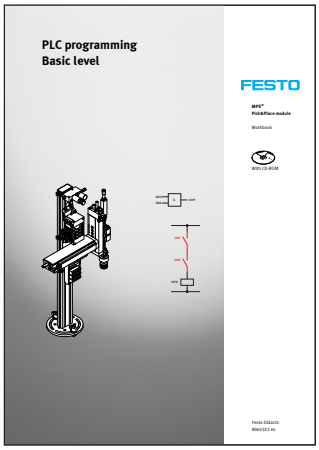

Workbooks
For more than 50 years, Festo Didactic has been at the forefront of industrial training with training packages with equipment sets and tailored workbooks that include exercises and sample solutions (including CD-ROM). The exercises are based on real industrial practices and have been successfully implemented in a wide range of specialized training.

Dictionaries and manuals
Symbols, rules, standards, formulae, etc. You don't need to have everything in your head, but you do need to know where to find it!

Legal security

Festo Didactic's teaching materials are already in widespread use for a diverse range of purposes. With the new licenses, the legal basis for individualized use has now been established. From now on, users have the option of choosing one of three types of license, to ensure an optimized – and legally secure – use of Festo's teaching materials tailored to your needs.

Choose from the following types of license:

HomeUse license
For personal use. The advantage to you: a lower price for the PDF of the training material.

Campus license
The standard option for commercial (professional) use. Ideal for all those wishing to use the training materials at a single location.

Enterprise license
For large (international) companies and educational institutions with multiple locations.

For information on each of the license types, please see the following table.

Note:
- The license types are valid for all Festo Didactic training materials.
- The full rights of use are set out in the legal information contained in the purchased training materials.

Properties	HomeUse license	Campus license	Enterprise license
Scope of delivery	PDF document (exercises/worksheets, sample solutions)	Teaching material (workbook with multimedia CD-ROM*)	As agreed
Document protection	Watermark	–	–
Document can be modified	X	X	X
Reproduction rights	–	X	X
Multilingual version*	–	–	X*
Target group	Private individuals	Commercial/educational organizations (single location)	Commercial/educational organizations (multiple locations)
Shop	PayPal	FESTO	FESTO

* The languages offered vary depending on the training material.

Electrical engineering/Electronics
Workbooks

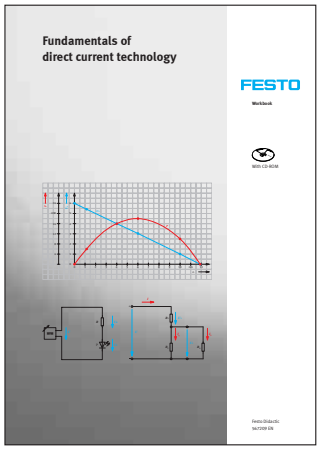

Fundamentals of direct current technology
The fundamentals of direct current technology, provide an introduction to the world of electrical engineering/electronics. The content is explained and elaborated in realistic projects. The primary focus is on the explanation of the basic variables, behavior and relationships and the recording of these using measurements.

Among the variables covered are voltage, current, resistance, and conductance as well as energy and capacity. Ohm's law is explained in detail. Particular emphasis is placed on the use of measuring devices. The circuit examples include series and parallel connection, voltage divider, bridge circuit, and voltage sources.

The workbook contains:
– Solutions
– Didactic notes
– Worksheets for the student
– Multimedia CD-ROM with graphics

C. Löffler
Edition 2010, 300 pages, in color, in folder.

Campus license (➔ Page 55):

de	**567207**
en	**567209**
es	**567211**
fr	**567213**

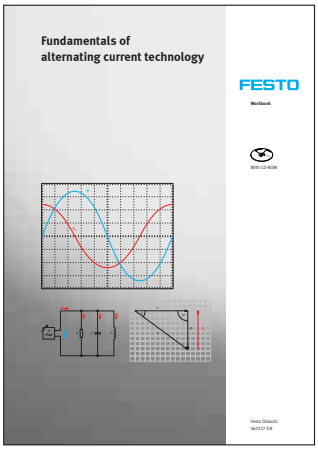

Fundamentals of alternating current technology
The workbook for fundamentals of AC technology continues the introduction to electrical engineering/electronics components and systems with topics relating to AC technology. The main topics covered are the electric field and induction, and the resulting behavior of components in the AC circuit.

Topics such as the capacitor and coil in the DC and AC circuit, as well as the series and parallel connection of resistor, coil and capacitor are covered in project exercises. The variables and relationships of active resistance, reactance, and impedance, and the topic of phase shift of current and voltage are covered in detail.

The workbook contains:
– Solutions
– Didactic notes
– Worksheets for the student
– Multimedia CD-ROM with graphics

C. Löffler
Edition 2010, 290 pages, in color, in folder.

Campus license (➔ Page 55):

de	**567215**
en	**567217**
es	**567219**
fr	**567221**

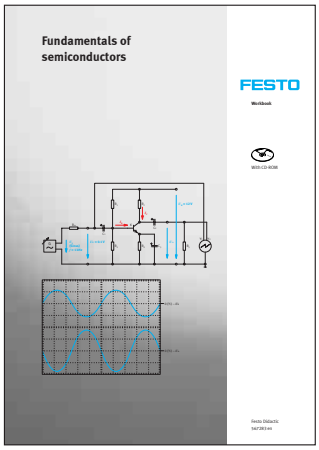

Fundamentals of semiconductors
The third volume of the fundamentals of electrical engineering/electronics deals with semiconductors. covering the design and mode of operation of modern semiconductors, with their application demonstrated in project exercises.

As an introduction to the topic, different diodes, such as the semiconductor diode, Zener diode, and LED are considered and the basic concepts are worked out. Content including PN junction, reverse voltage, or conducting state current is demonstrated both theoretically and, where possible, using measurements. The topic of transistors is also explained using bipolar and unipolar transistors. The book also covers power electronics components, such as diac, triac, and thyristor.

The workbook contains:
– Solutions
– Didactic notes
– Worksheets for the student
– Multimedia CD-ROM with graphics

M. Wäschle
Edition 2010, 208 pages, in color, in folder.

Campus license (➔ Page 55):

de	**567281**
en	**567283**
es	**567285**
fr	**567287**

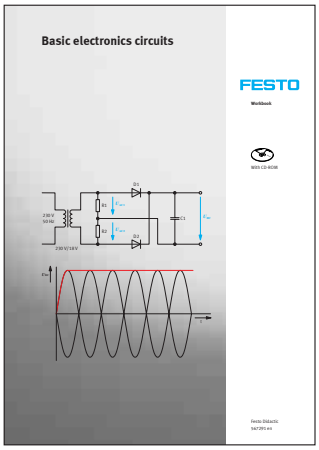

Basic electronics circuits
The workbook for basic electronics circuits completes the series of workbooks for the fundamentals of electrical engineering/electronics. Particular emphasis is placed on the analytical examination of the interaction between the components already covered in the first three books on the fundamentals.

The content includes project exercises with selected basic circuits, in which the design is first developed and then analyzed on the basis of measurement technology. The circuits include power supply unit circuits, amplifier circuits, flip-flops, and power electronics circuits, as well as circuits commonly used in industrial practice.

The workbook contains:
– Solutions
– Didactic notes
– Worksheets for the student
– Multimedia CD-ROM with graphics

K.-H. Drüke
Edition 2011, 382 pages, in color, in folder.

Campus license (➔ Page 55):

de	**567289**
en	**567291**
es	**567293**
fr	**567295**

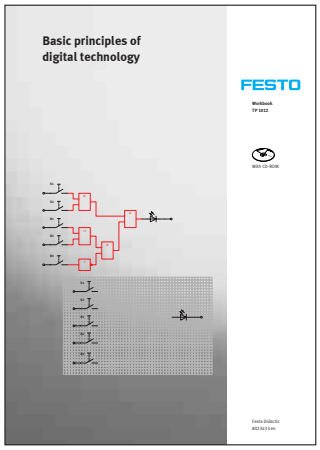

Basic principles of digital technology
The basic principles of digital technology workbook provides an introduction to the world of digital signals and their interconnection. The primary focus is on the explanation of the basic variables, behavior, and relationships.

The content is project exercises with selected basic circuits, in which the design is first developed and then analyzed on the basis of measurement technology. The contents include elementary logic modules and logic circuits, Schmitt triggers, trigger circuits, flipflops, counting circuits, data conversion, and arithmetic circuits.

The workbook contains:
– Sample solutions
– Training notes
– Worksheets for the student
– Multimedia CD-ROM with graphics

S. Enderle
Edition 2012, 200 pages, in color, in folder.

Campus license (➔ Page 55):

de	**8023432**
en	**8023433**
es	**8023434**
fr	**8023435**

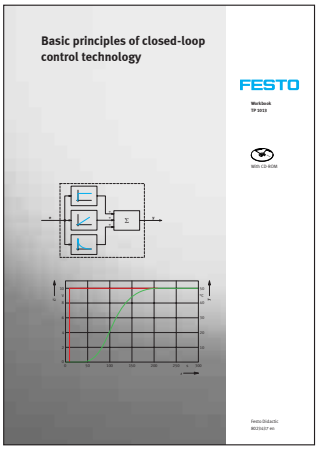

Basic principles of closed-loop control technology
The optimum introduction to the world of closed-loop systems is provided by the workbook, Basic principles of closed-loop systems. Basic terms are explained through examples, with the focus then shifting to behaviors and relationships. Special focus is given to the topics of behavior and analysis of control processes.

The content includes project exercises with selected basic circuits, in which the design is first developed and then analyzed on the basis of measurement technology. Training content, includes structure of a control circuit, spring responses and dynamic behavior, Bode diagram, controlled system modeling, positive and negative feedback, and two and three-step controllers as well as P, PI, and PID controllers.

The workbook contains:
– Sample solutions
– Training notes
– Worksheets for the student
– Multimedia CD-ROM with graphics

C. Ament
Edition 2013, 170 pages, in color, in folder.

Campus license (➔ Page 55):

de	**8023436**
en	**8023437**
es	**8023438**
fr	**8023439**

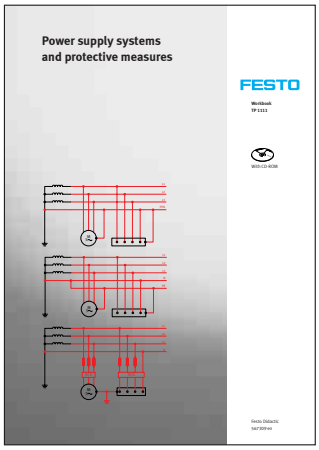

Power supply systems and protective measures
The workbook for power supply systems and protective measures covers in detail the topic of the safety of electrical systems in accordance with DIN VDE.

The specific conditions and the measures for avoiding dangerous situations are explored using realistic situations. Different types of networks (TN-C, TN-CS, TT and IT network), protection against direct and indirect contact, protection against electric shock (including in the event of a fault), protection through RCD, and initial and repeat testing of electrical systems and devices are explained in project form.

The workbook contains:
– Solutions
– Didactic notes
– Worksheets for the student
– Multimedia CD-ROM with graphics

J. Stumpp
Edition 2012, 230 pages, in color, in folder.

Campus license (➔ Page 55):

de	**567307**
en	**567309**
es	**567311**
fr	**567313**

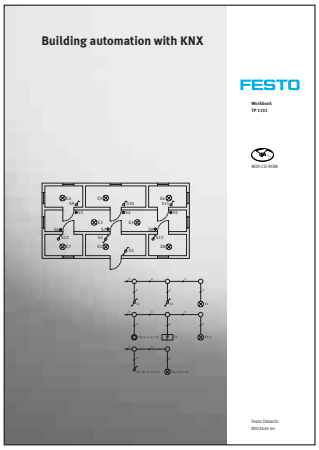

Building automation with KNX
Modern buildings demand a wide variety of technologies, the most important being intelligent building automation, as a modern building cannot function without it.

The workbook for the basic principles of building automation introduces the relevant topics in realistic projects. Focus is on the software tools, equipment, and configuration, as well as their interaction and extended options.

The workbook contains:
– Sample solutions
– Training notes
– Worksheets for the student
– Multimedia CD-ROM with graphics

N. Karlsson
Edition 2013, 110 pages, in color, in folder.

Campus license (➔ Page 55):

de	**8023444**
en	**8023445**
es	**8023446**

Electrical engineering/Electronics
Workbooks

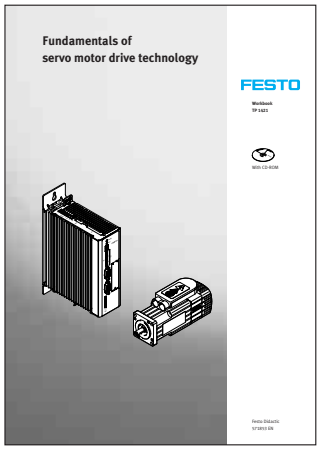

Fundamentals of servo motor drive technology
Servo drives play a particularly important role in automation, as due to today's state-of-the-art controller technology, they have developed into the standard drive. The workbook for the fundamentals of servo motor drive technology uses practical exercises to provide a detailed introduction to the topics relating to modern servo drives.

The topics covered include the design and commissioning of a servo drive, RPM regulation, regulating torque, and homing as well as additional content, such as positioning with variable speeds, acceleration, braking and positioning tasks.

The workbook contains:
– Solutions
– Didactic notes
– Worksheets for the student
– Multimedia CD-ROM with graphics

F. Ebel, M. Pany
Edition 2010, 192 pages, in color, in folder.

Campus license (➔ Page 55):

de	**571851**
en	**571853**
es	**571855**
fr	**571857**

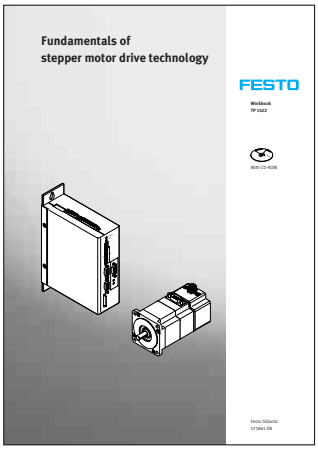

Basic principles of stepper motor drive technology
The workbook for the basic principles of stepper motor drive technology uses practical exercises to provide a detailed introduction to the topics relating to modern stepper motor drives.

In addition to basic content, including design and commissioning of stepper motor drives, practical topics, such as homing, speeds, positioning, acceleration, and braking ramps play an important role as well. More detailed content is also covered, i.e., current reduction for stepper motor drives.

The workbook contains:
– Sample solutions
– Training notes
– Worksheets for the student
– Multimedia CD-ROM with graphics

F. Ebel, M. Pany
Edition 2010, 194 pages, in color, in folder.

Campus license (➔ Page 55):

de	**571859**
en	**571861**
es	**571863**

Glossary of electrical drive technology
Modern drive technology is characterized by the increased integration of electrical and mechanical components into drive systems. New and improved drive capabilities can be achieved through the use of compact power electronics, innovative motor concepts, optimized mechanical components, new materials, and high-performance communication technology. This book lists the main concepts in glossary format and provides brief explanations to facilitate a better understanding of these drives. However since there is more to an electrical drive that just the electric motor, it also touches on areas such as measurement systems, power electronics, gearboxes, controllers, and components for transmitting power.

S. Hesse
Edition 2004, 200 pages, bound.

de	**539265**

Pneumatics/Electropneumatics

Technical book and workbooks

Technical book: Fundamentals of automation technology
The technical book deals with all essential fundamentals of automation technology in a compact form, specially adapted for the MecLab® training system for secondary schools.

Contents
– What is automation technology?
– How do engineers work?
– Fundamentals of electrical engineering
– Fundamentals of pneumatics
– Fundamentals of electrical drives
– Fundamentals of control technology

F. Ebel, S. Idler, G. Prede, D. Scholz, A. Hüttner, R. Pittschellis
Edition 2008, 106 pages, 90 illustrations, bound

de	**562069**
en	**563060**
es	**563062**
fr	**563061**

Pneumatics, Basic level TP 101
Nineteen project-orientated exercises, increasing in complexity and suitable for equipment set TP 101, are the ideal introduction to pneumatics. Real problem descriptions with positional sketches, concrete project tasks, and detailed aids for professional implementation provide the ideal preparation for a real-life industrial environment.

The workbook includes:
– Sample solutions
– Training notes
– Multimedia CD-ROM with graphics, photos of industrial applications, animations, and FluidSIM® circuit diagrams
– Exercise sheets for trainees

W. Haring, M. Metzger, R.-C. Weber
Edition 2012, 284 pages, in color, in folder.

Campus license (➔ Page 55):

de	**540671**
en	**541088**
es	**542503**
fr	**542507**

Electropneumatics, Basic level TP 201
Twelve project-orientated exercises, increasing in complexity and suitable for equipment set TP 201, are the ideal introduction to electropneumatics. Real problem descriptions with positional sketches, concrete project tasks, and detailed aids for professional implementation provide the ideal preparation for a real-life industrial environment.

The workbook includes:
– Sample solutions
– Training notes
– Multimedia CD-ROM with graphics, photos of industrial applications, animations, and FluidSIM® circuit diagrams
– Exercise sheets for trainees

M. Pany, S. Scharf, R.-C. Weber
Edition 2012, 270 pages, in color, in folder.

Campus license (➔ Page 55):

de	**540673**
en	**541090**
es	**542505**
fr	**542509**

Automation technology/PLC

Siemens technical books, GRAFCET

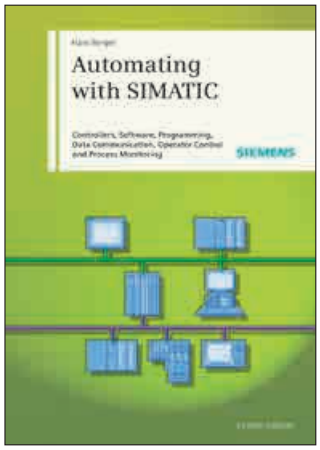

Automating with SIMATIC
Using the SIMATIC S7 programmable logic controller as an example, this book gives the reader a comprehensive introduction to the mode of operation and structure of a modern automation system. This edition explains project planning and programming of the controller via network connection and shows the options for operating and observing the SIMATIC HMI.

The book is excellent for all readers who have little knowledge in the area and wish to learn more about programmable logic controllers.

Hans Berger
Edition 2012, 301 pages, bound.

de	**194039**
en	**540686**

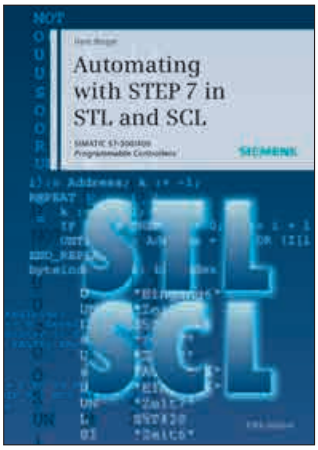

Automating with STEP 7 in STL and SCL
This book presents the latest version of the STEP 7 basic software. The book also describes the elements and applications of the text-oriented programming languages STL (Statement List) and SCL (Structured Control Language), both for the SIMATIC S7-300 and the SIMATIC S7-400, including PROFINET applications. It is intended for all users of SIMATIC S7 controllers. Beginners are given an introduction to the area of programmable logic controllers, while experienced users are shown the special applications of the SIMATIC S7 automation system. All programming examples in the book – and many more – are available for download on the publisher's website.

Hans Berger
Edition 2011, 578 pages, bound.

de	**194040**
en	**540687**

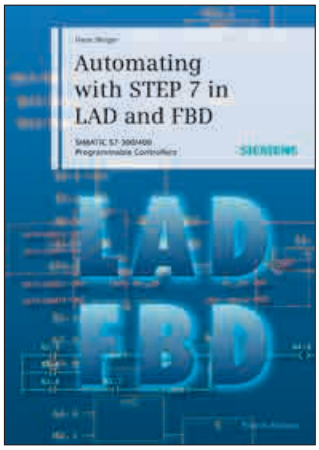

Automating with STEP 7 in LDR and FCH
This book is an introduction to the latest version of the STEP 7 programming software with functions for PROFINET IO. The book also describes the elements and applications of the graphic-oriented programming languages Ladder Diagram (LDR) and Function Chart (FCH), both for the SIMATIC S7-300 and the SIMATIC S7-400 with PROFINET applications. It is intended for all users of SIMATIC S7 controllers. Beginners are given an introduction to the area of programmable logic controllers, while experienced users are shown the special applications of the SIMATIC S7 automation system. All programming examples in the book – and many more – are available for download on the publisher's website.

Hans Berger
Edition 2012, 475 pages, bound.

de	**194041**
en	**540688**

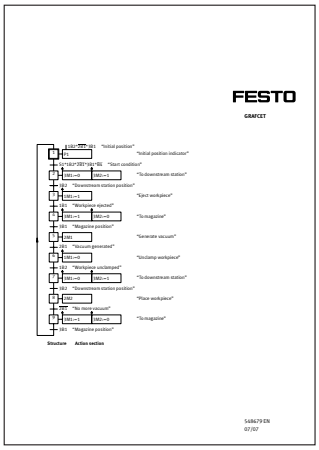

Practical knowledge: GRAFCET
This manual describes the specification language for function charts of the GRAFCET sequence control. The contents of the DIN EN 60848 standard are described in detail. Information is presented in detail in a practice-oriented format and is also highly suitable as a reference work.

Gerhard Schmidt
Edition 2007, 64 pages, manual

de	**548678**
en	**548679**
es	**548680**
fr	**548681**

Automation technology/PLC

Textbooks and workbooks

Programmable logic controllers basic level
Textbook
This book describes the structure and mode of operation of PLCs. The central topic of the book is the DIN EN 61131-3 programming standard, which takes into account expansions and developments for which there was previously no standardized language. Beginners and more experienced users will find an easy-to-understand presentation of modern programming methods in accordance with the new standard for PLC programming. The solutions to the various examples are manufacturer-neutral and can therefore be used regardless of the PLC manufacturer.

R. Bliesener, F. Ebel, C. Löffler, H. Regber, E. v. Terzi, A. Winter
Edition 2002, 214 pages, bound.

de	**93310**
en	**93311**
es	**93317**

Programmable logic controllers in practice
This book illustrates possible applications of a PLC, in this case the SIMATIC S7, through practice-oriented exercises. In addition to the classical programming languages, Statement List (STL), Ladder Diagram (LDR) and Function Chart (FCH), the book also contains several programming examples using the sequence language GRAPH, SCL (Structured Control Language), and HiGraph. The more complex exercises relate to the stations of Festo Didactic's Modular Production System MPS®.

Werner Braun
Edition 2005, 355 pages, bound.

de	**193449**

Programmable logic controllers basic level
Workbook
This workbook covers the structure and mode of operation of a PLC and the systematic development of PLC programs. The content is based entirely on the new DIN EN 61131-3 programming standard. Practical exercises require a PLC and an actual process (can be represented using equipment set PLC, TP 301).

The workbook contains sample solutions on CD-ROM for Festo FPC 101, Siemens S7-300, and Allen-Bradley SLC500. Geared to PLC equipment set, TP 301.

R. Bliesener, F. Ebel, C. Löffler, H. Regber, E. v. Terzi, A. Winter
Edition 2002, 530 pages, in folder.

Campus license (➔ Page 55):

de	**93313**
en	**93314**
es	**94427**

Automation technology/PLC

Dictionary, Sensors

Dictionary of Automation Technology

Worldwide use of automation systems and their diverse areas of application have resulted in a specialized vocabulary. Reliable translation of technical terms is an important prerequisite for successful, unambiguous communication within the framework of international collaboration.

4,500 new terms have been added to this completely revised and expanded new edition, which now includes more than 16,700 terms.

The terms, designations, and definitions included reflect the entire spectrum of industrial automation technology, from pneumatics and hydraulics, electrical engineering, electronics, and data processing to administration and training.

Edition 2008, 416 pages, bound

de – en / en – de	**56975**

Available on the App Store

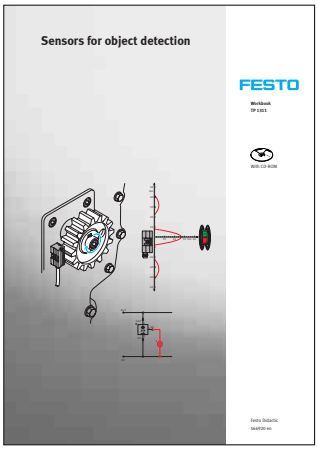

Sensors for object detection Workbook

15 industrial projects, which are compatible with TP 1311, are specifically targeted at the topic of sensors for object detection, with each project including problem descriptions, parameters, and tasks. Particular emphasis is given to the configuration, function, and influence of material properties on behavior, application possibilities, and selection of a sensor based on application conditions. The content topics are covered by exercises that incorporate magnetic, inductive, optical, and capacitive proximity sensors. Each worksheet is accompanied by a sample solution.

The workbook includes:
– Sample solutions
– Training notes
– Multimedia CD-ROM with graphics, photos of industrial applications
– Exercise sheets for students

F. Ebel
Edition 2009, 252 pages, in color, in folder.

Campus license (➔ Page 55):

de	**566919**
en	**566920**
es	**566921**
fr	**566922**

Proximity sensors Textbook

This sensor textbook deals in detail with proximity sensors for handling and processing systems, and can be used to support both basic and further training programs, as well as for self-study. The book is divided into a course section, a fundamentals section, and a section with solutions to the exercises in the course section. The contents of the book correspond to the workbook, while a glossary of keywords provides rapid access to information on particular types of sensors.

F. Ebel, S. Nestel
Edition 2003, 278 pages, bound

de	**93045**
en	**93046**
es	**94342**

CNC technology/Working material

Textbooks/Drawing templates

CNC Textbook
Basic principles of numerically controlled machine tools (CNC). Programming in accordance with ISO and SINUMERIK 840D.

de	**540692**

Also order:

Book of solutions for the sample exercises from the CNC textbook

de	**540693**

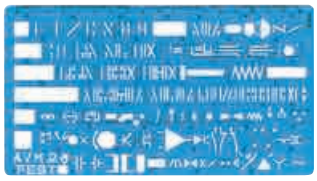

Drawing template
The drawing templates for control technology. For fast designing of pneumatic circuit diagrams or flow diagrams. Can be used to draw all electrical (DIN 40713), electronic (DIN 40719), pneumatic, hydraulic (DIN/ISO 1219), and logic symbols (DIN 40700).

Control technology	**90021**
Program flow chart	**90022**

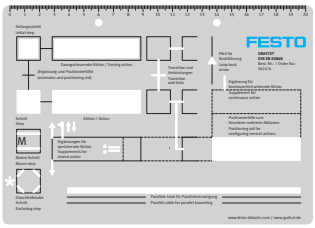

GRAFCET drawing template
Drawing assistance for the simple creation of a GRAFCET plan to DIN EN 60848. All essential components, such as steps, actions, and transitions are available. Positioning aids support alignment of and compliance with appropriate distances. The semi-transparent, flexible, plastic drawing template comes with a ruler and is supplied in two languages.

de/en	**562474**
es/fr	**562481**

Mechatronics – MPS® Transfer system

Workbooks

MPS® Transfer System
Turning Module
workbook
For mechatronics training and training in electric and metal professions.

Topics: Control technology, simulation and safety engineering.

Objective: Step-by-step instruction in basic knowledge, with practice-related implementation in FluidSIM®, STEP 7 and CIROS®, independent study with internet, WBT, Mechatronics Assistant, and print media.

Contents: Students analyze the module function, complete parts lists, create hardware configurations, determine I/O allocation lists, design electric/pneumatic circuit diagrams and GRAFCET in FluidSIM®, program sequencers in S7-GRAPH/KOP, and test programs with real and/or simulated controls and modules. They also become familiar with the EC machinery directive.

The workbook contains:
– Sample solutions
– Didactic instructions
– Worksheets for the student
– Multimedia CD-ROM

A. Zabka
Edition 2010, 400 pages, in color, in folder.

Campus license (➔ Page 55):

de	**573893**
en	**573894**

MPS® Transfer System
Measuring Module, analog
workbook
For mechatronics training and training in electric and metal professions.

Topics: Control technology, simulation, analog value processing.

Objective: Step-by-step instruction in basic knowledge, with practice-related implementation in FluidSIM®, STEP 7 and CIROS®, independent study with internet, WBT, Mechatronics Assistant, and print media.

Contents: Students analyze the module function, complete parts lists, create hardware configurations, determine I/O allocation lists, design electric/pneumatic circuit diagrams and GRAFCET in FluidSIM®, program sequencers in S7-GRAPH/KOP, and test programs with real and/or simulated controls and modules. They also configure and evaluate an analog sensor.

The workbook contains:
– Sample solutions
– Didactic instructions
– Worksheets for the student
– Multimedia CD-ROM

A. Zabka
Edition 2010, 360 pages, in color, in folder.

Campus license (➔ Page 55):

de	**573897**
en	**573898**

MPS® Transfer System
Ejection Module, pneumatic
workbook
For mechatronics training and training in electric and metal professions.

Topics: Control technology and simulation.

Objective: Step-by-step instruction in basic knowledge, with practice-related implementation in FluidSIM®, STEP 7 and CIROS®, independent study with internet, WBT, Mechatronics Assistant, and print media.

Contents: Students analyze the module function, complete parts lists, create hardware configurations, determine I/O allocation lists, design electric/pneumatic circuit diagrams and GRAFCET in FluidSIM®, program sequencers in S7-GRAPH/KOP, and test programs with real and/or simulated controls and modules.

The workbook contains:
– Sample solutions
– Didactic instructions
– Worksheets for the student
– Multimedia CD-ROM

A. Zabka
Edition 2010, 320 pages, in color, in folder.

Campus license (➔ Page 55):

de	**574135**
en	**574136**

MPS® Transfer System
Frequency Converter MM420
workbook
For mechatronics training and training in electric and metal professions.

Topic: Drive technology.

Objective: Step-by-step instruction in basic knowledge with practice-related implementation using the MPS® transfer line.

Contents: Students become familiar with the basic design of a frequency converter, carry out a quick setup of the MM420, parameterize the MM420 through the BOP for reverse, normal, and jog mode, adjust boost, start-up, and braking ramps, use digital inputs and outputs for reverse, normal operation, and speed shift through fixed frequencies, and parameterize the MM420 for sensor-controlled start-up and braking of the MPS® transfer line.

The workbook contains:
– Sample solutions
– Didactic instructions
– Worksheets for the student
– Multimedia CD-ROM

A. Zabka
Edition 2010, 160 pages, in color, in folder.

Campus license (➔ Page 55):

de	**574139**
en	**574140**
fr	**574142**

 HomeUse license in the Internet (➔ Service), Enterprise license on request (➔ page 55).

Mechatronics – MPS® Stations

Workbooks

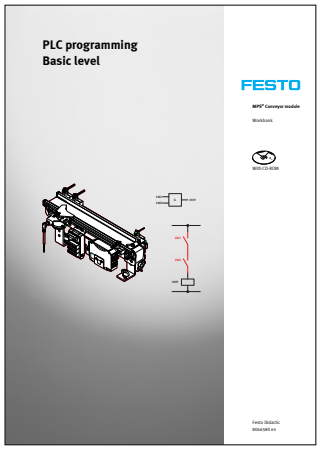

MPS® conveyor module, basic level PLC programming workbook
This workbook covers the fundamentals of PLC programming, using the MPS® Pick&Place module and a SIMATIC S7 1500 as hardware.

The workbook covers in-depth knowledge about the use and operation of the TIA portal.

The project exercises focus on the following topics:
– Commissioning the system
– Operating method of a PLC
– Logic operations
– Latching circuits
– Edge operations
– Time and counting functions

The workbook contains:
– Sample solutions
– Training notes
– Worksheets for the student
– Multimedia CD-ROM

Raphael Hörner
Edition 2016, 244 pages, in color, in folder.

Campus license (➔ Page 55):

de	**8046578**
en	**8046580**
es	**8046581**
fr	**8046582**

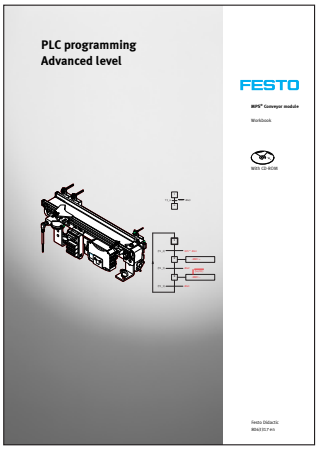

MPS® conveyor module, advanced level PLC programming workbook
Prerequisite is knowledge from the workbook “MPS® conveyor module, basic level PLC programming”. Building on this, the basics of GRAFCET, linear process controls and process controls with operating part are taught. The object-oriented approach provides an introduction to a modular software concept.

The students focus on the following topics:
– Development of a process control in GRAFCET and as an IEC process function plan
– Programming of a process control (with operating part) with GRAPH7 as well as with FCH
– Use of an operating panel

Finally solutions to programming a MPS® Station will be worked on.

The workbook contains:
– Sample solutions
– Training notes
– Worksheets for the student
– Multimedia CD-ROM

Raphael Hörner
Edition 2016, 216 pages, in color, in folder.

Campus license (➔ Page 55):

de	**8063315**
en	**8063317**
es	**8063318**
fr	**8063319**

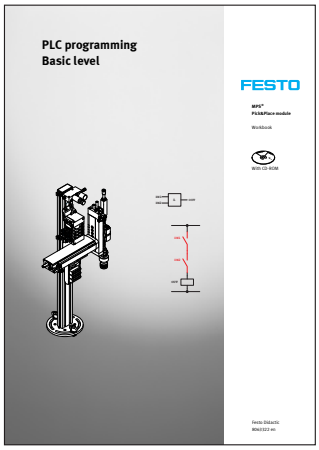

MPS® Pick&Place module, basic level PLC programming workbook
This workbook covers the fundamentals of PLC programming, using the MPS® Pick&Place module and a SIMATIC S7 1500 as hardware.

The workbook covers in-depth knowledge about the use and operation of the TIA portal.

The project exercises focus on the following topics:
– Commissioning the system
– Operating method of a PLC
– Logic operations
– Latching circuits
– Edge operations
– Time and counting functions

The workbook contains:
– Sample solutions
– Training notes
– Worksheets for the student
– Multimedia CD-ROM

Raphael Hörner
Edition 2016, 268 pages, in color, in folder.

Campus license (➔ Page 55):

de	**8063320**
en	**8063322**
es	**8063323**
fr	**8063324**

MPS® Pick&Place module, advanced level PLC programming workbook
Prerequisite is knowledge from the workbook “MPS® Pick&Place module, basic level PLC programming”. Building on this, the basics of GRAFCET, linear process controls and process controls with operating part are taught. The object-oriented approach provides an introduction to a modular software concept.

The students focus on the following topics:
– Development of a process control in GRAFCET and as an IEC process function plan
– Programming of a process control (with operating part) with GRAPH7 as well as with FCH
– Use of an operating panel

Finally, students work on solutions to programming an MPS® Station.

The workbook contains:
– Sample solutions
– Training notes
– Worksheets for the student
– Multimedia CD-ROM

Raphael Hörner
Edition 2016, 220 pages, in color, in folder.

Campus license (➔ Page 55):

de	**8063325**
en	**8063327**
es	**8063328**
fr	**8063329**

Mechatronics

Training documentation

Training documentation
Process optimization
With the basics of
– Analysis of existing systems
– Project plan
– Planning and optimization of automated systems
– Value creation and wastage

The detailed project task includes seven subsidiary tasks based on the example of the MPS® Distribution, Inspection, Processing, Handling and Sorting Stations. The project enables practical optimization of a production process, with material flow analysis, devising and appraising suggestions for improvement, procurement and production of components, programming and commissioning the optimized system.

Includes a CD-ROM with circuit diagrams, symbols, and sample programs for the Siemens PLC S7-300.

M. Bellenberg, T. Mehwald, H. Regber, G. Schmidt
Edition 2006, 310 pages, in folder; incl. CD-ROM.

Campus license (➔ Page 55):

de	**539934**
en	**574154**
es	**574155**
fr	**574156**

Communication-oriented approach to system malfunctions
The importance of maintenance and servicing, in particular with respect to malfunction management, cannot be underestimated in production.

The purpose of this textbook is to teach students how to reduce downtimes. Identifying failure modes, diagnosing malfunctions, and fixing faults requires both specialist knowledge and interpersonal communication skills. This practical textbook addresses the situation using the case example of a medium-sized, beverage bottling company: training scenarios portray realistic situations, that provide instruction in a range of faults from the simple to the cross-linked.

Includes a CD-ROM with presentations on the topic of communication, and troubleshooting, circuit diagrams, and function charts for the MPS® Distribution and sorting Stations, plus the textbook.

W. E. Theuerkauf, S. Funke, G. Graube
Edition 2006, 144 pages, in folder, incl. CD-ROM.

Campus license (➔ Page 55):

de	**543068**
en	**574157**
es	**574158**
fr	**574159**

Training documentation
“The safe system”
The training documentation entitled “The safe system” focuses on the safety of systems and machines, and is aligned to the new EC machinery directive. The MPS® Electrical Handling Station serves as a hardware example for the exercises. New project tasks, which build on each other deal with, issues including; failure modes and effects analysis, performance level, common cause failure, and diagnostic coverage. After completing a risk assessment for the station, other safety devices are addressed. The basic principles of the individual topics are also included in the training documentation.

The student learns to work with the issue of safety at the system, and is subsequently capable of describing components and functions. Solution sheets are available to the trainer. The workbook includes a CD-ROM containing the worksheets, data sheets, and solutions, as well as information on the subject of safety technology.

Jürgen Hasel, Andrea Meles
Edition 2011, 176 pages, in color, in folder.

Campus license (➔ Page 55):

de	**574143**
en	**574144**

Training documentation MPS®
Handling with industrial robots
This training documentation focuses on the use of industrial robots. The MPS® Robot Station with the robot handling module is used as the hardware example for the exercises. Seven project exercises that build on each other lead to successful processing of comparable industry scenarios via error-tolerant programming.

The MPS® Robot Station is presented step-by-step in the first exercise, after which students rely on structured teaching methods to complete a series of exercises that build on each other.

– Course-related theory
– Preparation in CIROS® (education) supported by customized working aids
– Verification in CIROS® (education)
– Validation of the solutions on real hardware via transmission of the solution with CIROS® Studio

The training documentation contains:
– Sample solutions
– Training notes
– Multimedia CD-ROM with programs and position lists
– Worksheets for the student

U. Karras
Edition 2016, 266 pages, color, in folder.

Campus license (➔ Page 55):

de	**8046573**
en	**8046575**

Mechatronics Assistant

Version 2, Model series 2000 – 2014

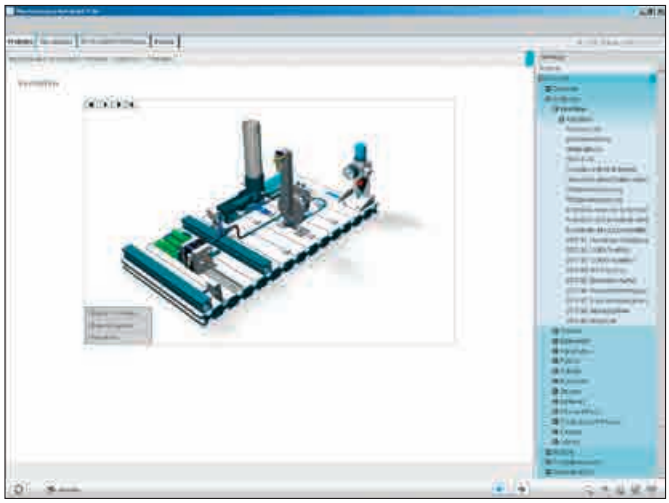

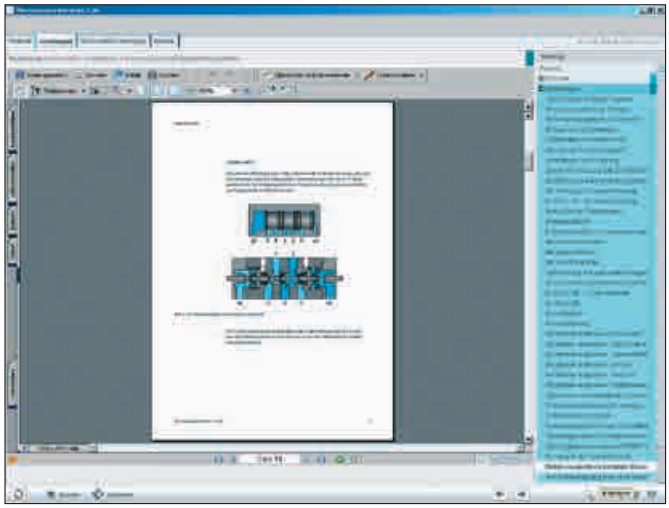

The multimedia tool for training at school and at work
- Structured DVD archive containing complete documentation
- For project work, as well as for training and test preparation
- For all training-related areas in the field of automation technology
- For teachers and students: structure and content have been organized to enable students to work on any task independently with the Mechatronics Assistant.

Content
- Practice and topic-related range of tasks with solutions
- Graphics, photos, animations, videos sequences, presentations
- Manuals, operating instructions, data sheets, and circuit diagrams
- Additional teaching aids and complete technical documentation, as well as numerous tips for working with MPS®

Your advantages
- Training with MPS® can begin immediately with **ready-to-use tasks** involving modules, stations, and systems.
- **Various degrees of difficulty for different levels of learning**: from introductory tasks to complex projects
- **Create your own archive**: all tasks can be easily modified and saved as individualized assignments.
- **Format documents to suit your individual needs** and reuse them: many of the documents included with the Mechatronics Assistant are available in source format (E.g., doc, ppt, dxf).
- Supplementary information and **cross-references can be accessed quickly by means of hyperlinks**.
- The **high-performance, full-text search function** retrieves content on demand. Graphics, animations, and videos are also linked to keywords and can be retrieved using the search function.
- **Always current via free updates**: you can download updates, new tasks, sample programs, and project ideas free of charge. Your Mechatronics Assistant develops as your knowledge increases: www.festo-didactic.com

Note
- Multiple licenses for local or network installations with any number of licenses, with online activation or dongle
- Can be installed in German, English or Spanish, as well as other languages upon request
- Shipped on DVD in Systainer

System requirements
- PC with Win XP/Vista/Windows 7
- Flash Player
- Microsoft Office
- Acrobat Reader
- DXF viewer
- Sound card
- DVD drive
- Screen resolution: at least 1024 x 768 pixel

x-License with online activation de/en/es/fr	**563358**
x-License with network license connector de/en/es/fr	**563359**
Mechatronics Assistant Update 1.0 – 2.0	
6 licenses with online activation de/en/es/fr	**562483**
6 licenses with network license connector de/en/es/fr	**562482**

MecLab®

MecLab®
Technology for secondary schools

Automation technology in school

Automation technology is one of the most important growth technologies in the world. Automated systems are to be found in virtually every area of life today.

Festo is the innovative leader in industry and process automation. And with our subsidiary Festo Didactic, we are the leading provider of learning and skills-development solutions.

With MecLab®, the new learning system for secondary schools, students gain insights into one of the most significant fields of application for automation technology – production technology.

The three MecLab® stations represent simplified models of typical processes to be found in any automated production plant.

The learning objectives of MecLab®

With MecLab® a wealth of teaching topics and curriculum requirements can be covered, because its contents can be adapted accordingly:
- Introduction to industrial production
- Using technical terms correctly
- Planning, developing and setting up technical systems
- Understanding and using technical documentation; creating and using schematic diagrams, circuit diagrams, parts lists and technical drawings
- Building models and creating simulations
- Understanding and applying open- and closed-control loop systems
- System thinking and understanding the interactions of subsystems
- Developing and constructing electric, electronic and pneumatic circuits
- Understanding and using pneumatic and electrical actuators, sensors and controllers
- Using computers as tools for programming and simulation

Realistic and fascinating

- MecLab® replicates real industrial production processes.
- Only industrial components are employed.
- The students are presented with a diverse range of modification, expansion and programming possibilities.

The tools required for making modifications are included. The wiring of the electrical components is simple and does not require tools, due to the use of standardized plugs. That lets you utilize MecLab® flexibly in your classes, however you prefer.

This award tells its own tale: Worlddidac Award 2008

Modular and flexible

The MecLab® stations can be used alone. Each one performs a practical function in itself, offering a wide range of learning possibilities and subject matter.

In addition, the stations can be joined together to form more complex “production lines”. This results in many opportunities for project work.

Thus, after a short initial training period, students can take on the role of engineers and start working with MecLab®. By interchanging components, the standard exercises can be expanded and changed.

The complete package

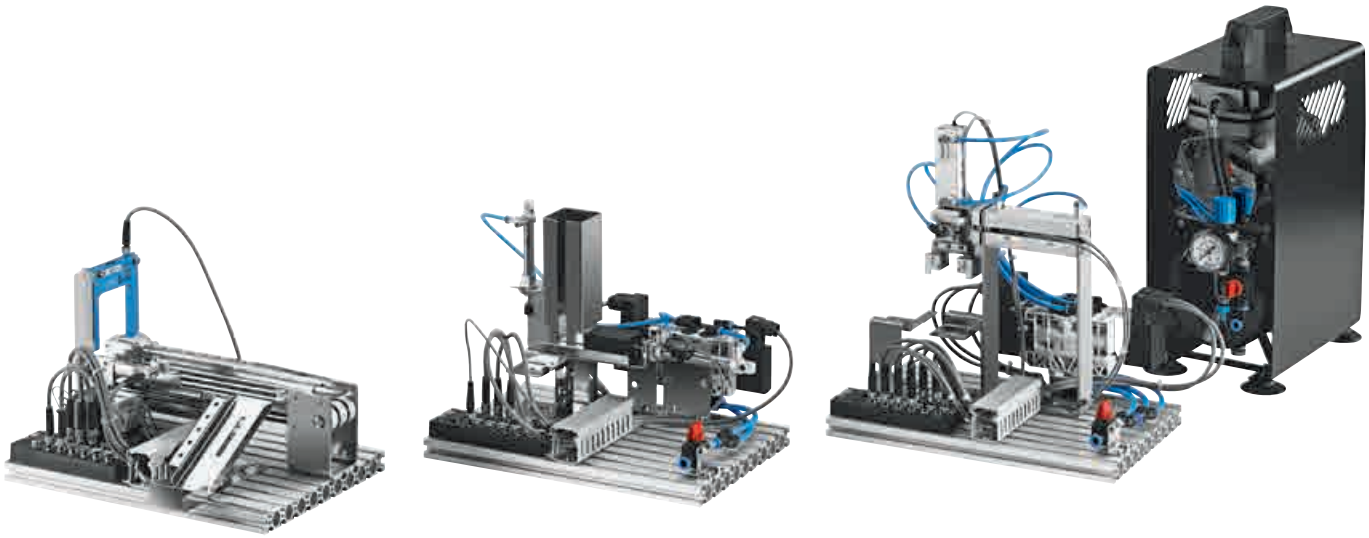

The hardware

MecLab® is delivered in practical, stackable systainers®, which function as storage units as well as transport packaging.

MecLab® is delivered fully assembled and ready for immediate use.

MecLab® is sturdy and fully capable of withstanding the rigors of a school environment.

The individual stations have different functions:
– The Stacking Magazine Station contains a workpiece storage container and a feed separator.
– The Conveyor Station can transport and sort workpieces.
– The Handling Station can grip the workpieces and deposit them at defined points.

The accompanying documents on CD-ROM

The complete package includes a CD-ROM with:
– Technical book: Fundamentals of automation technology
– Book of exercises with 5 – 7 exercises per station and prepared worksheets in *.doc format with solutions – these can be easily adapted to meet your particular requirements.
– Prepared PowerPoint presentations with extensive visual materials for use in class
– Videos
– Technical data for all components
– Workbook: Teaching with MecLab®

Control with FluidSIM® software

The stations are controlled with FluidSIM® software and the EasyPort interface.

FluidSIM® is the application for creating and simulating pneumatic and electrical circuits and programmable logic controllers. With its universal PC interface, FluidSIM® can control the MecLab® stations directly. As a result, students can follow a continuous functional chain from the circuit diagram to simulation to control.

Since FluidSIM® is supplied as a classroom license, the number of students who can work with FluidSIM® at one time is limited to six per station. They can use it to try out their solutions in simulation before testing them on the real station. Moreover, FluidSIM® provides information at the click of a mouse button about all components, and many informative animated sequences.

The complete package

Contains everything you need for working with MecLab®:
– 1 Stacking Magazine Station
– 1 Conveyor Station
– 1 Handling Station
– 1 compressor 230 V with connector for DE, FR, NO, SE, FI, PT, ES, AT, NL, BE, GR, TR, IT, DK, IR, ID or 1 compressor 110 V with connector for US, CA, Central America, BR, CO, YU, EC, KR, TW, TH, PH, JP
– 3x EasyPort to connect the stations to the computer
– 3x power supply unit with connector for DE, FR, NO, SE, FI, PT, ES, AT, NL, BE, GR, TR, IT, DK, IR, ID or 3x power supply unit with connector for US, CA, Central America, BR, CO, YU, EC, KR, TW, TH, PH, JP
– FluidSIM®
– Documents on CD-ROM
– Workpieces
– Tools
– Screw set
– 3x Systainer®

Complete package

230 V	**549786**
110 V	**556276**

The Stacking Magazine Station and the Conveyor Station

1

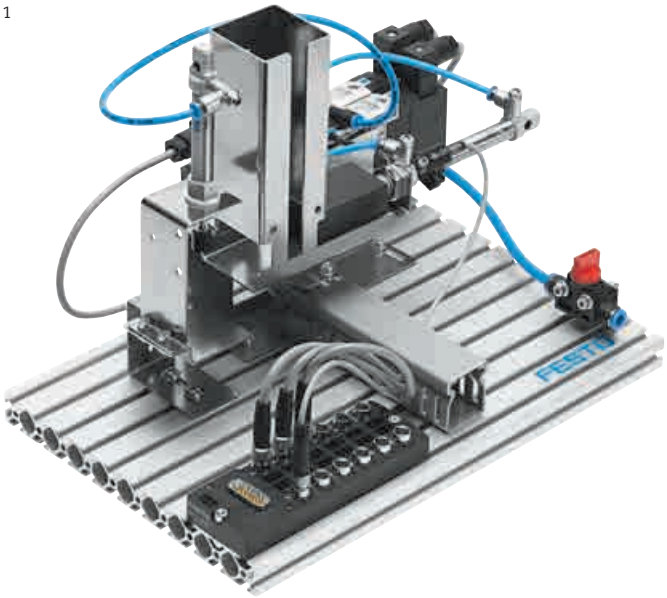

2

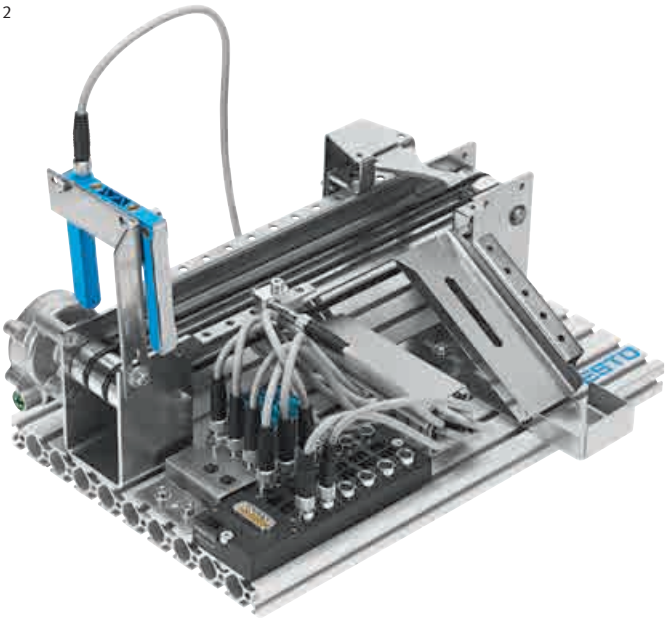

1 **Stacking Magazine Station**

Functions
In any automated production line, workpieces must be stored and fed into the production process in an orderly way. In MecLab® that is the job of the Stacking Magazine Station. It can store both workpieces (lid and can) in the arrangement desired, and can separate them out for feeding. The workpieces stored in the tower magazine are pushed out by the horizontally positioned cylinder. The vertically positioned cylinder can then replicate a press-fit process (e.g. pressing a lid onto a can). All processes are controlled electro-pneumatically. A magnetic limit switch can be used to record the position of a cylinder.

Technical learning objectives
– Fundamentals of pneumatics
– Single-acting cylinders
– Double-acting cylinders
– Solenoid valves
– Sensor technology – magnetic limit switches
– Connecting tubing and wiring
– Relay control systems

Scope of delivery
– Stacking Magazine Module
– Press-fit unit module
– Multi-pin plug distributor
– 2 solenoid valves
– 2 cylinders
– 1 magnetic limit switch
– Aluminum slotted assembly board
– Tool set
– Workpieces
– Systainer®
– Equipment trays
– CD with FluidSIM® and documents

2 **Conveyor Station**

Functions
Transporting workpieces from one Manufacturing Station to the next is an important task in production. In the real world, driverless transport systems, forklift trucks and above all conveyor belts are used for this purpose. The conveyor in MecLab® allows realistic simulation of an industrial workpiece transport system. The drive motor can run forwards and backwards; workpieces can be detected with the sensors and distinguished from one another. The solenoid allows workpieces to be separated or rejected onto the slide.

Technical learning objectives
– Activation of direct current motors
– Inductive sensors
– Opto sensors
– Relay circuits
– Polarity reversal circuits
– PLC programming
– Control using logic operations
– Construction and wiring

Scope of delivery
– Conveyor Belt Module with
– DC motor
– Solenoid as stopper/deflector
– Multi-pin plug distributor
– Inductive sensor
– Opto sensor (light barrier)
– Aluminum slotted assembly board
– Tool set
– Workpieces
– Systainer®
– Equipment trays
– CD with FluidSIM® and documents

1 Stacking Magazine Station	**548704**
Necessary accessories	
Control package	549787
Compressor ➔ Page 75	
2 Conveyor Station	**548705**
Necessary accessories	
Control package	549787

Handling Station and Expansion set

1 **Handling Station**

Functions
No matter whether it's a simple depositing operation or highly complex assembly work – handling systems are always involved. Handling devices range from simple, two-axis handlers up to highly complex industrial robots with six axes. The handler in MecLab® consists of pneumatic cylinders with plain-bearing guides and has two axes. The workpiece is held by a gripper which is likewise pneumatically driven. The handler can transport the workpiece from one station to another or can join two workpiece halves together.

Technical learning objectives
– Fundamentals of pneumatics
– Double-acting cylinders
– Gripper
– Solenoid valves
– Sensor technology – magnetic limit switches
– Connecting tubing and wiring
– Relay control systems
– Control with logic
– PLC controllers
– Sequencing

Scope of delivery
– Handling Module
– 3 solenoid valves
– 4 magnetic limit switches
– 2 pneumatic cylinders with plain-bearing guide
– 1 pneumatic gripper
– Multi-pin plug distributor
– Aluminum slotted assembly board
– Tool set
– Workpieces
– Systainer®
– Equipment trays
– CD with FluidSIM® and documents

2 **MecLab® Expansion set**

This expansion set contains a range of components for realising your own project ideas. All in a practical Systainer®, of course.

Content
– Two double-acting cylinders with one-way flow control valves
– 2 solenoid valves
– 1 diffuse sensor
– 2 magnetic limit switches
– 1 profile kit
– 1 profile plate
– 1 electrical button
– 1 electrical switch
– 1 indicator light

1

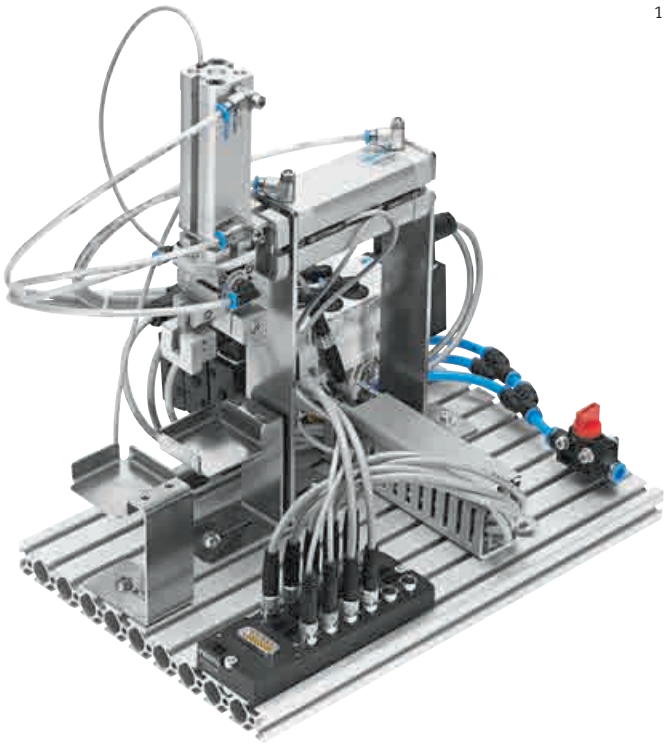

2

1 Handling Station	**548706**

Necessary accessories

Control package	549787
Compressor ➔ Page 75	

2 MecLab Expansion set	**556245**

Control options

1

2

3

4

1 **The control package EasyPort Mini EasyKit with power supply unit and connecting cables**
The EasyPort Mini process interface is used for the bidirectional transmission of process signals between a real control process in low-voltage technology (24 V) and a PC. Maximum of one EasyPort Mini module can be connected to the PC via the USB interface.

EasyPort Mini EasyKit
– 6 digital input and output channels
– Maximum current per output channel 0.5 A, 24 V
– Digital input switching threshold 5.2 V hysteresis 1.4 V
– Power supply 24 V DC ±10 %, 3 VA power consumption
– The statuses of the digital inputs/outputs and the module's ID appear at a graphic display.
– EasyLab software can also be used to program the module
– USB 2.0 interface to connect to a PC via mini USB socket
– Including micro USB 2.0 connecting cable
– Short circuit proof
– Dimensions: 43 x 40 x 44 mm

Power supply unit
– 24 V DC output voltage
– Output current max. 2.5 A
– Supply voltage 100 – 240 V, 1.3 A, 50 – 60 Hz
– Short circuit proof
– Dimensions: 49.5 x 114.5 x 33 mm

Order no.	**8075749**

Necessary accessories

Mains cable for small appliances
➔ Page 75

2 **Trainer Package LOGO! 8**
With LOGO! 8, the successful Siemens logic module enters the next generation.
– Display with new look and feel
– Ethernet communication
– Integrated web server
– New software in new design.

Package includes:
– 6x LOGO! 12/24 RCE (V8) with 8 digital inputs and 4 digital outputs
– 6x extension modules with 4 additional digital inputs and 4 digital outputs
– 6 copies of programming software LOGO! Soft Comfort V8

Order no.	**8040049**

Set of 4 LOGO! USB PC cables
(not shown)

Order no.	**556237**

3 **Connecting cable**
Connecting cable with 15-pin sub-D connector and free cable ends.
– For connecting a Logo! to the multi-pin plug distributor of a MecLab® station.
– Connecting cable for the end-position controller SPC 11 with 4 mm safety plugs.

Order no.	**177673**

Connecting cable SysLink – Sub-D
(not shown)
Cable for connection MecLab® stations with sub-assemblies that have a 24-pin SysLink plug.

Order no.	**560752**

4 **Training program LOGO! Training**
The LOGO! training program provides an introduction to logic functions, beginning with AND & OR functions and processes, which are shown in function tables. These are followed by other basic control functions, such as memory, timer, and counter functions. The next part of the course begins by covering the basics of open- and closed-loop control circuits and exploring the elements of a controller. Finally concluding with a detailed focus on the features and applications of mini-controllers.

From the contents:
– Basic technical functions (AND & OR function, memory function, timer function, counter function)
– Digital minicontrollers (differentiation between open- and closed-loop control)
– Control components
– Positioning with digital minicontrollers
– Design and function of a minicontroller
– Cyclical program processing
– Areas of application
– Programming languages

Training time: approx. 2 hours

E.g. single license on CD-ROM, with online activation DE/EN/ES/FR

Order no.	**540941**

with network license connector DE/EN/ES/FR

Order no.	**540943**

Compressors and power supply units

1 **Compressor for MecLab®**
Low-cost compressor for MecLab®. Only 54 DB (A), therefore well suited for use in classrooms.
Supplies up to 4 stations.
– Pressure: max. 400 kPa (4 bar)
– Suction capacity: 14 l/min
– Reservoir capacity: 2,5 l
– Dimensions: 310 x 150 x 370 mm

Design: 230 V/50 Hz, 135 W
With mains cable suitable for:
DE, FR, NO, SE, FI, PT, ES, AT, NL, BE, GR,TR, IT, DK, IR, ID
Order no. **548707**

Design: 110 V/60 Hz, 70 W
With mains cable suitable for:
US, CA, Central America, BR, CO, YU, EC, KR, TW, TH, PH, JP
Order no. **556275**

2 **Compressor**
Oil-lubricated, extremely quiet (45 dB (A)) compressor. Ideally suited for use in classrooms. With pressure regulator and water separator.
Supplies up to 8 stations.
– Pressure: 800 kPa (8 bar)
– Performance: 50 l/min
– Reservoir capacity: 25 l
– Compressed air outlet: ¼”

Design: 230 V/50 Hz
With power cable suitable for:
DE, FR, NO, SE, FI, PT, ES, AT, NL, BE, GR, TR, IT, DK, IR, ID
Order no. **91030**

Design: 100 – 120 V/50 – 60 Hz
With fully insulated socket
Order no. **565440**
Necessary accessories
Mains cable

Accessories:
Coupling socket, coupling plug, tubing
Order no. 102725

3 **Tabletop power supply unit**
– Input voltage: 85 – 265 V AC (47 – 63 Hz)
– Output voltage: 24 V DC, short-circuit-proof
– Output current: max. 4.5 A
– Dimensions: 115 x 155 x 200 mm
Without power cable
Order no. **162416**
With power cable, 1.3 m, suitable for:
DE, FR, NO, SE, FI, PT, ES, AT, NL, BE, GR, TR, IT, DK, IR, ID
Order no. **162417**
US, CA, Central America, BR, CO, EC, KR, TW, TH, PH, JP
Order no. **162418**
GB, IE, MY, SG, UA, HK
Order no. **162419**
AU, NZ, CN, AR
Order no. **162380**
CH
Order no. **162381**
ZA, IN, PT, SG, AE, HK, (GB)
Order no. **162382**

4 **Power cable**
One side designed as a connector and one side with a country-specific plug.
DE, FR, NO, SE, FI, PT, ES, AT, NL, BE, GR, TR, IT, DK, IR, ID
Order no. **247661**
US, CA, Central America, BR, CO, EC, KR, TW, TH, PH, JP
Order no. **350362**
GB, IE, MY, SG, UA, HK
Order no. **350363**
AU, NZ, CN, AR
Order no. **350364**
CH
Order no. **350366**
ZA, IN, PT, SG, AE, HK, (GB)
Order no. **350367**

5 **Mains cable for small appliances**
One end designed as a C7 IEC power socket and one end with a country-specific plug.

Connector as per CEE 7/VII for DE, FR, NO, SE, FI, PT, ES, AT, NL, BE, GR, TR, IT, DK, IR, ID ,CH, ZA, IN, PT, HK, (GB), (AE)
Order no. **8060968**
Connector as per BS 1363 for GB, IE, MY, SG, UA, HK, AE
Order no. **8060969**
Connector as per AS 3112 for AU, NZ, CN, AR
Order no. **8060970**
Connector as per NEMA 5-15 for US, CA, Central America, BR, CO, EC, KR, TW, TH, PH, JP
Order no. **8060971**

1


2


3


4


5


Extensions for sensors

1


2


3


4


5


6


7


8


9


10


With these components, new functions can be implemented with MecLab®. The perfect extension of MecLab® for project work.

1 **Connecting cable between MecLab® stations**
Cable data connection between two MecLab® stations. Connects the input channel of one station to the output channel of another station. Length 0.5 m, with two 3-pin M8 plugs.

Order no.	**549790**

2 **Sensor/actuator cable M8/M8, 50 cm**
Extension cable with 3-pin M8 plug connector or socket for extending sensor or actuator cables.

Order no.	**175488**

3 **Light barrier**
Fork light barrier, fork gap 50 mm, complete with connecting cable and mounting accessories.

Order no.	**549791**

4 **Retro-reflective sensor**
Fiber-optic diffuse sensor, complete with optical fibers, connecting cable and mounting accessories.

Order no.	**549792**

5 **Inductive sensor**
Inductive sensor, cylindrical design with M5 male thread, 0.6 mm sensing distance, complete with connecting cable and mounting accessories.

Order no.	**549793**

6 **Tool set**
The tool set is an aid to easy working on stations.
A practical mini-systainer® includes:
– 200 mm steel rule
– Open-jawed spanners size 7, 8, 9, 10
– Adjustable spanner
– Side cutter
– Insulation-stripping pliers
– Wire end sleeve pliers
– Screwdriver set, hex, 1.5 – 6
– Screwdriver, hex, 0.9; 1.3
– Screwdriver, cross-head, PZ02 – short
– Screwdriver, flat, 2.5 x 75; 4.0 x 100
– Screwdriver, flat, 1.2 – 1.6
– Tubing cutter
– Fiber-optic cable cutter
– Workpiece, red, black, silver
– 100 x cable binders 2.5 x 100
– 100 x wire end sleeves 0.25
– 100 x wire end sleeves 0.75

Order no.	**539767**

7 **Magnetic limit switch**
Limit switch for detecting the pneumatic cylinder piston position, for round and profile cylinders, with connecting cable.

Order no.	**543861**

8 **Mounting of proximity switches on circular cylinders**
Kit for magnetic limit switch, Order no. 543861, on circular cylinders.

Order no.	**175092**

9 **Magnetic limit switch for gripper**
Limit switch for detecting end positions at the gripper on the Handling Station.

Order no.	**526679**

10 **Signal input/output**
– 1 electrical button (NO and NC contacts)
– 1 switch
– 1 indicator light each
Complete with mounting materials and connecting cable.

Order no.	**556249**

Extensions for actuators

1 **Stopper/deflector**
Solenoid for mounting on both sides of the conveyor, stopper or deflector function, complete with connecting cable and mounting accessories.

Order no.	**549795**

2 **Bistable 4/2-way solenoid valve**
Manual override with detent, complete with fittings, silencer, mounting bracket and mounting screws.

Order no.	**549803**

3 **Monostable 4/2-way solenoid valve**
Monostable 4/2-way solenoid valve, can be converted to 3/2-way function, manual override with detent, complete with fittings, silencer, mounting bracket and mounting screws.

Order no.	**549804**

4 **Stamping unit**
Press-fit unit for attaching to the Stacking Magazine Station or Conveyor Station, comprising single-acting cylinder with 25 mm stoke and 10 mm diameter, complete with one-way flow control valve, mounting bracket and mounting screws.

Order no.	**549805**

5 **Double-acting cylinder**
Double-acting cylinder, 10 mm diameter, 50 mm stroke, complete with one-way flow control valves, foot mounting and mounting bolts.

Order no.	**556248**

6 **Vacuum gripper**
Handling Station vacuum gripper kit as a substitute for the mechanical gripper, complete with vacuum generator, 20 mm diameter suction gripper and mounting accessories.

Order no.	**549796**

7 **Stop cock**
Manually operated stop cock with 3/2-way function for tubing diameters of 6 mm, complete with mounting bracket and mounting screws.

Order no.	**549809**

8 **T-distributor**
T-distributor for plastic tubing, 2 of each for tubing diameters 4 mm and 6 mm.

Order no.	**549810**

9 **Plastic tubing**

4 x 0.75 Silver 10 m	**151496**
3 x 0.5 Silver 5 m	**197118**
6 x 1 Silver 5 m	**152963**

Minimum order quantity/packaging unit quantity: 50 m

4 x 0.75 Silver	**152584**
4 x 0.75 Blue	**159662**
4 x 0.75 Black	**159663**
4 x 0.75 Red	**178410**
4 x 0.75 Yellow	**178417**
4 x 0.75 Green	**178424**

10 **Blanking plugs**
Blanking plug for sealing QS-4 fittings of valves, for example. Nominal diameter 4 – QSC-4H

Minimum order quantity/packaging unit quantity: 10 pieces

Order no.	**153267**

1


2


3


4


5


6


7


8


9


10


Mechanical components

1


2


3


4


5


6


7
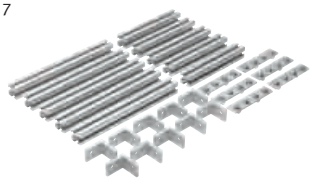

8


9


10


1 **Slide**
Slide for transporting or storing workpieces, 40 mm in diameter, for maximum 3 workpieces, mounting surface for sensors and actuators. Complete with mounting accessories.
Order no. **549797**

2 **Tray, low**
Holding tray for retaining workpieces 40 mm in diameter and 39 mm in height. Complete with mounting accessories.
Order no. **549798**

3 **Tray, high**
Holding tray for retaining workpieces 40 mm in diameter and 62 mm in height. Complete with mounting accessories.
Order no. **549799**

4 **Workpiece set**
Workpiece set consisting of 6 plastic cans in silver, red and black (2 of each), diameter 40 mm, height 25 mm, and 6 lids.
Order no. **549800**

5 **Rail**
Cover for ejecting opening in the conveyor, length 140 mm, with mounting surface for sensors or actuators. Complete with mounting accessories.
Order no. **549801**

6 **Profile connector**
Connector for two aluminum slotted assembly boards with 20 mm grid dimension. Complete with mounting screws.
Order no. **549802**

Screw kit MecLab®
Bag of replacement screws and T-head nuts (not shown).
Order no. **556255**

Rubber ring conveyor
The conveyor belt of the Conveyor Station is a wearing part and deliverable as a spare part (not shown).
Order no. **701221**

7 **Assembly kit**
Selection of aluminum profiles, 20 x 20 mm in lengths of 120 and 180 mm. Complete with mounting materials.
Order no. **556247**

8 **Profile plate for MecLab®**
Profile plate with dimensions 200 x 300 mm, thickness 20 mm, slot spacing 20 mm. Complete with self-adhesive rubber feet.
Order no. **556246**

9 **Systainer® with T-LOC system**
Stackable and interlocking case system, made of light gray plastic with light blue T-LOC rotary locks, one-hand operation, for opening and interlocking the Systainers®. With four slots for credit-card-sized labels or markings.

Size I: external 105 x 396 x 296, internal 75 x 383 x 267
Order no. **8022295**
Size II: external 157.5 x 396 x 296, internal 127.5 x 383 x 267
Order no. **8022296**
Size III: external 210 x 396 x 296, internal 180 x 382 x 266
Order no. **8022297**
Size IV: external 315 x 396 x 296, internal 285 x 382 x 266
Order no. **8022298**
Size V: external 420 x 396 x 296, internal 384 x 381 x 265
Order no. **8022299**
(Dimensions in mm H x W x D)

10 **Dolly truck for Systainer®**
Dolly truck for transporting T-LOC and Classic Line Systainers® sizes I to V. Four guide rollers, two of which have locking brakes.
Order no. **549789**

Transport roller for Systainer®
Transport roller with roller board and handcart function for transporting Systainers® of size I to V. With large wheels, rotating front rollers, integrated drawer and fixing strap (not shown).
– Load bearing capacity: 100 kg
– Dimensions:
  H 1100 x W 600 x D 440 mm
– Weight: 6.5 kg
Order no. **549788**

MecLab®

Digital training programs and print media

Digital training programs

Excellent solutions for ...
– learning and teaching
– programming
– experimentation
– simulation
– visualization
– management
– play
– operation and observation

... and more in digital format.

To complement the teaching potential of MecLab®, we recommend the following learning programs:
– WBT Fascination of technology
– WBT LOGO! Training
– WBT Actuators – DC motor
– WBT Open- and closed-loop control
– WBT Pneumatics
– WBT Electropneumatics
– WBT Electrical engineering 1 and 2
– WBT Electronics 1 and 2
– WBT Sensor technology 1 and 2

Detailed information and free demo versions:
➔ www.festo-didactic.com

Courseware

Theory and practice – tailored to meet your needs, we have a wide range of textbooks and workbooks, dictionaries, sets of overhead transparencies, posters and other work materials.

Our recommendations for MecLab®:
– Technical book: Fundamentals of automation technology
– Textbook: Pneumatics, Basic level
– Textbook: Electropneumatics, Basic level
– Textbook: Proximity sensors
– Practical knowledge: Basic pneumatic controllers
– Set of posters on pneumatics

Detailed information, free sample extracts, and online download of books:
➔ www.festo-didactic.com

MecLab®

Integrative STEM education and MecLab®

A comprehensive, turnkey STEM solution

Integrative STEM (**S**cience, **T**echnology, **E**ngineering, and **M**athematics) education is about intentionally combining math and science concepts with technology and engineering skills to solve problems. Students who engage in integrative STEM projects in order to solve authentic problems develop communication and collaboration skills, as well as sustained interest in STEM disciplines and increased competency levels.

Festo offers a turn-key solution for implementation of high school STEM programs that incorporates the problem-based learning environments schools need.

Each of the fifteen courses in our STEM solution allows students the opportunity to explore real-world problems, reflect on the problem solving process, develop design solutions, and solve problems in science, technology, engineering, and math fields.

Courses combine learning systems with multimedia training content, and relate to mechatronics, advanced manufacturing, and environmental discovery.

Our integrated approach to STEM emphasizes innovation, problem-solving, critical thinking, and creativity using hands-on training systems, enabling students to complete projects using the engineering design process while integrating the concepts related to STEM disciplines in a “learning-by-doing” environment.

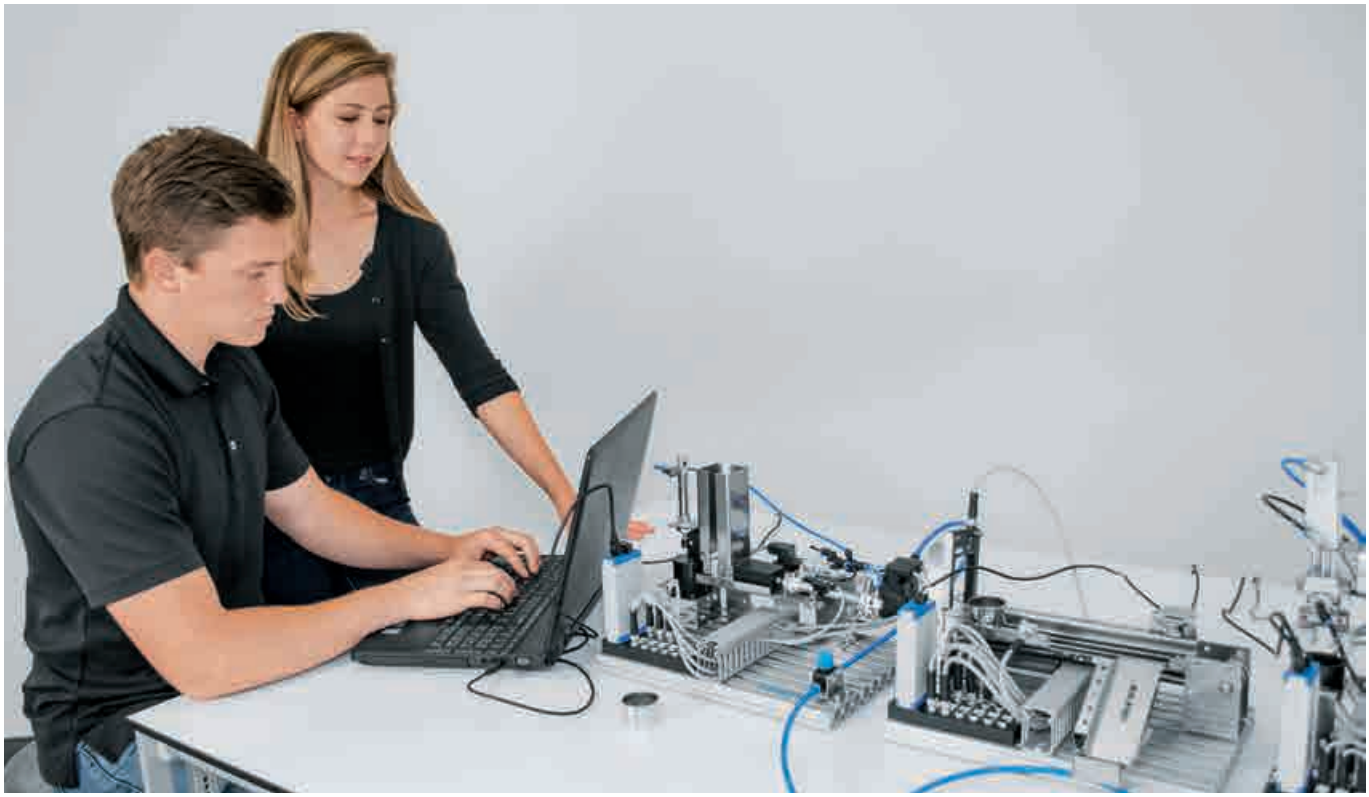

MecLab® as a means for tackling mechatronics

The purpose of the STEM "Exploring Mechatronics" course is to provide students the opportunity to explore automation technology and the mechatronic systems essential for efficient manufacturing.

Students will be challenged to design an automated system by taking on the role of a mechatronics engineer. They must adhere to the specifications and constraints given and explore the interaction between mechanics, electrical engineering, electronics, and computer engineering disciplines to develop task-handling systems that help speed up time-consuming processes or processes that are unsafe for a human to perform.

MecLab® is the main hardware equipment for the course Exploring Mechatronics. It is designed to support STEM concepts with computerized control of fluid power devices.

Common automation technologies that are part of the MecLab® system include pneumatics, PLC logic control, sensor technology, relay control, basic electricity, and DC motor controls.

Students solve the same industrial motion control problems that industrial engineers face daily in a production environment.

Students will observe and measure electrical and fluid power laws as they design systems to move, assemble, and sort work pieces within the system modules. They will gain the ability to design and evaluate production processes and procedures, based on the efficiency of motion and energy conservation.

Control technology – PLC, operation and networking

Some training solutions included in this product guide do not yet fully comply with EU directives regarding safety, health, and environmental protection (CE marking). A special note was added to the description of such products. If you are interested in one of them, but require such compliance, please contact your Festo sales representative.

Overview of EduTrainer® Universal

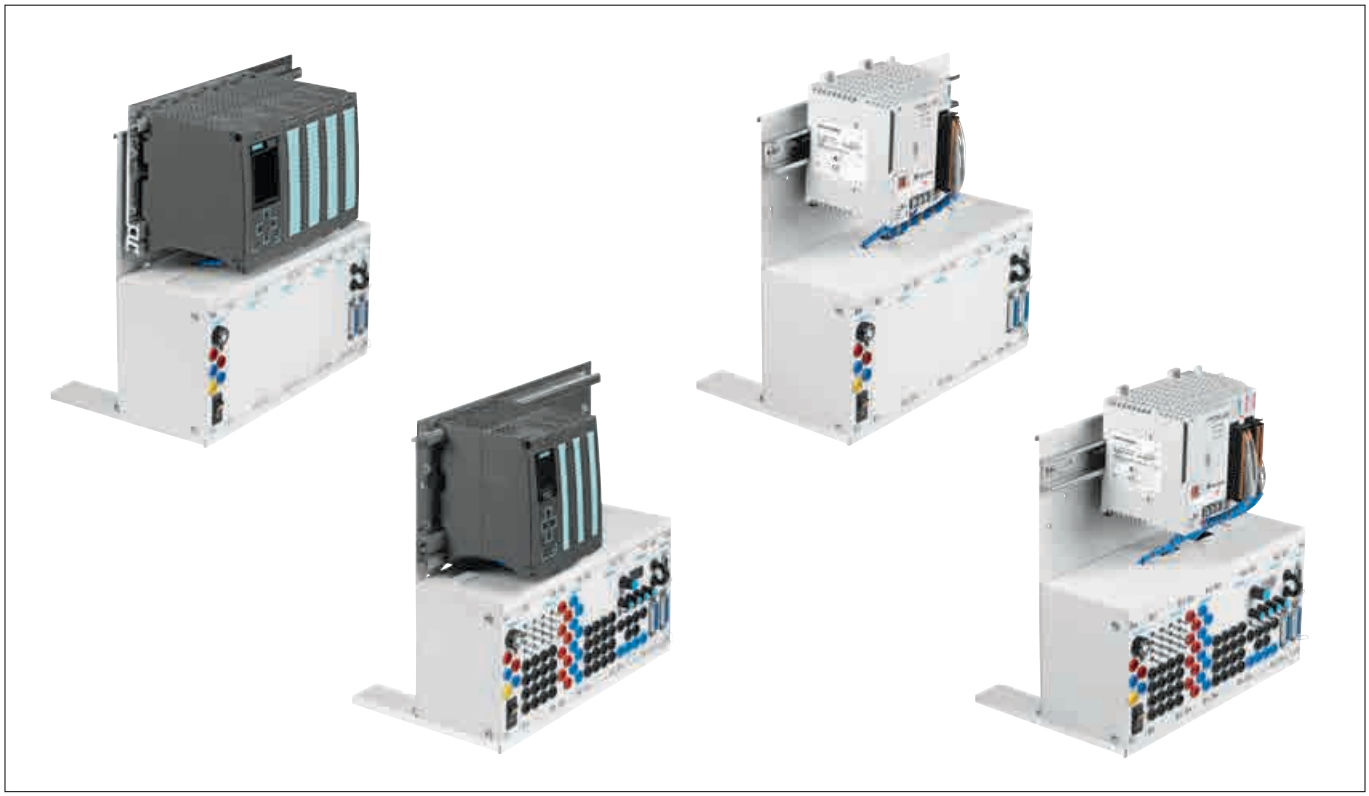

The EduTrainer® Universal
Do you use PLCs from global market leaders or less well-known but innovative control concepts? Does your training tend to focus on mastering processes and technologies rather than safe handling of wires and screwdrivers?

If so, the EduTrainer® Universal is the right solution for you!

No matter what is most important to you, you can get exactly the EduTrainer® Universal that you need:
- Fully set up and configured or your own design (online configurator)
- With PLCs from Siemens, Allen-Bradley, Festo and other manufacturers
- With or without
  - Power supply unit
  - 4 mm safety sockets
  - SysLink system interface

Universal shape and size
The EduTrainer® Universal deserves its name:
- It fits in A4 and ER mounting frames.
- It fits in an MPS® station.
- However, it can also stand on a table or lie flat.
- It comes as a fully configured standard Preferred version – or you can customize it yourself.
- Available in narrow and wide versions.

Universal design
There are many more than just 5 or 6 manufacturers of programmable logic controllers worldwide. The EduTrainer® Universal is designed for different H-rails so that it can be fitted with any PLC. Below the PLC, the 19” plug-in format ensures that the EduTrainer® can be equipped with any conceivable combination of connecting plates and simulation modules. A range of simulation modules allows for many different processes to be connected and simulated during the training.

Tec2Screen® in control technology
The all-in-one device Tec2Screen® offers suitable simulations for exciting and realistic training in the field of control technology. Controllers and applications can thus be quickly tested and simulated – independent of the programming language and PLC. Simulations replace large and complex systems that take up space and cost money.

Our range of simulations for Tec2Screen® ➔ Pages 38 – 41

Overview of EduTrainer® Compact

The EduTrainer® Compact
Do you want to teach PLC programming in addition to relay circuits at your pneumatic or hydraulic laboratory? Do you want a device that suits your workbench? Does your training tend to focus on mastering processes and technologies rather than safe handling of wires and screwdrivers?

The EduTrainer® Compact is the ideal control system for pneumatics and hydraulics and has proven itself worldwide.

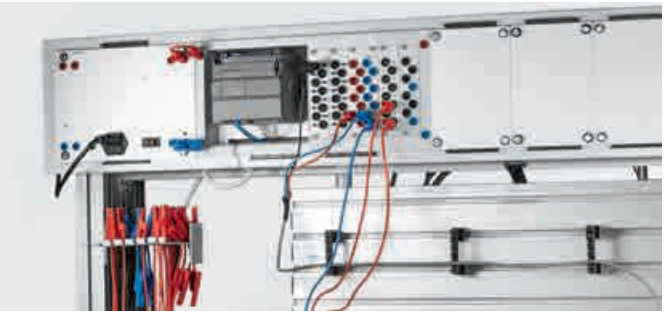

The EduTrainer® Compact can be integrated into the ER mounting frames of various laboratory systems or used as stand-alone desktop devices. The sensors and actuators are connected to the inputs/outputs of the PLC via 4 mm safety sockets. The inputs can be simulated with switches or potentiometers. Depending on the configuration, 4 mm safety sockets or SysLink universal I/O interface sockets are available. This provides many different options for connecting to all Festo Didactic equipment sets.

- The heavy-duty PLC for pneumatics or hydraulics laboratories
- Suitable for an ER mounting frame
- Fully set up and configured or your own design (online configurator)
- With PLCs from Siemens, Festo and other leading manufacturers
- External voltage supply via 4 mm safety sockets
- With or without 4 mm safety sockets
- With or without SysLink system interface

How to select the right EduTrainer®

We recommend the
Preferred version from the catalog
Simply select an EduTrainer® from the following pages or from the website.

The benefits to you:
– Cost-effective solution
– Completely harmonized technology
– Quick delivery

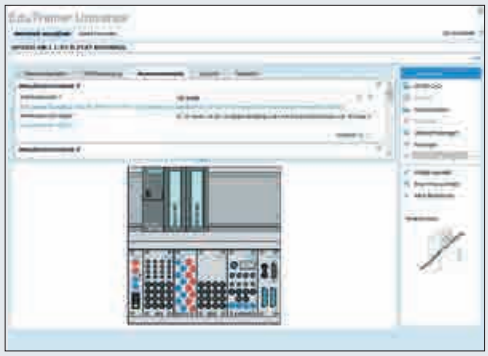

Online configuration with listed PLCs
If you cannot find a suitable Preferred version, an EduTrainer® can be configured with one of the PLCs offered in our online configurator (➔ www.festo-didactic.com). You can configure the required EduTrainer® yourself and order it from us.

The benefits to you:
– Customized solution
– Easy to select from listed components

Online configuration with other PLCs
If the desired PLC is not listed in the online configurator, an EduTrainer® can be configured with the required PLC as an EduTrainer "with special PLC."

The benefits to you:
– Customized solution
– Any PLC available on the market (as long as external dimensions and connections are compatible)

Online configuration for self-installation of PLC
You can configure an EduTrainer® "without PLC" if you already own the PLC and would like to install it yourself or if you want to make your own changes and modifications to the EduTrainer.

The benefits to you:
– Maximum flexibility in designing the device
– Any PLC available on the market (as long as external dimensions and connections are compatible)

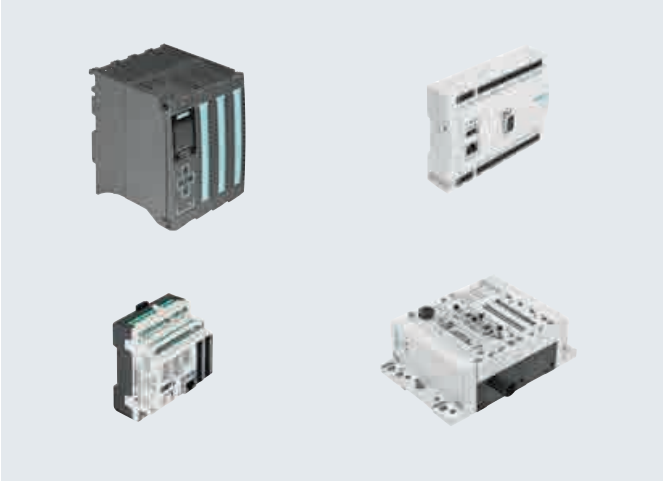

Control systems and PLC modules
In addition to EduTrainers®, we also offer you individual controllers or controller components:
– All Siemens trainer packages and individual controllers
– Festo components
– Allen-Bradley components
– Controllino (Arduino-based compact controller)
– And others

Note: If you do not have the controller or Siemens Trainer Package you need, please visit our website or request the controller directly from us.

More controllers that suit your requirements can be found at ➔ www.festo-didactic.com. See "online configurator"

EduTrainer® Universal Preferred versions Laboratory

A4 rack with SIMATIC S7-1200 and 19” simulation modules

1

Bundle of 6

1 6x S7-1200-TP	**567240**
2 6x S7-1200-TP	**567242**

Notes

Order no. 567240 and 567242 are based on Siemens SCE Trainer Packages and contain six EduTrainers® each, including programming cable (Ethernet cable) and STEP 7 Basic programming software. When Siemens updates these Trainer Packages, the controllers are replaced by the successor models. Subject to technical implementation.

Recommended accessories:

I/O data cable with SysLink connectors (IEEE 488), 2.5 m	34031
Analog cable, parallel, 2 m	529141
Safety laboratory cable, 3 m	571817
IEC power cable 90° ➔ Page 115	

Other accessories:

Analog cable, crossover, 2 m	533039

2

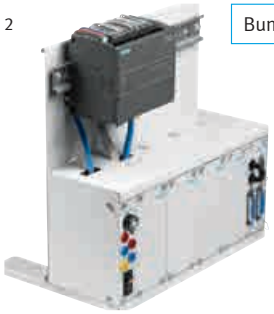

Bundle of 6

Special license rules apply for schools and educational institutes in the commercial sector.

The modular mini control system from Siemens

For solutions in discrete and stand-alone automation applications in the lower performance range.

The SIMATIC S7-1200 controller family has an integrated engineering system: SIMATIC STEP 7 Basic for controllers and HMI

EduTrainer® Universal with:

CPU S7-1214C
– 75 kByte main memory, 4 MByte program memory
– Interface: RJ45
Inputs/outputs:
– 14 digital inputs (24 V DC)
– 10 digital outputs (24 V DC, 500 mA)
– 2 analog inputs, 10 bit (0 – 10 V)

CPU module:

Analog output SB 1232 AQ
– AO 1x 12 Bit (± 10 V DC/0 – 20 mA)

The holder system
– EduTrainer® Universal, size 1, W x H 305 x 300 mm
– 19” module simulation plate with 2x SysLink plug connector for MPS® station and control panel, each with 8 digital inputs and 8 digital outputs and 1x Sub-D 15-pin plug connection with 4 analog inputs and 2 analog outputs; emergency stop jumper to connect a safety circuit for disconnecting 8 digital outputs.
– Integrated 110/230 V/24 V, 4 A power supply unit
– Can be placed on a desk or in an MPS® station
– Stable, powder-coated, sheet-steel holder system
– Can be expanded with 19” simulation modules (only order no. 567242)

Order no. 567240 includes all the required equipment with simulation modules:
– 19” module 16IN (12 HP), 16 digital inputs on 4 mm safety sockets and 16 switches/push-buttons for signal simulation
– 19” module 16OUT (12 HP), 16 digital outputs on 4 mm safety sockets
– 19” module 4AIN/2AOUT (12 HP), analog processing 4 analog inputs on 4 mm safety sockets can be switched to simulation via potentiometer and 2 analog outputs on 4 mm safety sockets
– 19” module 24 V/0 V (9 TE), 8x 4 mm safety sockets, red for 24 V distribution, 8x 4 mm safety sockets, blue for 0 V distribution

EduTrainer® Universal Preferred versions Laboratory

A4/A4 rack with SIMATIC S7-1500 and 19” simulation modules

New

1

1	S7-1512C-1PN	**8065595**
2	S7-1516-3PN/DP	**8042524**
3	S7-1516F-3PN/DP	**8034574**

Notes

Order no. 8065595, 8042524 and 8034574 are based on Siemens SCE Trainer Packages and each one contains one EduTrainer® including programming cable (Ethernet cable) and programming software STEP 7 TIA portal. When Siemens updates these Trainer Packages, the controllers are replaced by successor models. Subject to technical implementation.

Recommended accessories:

I/O data cable with SysLink connectors (IEEE 488), 2.5 m	34031
Analog cable, parallel, 2 m	529141
Safety laboratory cable, 3 m	571817
IEC power cable 90° ➔ Page 115	

Other accessories:

Analog cable, crossover, 2 m	533039

2

3

The ultimate in power and efficiency

The SIMATIC S7-1500 controller family represents the new controller generation in the TIA portal and a milestone in automation. It delivers maximum performance and user-friendliness for medium and high-end applications in machine and plant automation.

EduTrainer® Universal with:

CPU S7-1512C-1PN
- Main memory: 250 KB for program and 1 MB for data
- Memory card included
- Interface: PROFINET IRT with 2-port switch

Inputs/outputs:
- 32 digital inputs (24 V DC)
- 32 digital outputs (24 V DC/0.5A)
- 5x analog inputs, 4x U/I, 1x R/RTD, 16-bit resolution
- 2x analog outputs, 2x U/I, 16-bit resolution

CPU S7-1516-3PN/DP
- Main memory: 1 MB for program and 5 MB for data
- Memory card included
- Interface 1: PROFINET IRT with 2-port switch
- Interface 2: Ethernet
- Interface 3: PROFIBUS, 10 ns bit performance

Inputs/outputs:
- 32 digital inputs (24 V DC)
- 32 digital outputs (24 V DC/0.5A)
- 8x analog inputs, 8x U/I/RTD/TC, 16-bit resolution
- 4x analog outputs, 4x U/I, 16-bit resolution

CPU S7-1516F-3PN/DP
- Main memory: 1.5 MB for program and 5 MB for data
- Memory card included
- Interface 1: PROFINET IRT with 2 port switch
- Interface 2: Ethernet
- Interface 3: PROFIBUS, 10 ns bit performance

Inputs/outputs:
- 32 digital inputs (24 V DC)
- 32 digital outputs (24 V DC/0.5 A)
- 8x analog inputs, 8x U/I/RTD/TC, 16-bit resolution
- 4x analog outputs, 4x U/I, 16-bit resolution

The mounting system
- EduTrainer® Universal, size 1 (W x H) 305 x 300 mm
- Can be placed on a desk or in an MPS® station
- Stable, powder-coated, sheet-steel mounting system
- Integrated power supply unit, AC 110/230 V/DC 24 V, 4 A
- 19” module 16DIN (12 HP), 16 digital inputs on 4 mm safety sockets and 16 switches/push buttons for signal simulation
- 19” module 16DOUT (12 HP), 16 digital outputs on 4 mm safety sockets
- 19” module 4AIN/2AOUT (12 HP), analog processing 4 analog inputs on 4 mm safety sockets can be switched to simulation via potentiometer and 2 analog outputs on 4 mm safety sockets
- 19” module 24 V/0 V (9 HP), 8 x 4 mm safety sockets, red for 24 V distribution, 8 x 4 mm safety sockets, blue for 0 V distribution
- 19” module simulation plate with 2x SysLink plug connector for MPS® station and control panel, each with 8 digital inputs and 8 digital outputs and 1x Sub-D 15-pin plug connector with 4 analog inputs and 2 analog outputs; emergency stop jumper to connect a safety circuit for disconnecting 8 digital outputs.

Special license rules apply for schools and educational institutes in the commercial sector.

EduTrainer® Universal Preferred versions MPS®

A4 rack with SIMATIC S7-1500

New

The ultimate in power and efficiency

The controller family SIMATIC S7-1500 is a new controller generation in the TIA portal and a milestone in automation. It delivers maximum performance and user-friendliness for medium and high-end applications in machine and plant automation.

EduTrainer® Universal with:

CPU S7-1512C-1PN (MPS)
- Main memory: 250 KB for programs and 1 MB for data
- Memory card included
- Interface: PROFINET IRT with 2-port switch

Inputs/outputs:
- 32 digital inputs (24 V DC)
- 32 digital outputs (24 V DC/0.5A)
- 5x analog inputs, 4x U/I, 1x R/RTD, 16-bit resolution
- 2x analog outputs, 2x U/I, 16-bit resolution

CPU S7-1516-3PN/DP (MPS)
- Main memory: 1 MB for program and 5 MB for data
- Memory card included
- Interface 1: PROFINET IRT with 2-port switch
- Interface 2: Ethernet
- Interface 3: PROFIBUS, 10 ns bit performance

Inputs/outputs:
- 32 digital inputs (24 V DC)
- 32 digital outputs (24 V DC/0.5A)
- 8x analog inputs, 8x U/I/RTD/TC, 16-bit resolution
- 4x analog outputs, 4x U/I, 16-bit resolution

The mounting system
- EduTrainer® Universal, size 1 (W x H) 305 x 300 mm
- Can be placed on a desk or in an MPS® station
- Stable, powder-coated, sheet-steel mounting system
- Integrated power supply unit, AC 110/230 V/DC 24 V, 4 A
- 19” module simulation plate with 2x SysLink plug connector for MPS® station and control panel, each with 8 digital inputs and 8 digital outputs and 1x Sub-D 15-pin plug connection with 4 analog inputs and 2 analog outputs; emergency stop jumper to connect a safety circuit for disconnecting 8 digital outputs.

1

1 S7-1512C-1PN (MPS)	**8065452**
2 S7-1516-3PN/DP (MPS)	**8065594**

Notes

Order no. 8065452 and 8065594 are based on Siemens SCE Trainer Packages and each one contains one EduTrainer® including programming cable (Ethernet cable) and programming software STEP 7 TIA portal. When Siemens updates these Trainer Packages, the controllers are replaced by successor models. Subject to technical implementation.

Recommended accessories:

I/O data cable with SysLink connectors (IEEE 488), 2.5 m	34031
Analog cable, parallel, 2 m	529141
Safety laboratory cable, 3 m	571817
IEC power cable 90° → Page 115	

Other accessories:

Analog cable, crossover, 2 m	533039

2

Special license rules apply for schools and educational institutes in the commercial sector.

EduTrainer® Universal Preferred versions Laboratory

A4/A4 rack with SIMATIC S7-300 and 19” simulation modules

1

1 S7-314C-2PN/DP	**8034580**
2 S7-313C-2DP (458 mm)	**567108**
3 S7-314C-2DP (458 mm)	**567109**
4 S7-315F-2PN/DP (305 mm)	**567110**

Recommended accessories:

I/O data cable with SysLink connectors (IEEE 488), 2.5 m	34031
Analog cable, parallel, 2 m	529141
Safety laboratory cable, 3 m	571817
IEC power cable 90° ➔ Page 115	
PC adapter, USB	539006
Programming software STEP 7 ➔ www.festo-didactic.com	

Other accessories:

Digital I/O module SM323 8E/8A	184550
Digital I/O module SM323 16E/16A	529142
Front-panel connector, screwed contacts	184554
Front-panel connector, screwed contacts	660560
Analog I/O module S7-SM334-4E/2A	184804
AS-Interface master upgrade S7-300 CP 343-2 AS-i Master	533028
Trainer Package Internet link S7-300, CP343-1 Advanced	533027
Analog cable, crossover, 2 m	533039

2

4

3

The industrial standard for the laboratory

The modular concept of the SIMATIC S7-300 offers professional PLC technology from the market leader, Siemens. With various CPUs, CPs and I/O modules, the S7-300 meets all automation requirements. This controller facilitates the use of a wide range of fieldbuses such as AS-interface, PROFIBUS DP and PROFINET.

The STEP 7 programming environment makes all industrially used PLC programming languages available, such as Il, LD, FBD, STEP 7-SCL, STEP 7-GRAPH and STEP 7-HiGraph.

EduTrainer® Universal with:

CPU 314C-2PN/DP
– 192 KB RAM for program and data
– Includes MMC
– Interfaces: MPI, PROFIBUS DP, PROFINET
Inputs/outputs:
– 24 digital inputs (24 V DC)
– 16 digital outputs (24 V DC, 500 mA)
– 4 analog inputs, 12 bit, 20 ms, (±10 V, 0 – 10 V, ±20 mA, 0/4 – 20 mA), 1 Pt100 input
– 2 analog outputs, (±10 V, 0 – 10 V, ±20 mA, 0/4 – 20 mA)

CPU 313C-2DP
– 128 KB RAM for program and data
– Includes MMC
– Interface: MPI, PROFIBUS DP
Inputs/outputs:
– 16 digital inputs (24 V DC)
– 16 digital outputs (24 V DC, 400 mA)
SM 334:
– 4 analog inputs, 8 bit (0–10 V, 0 – 20 mA)
– 2 analog outputs (0 – 10 V, 0 – 20 mA)

CPU 314C-2DP
– 192 KB RAM for program and data
– Includes MMC
– Interfaces: MPI, PROFIBUS DP
Inputs/outputs:
– 24 digital inputs (24 V DC)
– 16 digital outputs (24 V DC, 400 mA)
– 4 analog inputs, 11 bit, 20 ms, (±10 V, 0 – 10 V, ±20 mA, 0/4 – 20 mA), 1 Pt100 input
– 2 analog outputs, (±10 V, 0 – 10 V, ±20 mA, 0/4 – 20 mA)

CPU 315F-2PN/DP
– 192 KB RAM for program and data
– Includes MMC
– Interfaces: MPI, PROFIBUS DP, PROFINET
SM 323:
– 16 digital inputs (24 V DC)
– 16 digital outputs (24 V DC, 500 mA)
SM 334:
– 4 analog inputs, 8 bit (0 – 10 V, 0 – 20 mA)
– 2 analog outputs (0 – 10 V, 0 – 20 mA)

The holder system
– EduTrainer® A4 rack, desktop variant, size 1 or size 2, W x H 305/458 mm x 300 mm
– 19” module simulation plate with 2x SysLink plug connector for MPS® station and control panel, each with 8 digital inputs and 8 digital outputs and 1x Sub-D 15-pin plug connection with 4 analog inputs and 2 analog outputs; emergency stop jumper to connect a safety circuit for disconnecting 8 digital outputs.
– Integrated power supply unit 110/230 V/24 V, 4 A
– Stable, powder-coated, sheet-steel holder system
– 19” simulation modules: 16 DIN, 16 DOUT, 4 AIN/2 AOUT, SysLink

EduTrainer® Universal Preferred versions MPS®

A4 rack with SIMATIC S7-300

The industrial standard

The modular concept of the SIMATIC S7-300 offers professional PLC technology from the market leader, Siemens. With various CPUs, CPs and I/O modules, the S7-300 meets all automation requirements. This controller facilitates the use of a wide range of fieldbuses such as AS-interface, PROFIBUS DP and PROFINET.

The STEP 7 programming environment makes all industrially used PLC programming languages available, such as AWL, KOP, FUP, STEP 7-SCL, STEP 7-GRAPH and STEP 7-HiGraph.

EduTrainer® Universal with:

CPU 313C-2DP (MPS)
– 64 KB RAM for program and data
– Includes MMC
– Interfaces: MPI, PROFIBUS DP
Inputs/outputs:
– 16 digital inputs (24 V DC)
– 16 digital outputs (24 V DC, 400 mA)

CPU 314C-2PN/DP (MPS)
– 192 KB RAM for program and data
– Includes MMC
– Interfaces: MPI, PROFIBUS DP, PROFINET
Inputs/outputs:
– 24 digital inputs (24 V DC)
– 16 digital outputs (24 V DC, 500 mA)
– 4 analog inputs, 12 bit, 20 ms, (±10 V, 0 – 10 V, ±20 mA, 0/4 – 20 mA), 1 Pt100 input
– 2 analog outputs, (±10 V, 0 – 10 V, ±20 mA, 0/4 – 20 mA)

CPU 315F-2PN/DP (MPS)
– 256 KB RAM for program and data
– Includes MMC
– Interfaces: MPI, DP, PN
SM 323:
– 16 digital inputs (24 V DC)
– 16 digital outputs (24 V DC, 500 mA)

The holder system
– EduTrainer® A4 rack, desktop variant size 1, W x H 305 mm x 300 mm
– 19” module simulation plate with 2x SysLink plug connector for MPS® station and control panel, each with 8 digital inputs and 8 digital outputs and 1x D-sub 15-pin plug connection with 4 analog inputs and 2 analog outputs; emergency stop jumper to connect a safety circuit for disconnecting 8 digital outputs.
– Integrated 110/230 V/24 V, 4 A power supply unit
– Can be placed on the desk or in an MPS® station.
– Stable, powder-coated, sheet-steel holder system
– Can be extended with 19” simulation modules ➔ Pages 102 – 103

1

1 S7-313C-2DP (MPS)	**567103**
2 S7-314C-2PN/DP (MPS)	**8034581**
3 S7-315F-2PN/DP (MPS)	**567104**

Recommended accessories:

I/O data cable with SysLink connectors (IEEE 488), 2.5 m	34031
Analog cable, parallel, 2 m	529141
Safety laboratory cable, 3 m	571817
PC adapter, USB	539006
Programming software STEP 7 ➔ www.festo-didactic.com	
IEC power cable 90° ➔ Page 115	

Other accessories:

Digital I/O module SM323 8E/8A	184550
Digital I/O module SM323 16E/16A	529142
Front-panel connector, screwed contacts	184554
Front-panel connector, screwed contacts	660560
Analog I/O module S7-SM334-4E/2A	184804
AS-Interface master upgrade S7-300 CP 343-2 AS-i Master	533028
Trainer Package Internet link S7-300, CP343-1 Advanced	533027
Analog cable, crossover, 2 m	533039

2

3

EduTrainer® Universal Preferred version MPS®

A4 rack with Festo CECC-LK CODESYS® V3.5

New

CECC-LK (MPS)	**8043320**

Notes

The CODESYS® V3.5 programming software can be downloaded for free on the Festo website.

Recommended accessories:

I/O data cable with SysLink connectors (IEEE 488), 2.5 m	34031
Safety laboratory cable, 3 m	571817
IEC power cable 90° ➔ Page 115	

World language IEC 61131-3

The CECC controllers are the latest generation of compact controllers from Festo. A CECC controller can be programmed for IL, LD, FBD, ST, SFC and CFC with CODESYS® provided by Festo in accordance with IEC 61131-3.

EduTrainer® Universal with:

Festo CECC-LK (MPS)
Interfaces:
– 4x IO Link master
– 1x IO Link device
– Ethernet connection
– USB connection
– CANopen

Inputs/outputs:
– 12 digital inputs (24 V DC)
– 8 digital outputs (24 V DC, 500 mA)
IO-Link extension module:
– 8 digital inputs (24 V DC)
– 8 digital outputs (24 V DC, 500 mA)

CODESYS®
CODESYS® is a development environment for programmable logic controllers (PLC) in accordance with the IEC 61131-3 standard for application development in industrial automation.

The point-to-point communication of the IO-Link interface enables a simple and safe three-conductor wiring between the controller, sensors or actuators, and also makes remote parameterization possible. A wide variety of IO-Link devices are available on the market. They are mostly sensors, actuators or a combination of these as well as special IO-Link nodes to increase the number of inputs/outputs or to use standard sensors and actuators.

The mounting system
– EduTrainer® A4 rack, desktop variant, size 1, W x H 305 x 300 mm
– 19” module simulation plate with 2x SysLink plug connector for MPS® station and control panel, each with 8 digital inputs and 8 digital outputs and 1x Sub-D 15-pin plug connection with 4 analog inputs and 2 analog outputs, emergency stop jumper to connect a safety circuit for disconnecting 8 digital outputs.
– Integrated power supply unit 110/230 V/24 V, 4 A
– Can be placed on a desk or in an MPS® station.
– Stable, powder-coated, sheet-steel mounting system
– Can be extended with 19” simulation modules ➔ Pages 102 – 103

EduTrainer® Universal Preferred versions MPS®

A4 rack with Festo CPX-CEC CODESYS® V2.3/CODESYS® V3.5

World language IEC 61131-3

Benefit from automation programming in a world language, based on IEC 61131-3.

Increased performance
CPX-CEC means improved cycle times and more connectable actuators. The modular I/O system offers complete flexibility. Intelligent pneumatic and electric axes can be activated via fieldbus. The extensive CODESYS® function library provides diagnostics and condition monitoring options. Open- and closed-loop control – the solution for efficient automation of workstations or via remote control.

EduTrainer® Universal with:

CPX-CEC CODESYS® 2.3 (MPS)
– 400 MHz processor
– Data memory 32 MB flash/ 32 MB RAM
– Integrated web server
– Master CANopen fieldbus
– Communication via Ethernet (Modbus/TCP, EasyIP, TCP/IP)
– Process visualization using operator unit CDPX or OPC server
Inputs/outputs:
– 16 digital inputs (24 V DC)
– 16 digital outputs (24 V DC, 500 mA)

CPX-CEC CODESYS® 3.5 (MPS)
– 800 MHz processor
– Data memory 32 MB flash/ 256 MB RAM
– Integrated web server
– Master CANopen fieldbus
– Communication via Ethernet (Modbus/TCP, EasyIP, TCP/IP)
– Process visualization using operator unit CDPX or OPC server
Inputs/outputs:
– 16 digital inputs (24 V DC)
– 16 digital outputs (24 V DC, 500 mA)

The holder system
– EduTrainer® A4 rack, desktop variant, size 1, W x H 305 x 300 mm
– 19” module simulation plate with 2x SysLink plug connector for MPS® station and control panel, each with 8 digital inputs and 8 digital outputs and 1x Sub-D 15-pin plug connection with 4 analog inputs and 2 analog outputs; emergency stop jumper to connect a safety circuit for disconnecting 8 digital outputs.
– Integrated 110/230 V/24 V, 4 A power supply unit
– The size 1 rack can be placed on a table or in an MPS® station.
– Stable, powder-coated, sheet-steel holder system
– Can be extended with 19” simulation modules ➔ Pages 102 – 103

1

1 CPX-CEC CODESYS 2.3 (MPS)	**567274**
2 CPX-CEC CODESYS 3.5 (MPS)	**8065602**

Notes
Includes Ethernet cable for programming the CPX-CEC.
The Codesys® V2.3 and V3.5 programming software can be downloaded for free on the Festo website.

Recommended accessories:

I/O data cable with SysLink connectors (IEEE 488), 2.5 m	34031
Safety laboratory cable, 3 m	571817
IEC power cable 90° ➔ Page 115	

2

EduTrainer® Universal Preferred versions Laboratory

A4/A4 rack with Allen-Bradley CompactLogix and 19” simulation modules

1

1 AB CL 1769-L24ER-QB1B (digital)	**8022737**
2 AB CL 1769-L24ER-QBFC1B (digital/analog)	**8022848**

Recommended accessories:

I/O data cable with SysLink connectors (IEEE 488), 2.5 m	34031
Analog cable, parallel, 2 m	529141
Safety laboratory cable, 3 m	571817
IEC power cable 90° ➔ Page 115	
Programming software RSLogix	8034585

Other accessories:

Analog cable, crossover, 2 m	533039

2

The standard in North America

Allen-Bradley CompactLogix controllers of the series 1769 are ideal for small to compact control applications that do not require axis control or safety functions. These controllers offer integrated serial, EtherNet/IP™ or ControlNet™ channels and modular DeviceNet™ communications.

EduTrainer® Universal with:

AB CL 1769-L24ER-QB1B (digital)
– Main memory: 0.75 MB
– 1 GB SD memory card included
– Interfaces: 2x EtherNet/IP, 1x USB
Inputs/outputs:
– 16 digital inputs (24 V DC)
– 16 digital outputs (24 V DC/0.5 A)

AB CL 1769-L24ER-QBFC1B (digital/analog)
– Main memory: 0.75 MB
– 1 GB SD memory card included
– Interfaces: 2x EtherNet/IP, 1x USB
Inputs/outputs:
– 16 digital inputs (24 V DC)
– 16 digital outputs (24 V DC)
– 4 universal analog inputs
– 2 universal analog outputs
– 4 high-speed counters

The mounting system
– EduTrainer® Universal, size 1 (W x H) 305 x 300 mm
– Can be placed on a desk or in an MPS® station
– Stable, powder-coated, sheet-steel mounting system
– Integrated power supply unit 110/230 V/24 V, 4 A

All EduTrainer® systems include all the required equipment with simulation modules:
– 19” module 16IN (12 HP), 16 digital inputs on 4 mm safety sockets and 16 switches/pushbuttons for signal simulation
– 19” module 16OUT (12 HP), 16 digital outputs on 4 mm safety sockets
– 19” module 4AIN/2AOUT (12 HP), analog processing 4 analog inputs on 4 mm safety sockets can be switched to simulation via potentiometer and 2 analog outputs on 4 mm safety sockets (not with order no. 8022737)
– 19” module 24 V/0 V (9 HP), 8x 4 mm safety sockets, red for 24 V distribution, 8x 4 mm safety sockets, blue for 0 V distribution
– 19” module simulation plate with 2x SysLink plug connector for MPS® station and control panel, each with 8 digital inputs and 8 digital outputs and 1x Sub-D 15-pin plug connector with 4 analog inputs and 2 analog outputs; emergency stop jumper to connect a safety circuit for disconnecting 8 digital outputs

Special license rules apply for schools and educational institutes in the commercial sector.

EduTrainer® Universal Preferred version MPS®

A4 rack with Allen-Bradley CompactLogix

The standard in North America

Allen-Bradley CompactLogix controllers of the series 1769 are ideal for small to compact control applications that do not require axis control or safety functions. These controllers offer integrated serial, EtherNet/IP™ or ControlNet™ channels and modular DeviceNet™ communications.

EduTrainer® Universal with:

AB CL 1769-L24ER-QB1B (MPS)
– Main memory: 0.75 MB
– 1 GB SD memory card included
– Interfaces: 2x EtherNet/IP, 1x USB
Inputs/outputs:
– 16 digital inputs (24 V DC)
– 16 digital outputs (24 V DC/0.5A)

The mounting system
– EduTrainer® Universal, size 1 (W x H) 305 x 300 mm
– Can be placed on a desk or in an MPS® station
– Stable, powder-coated, sheet-steel mounting system
– Integrated power supply unit 110/230 V/24 V, 4 A
– 19” module simulation plate with 2x SysLink plug connector for MPS® station and control panel, each with 8 digital inputs and 8 digital outputs and 1x Sub-D 15-pin plug connection with 4 analog inputs and 2 analog outputs, emergency stop jumper to connect a safety circuit for disconnecting 8 digital outputs.

AB CL 1769-L24ER-QB1B (MPS)	**8034582**

Recommended accessories:

I/O data cable with SysLink connectors (IEEE 488), 2.5 m	34031
Safety laboratory cable, 3 m	571817
IEC power cable 90° ➔ Page 115	
Programming software RSLogix5000	8034585

Special license rules apply for schools and educational institutes in the commercial sector.

EduTrainer® Compact Preferred version
with SIMATIC S7-1512SP

New

S7-1512SP F-1 PN	**8065601**

Notes

Order no. 8065601 is based on a Siemens SCE Trainer Package and contains one EduTrainer® including programming cable and programming software Step 7 TIA-Portal. When Siemens updates these Trainer Packages, the controllers are replaced by successor models. Subject to technical implementation.

Recommended accessories:

Power supply unit for mounting frame ➔ Page 115
4 mm Safety laboratory cables ➔ Page 115
Ethernet cable ➔ Page 114

The ultimate in power and efficiency

The controller family SIMATIC S7-1500 represents the new controller generation in the TIA portal and a milestone in automation. It delivers maximum performance and user-friendliness for medium and high-end applications in machine and plant automation.

EduTrainer® Compact with:

CPU S7-1512SP
- Main memory: 300 KB for program and 1 MB for data
- Interface: PROFINET IRT with 3-port switch
- Memory card included
- Ethernet cable included
- Programming software included

Inputs/outputs:
- 16 digital inputs (24 V DC)
- 8 digital outputs (24 V DC/0.5A)

The mounting system
- EduTrainer® Compact for ER mounting frame, size 2 (W x H x D) approx. 364 x approx. 170 x approx. 80 mm
- 19” modules with 4 mm safety plug, SysLink system connector or 24 V/0 V ➔ Pages 102 – 103
- Suitable for ER mounting frame or freestanding on the table
- Lightweight injection-molded housing
- The units are supplied fully assembled
- Other combinations are possible via the online configurator

Recommended training media

WBT: PLC programming in accordance with IEC 61131 ➔ Page 19

Special license rules apply for schools and educational institutes in the commercial sector.

EduTrainer® Compact Preferred versions
with SIMATIC S7-300

SIMATIC S7 EduTrainer® Compact

The S7 EduTrainer® Compact is well equipped with the compact version of the S7-300 series. Integrated digital and analog inputs and outputs, as well as controllers with PROFIBUS-DP, are available. A wide variety of PLC programming languages such as AWL, KOP, FUP, STEP 7-SCL and STEP 7-GRAPH can be used thanks to the STEP 7 programming environment.

EduTrainer® Compact with:

CPU 312C
– 64 kB RAM for program and data
– Includes MMC
– Interface: MPI
Inputs/outputs:
– 10 digital inputs (24 V DC)
– 6 digital outputs (24 V DC, 400 mA)

CPU 313C
– 128 kB RAM for program and data
– Includes MMC
– Interface: MPI
Inputs/outputs:
– 24 digital inputs (24 V DC)
– 16 digital outputs (24 V DC, 400 mA)

CPU 313C-2DP
– 128 kB RAM for program and data
– Includes MMC
– Interface: MPI, PROFIBUS-DP
Inputs/outputs:
– 16 digital inputs (24 V DC)
– 16 digital outputs (24 V DC, 400 mA)
SM 334 (analog add-on):
– 4 analog inputs, 8 bit (0 to 10 V, 0 to 20 mA)
– 2 analog outputs (0 to 10 V, 0 to 20 mA)

CPU 314C-2PN/DP
– 192 kB RAM for program and data
– Includes MMC
– Interfaces: MPI, PROFIBUS-DP, PROFINET
Inputs/outputs:
– 24 digital inputs (24 V DC)
– 16 digital outputs (24 V DC, 500 mA)
– 4 analog inputs, 12 bit, 20 ms, (±10 V, 0 to 10 V, ±20 mA, 0/4 to 20 mA), 1 Pt100 input
– 2 analog outputs (±10 V, 0 to 10 V, ±20 mA, 0/4 to 20 mA)

The mounting system
– EduTrainer® Compact for ER mounting frame in three different sizes with height and depth of approx. 170 x 80 mm:
Width for size 1 (ER1): 242 mm
Width for size 2 (ER2): 364 mm
Width for size 3 (ER3): 486 mm
– 19” modules with 4 mm safety plug, SysLink or AS-Interface system connector ➔ Pages 102 – 103
– Suitable for ER mounting frame or unfastened on the table
– Lightweight injection moulded housing
– Expandable to some extent with 19” simulation modules
– Data buffering for S7-300 with micro memory card (included in scope of delivery)
– The units are shipped fully assembled
– S7-300 individual components upon request
– Other combinations are possible via the online configurator

Recommended training media
WBT PLC programming in accordance with IEC 61131 ➔ Page 19

1

1 S7-312C (ER2/19”DIO-SL)	**573885**
2 S7-313C (ER1/19”SL)	**573880**
3 S7-313C-2DP (ER1/19”SL)	**573881**
4 S7-313C (ER2/19”DIO-SL)	**573887**
5 S7-314C-2PN/DP (ER1/19”SL)	**576626**

Recommended accessories:

I/O data cable with SysLink connectors (IEEE 488), 2.5 m	34031
Analog cable, parallel, 2 m	529141
Power supply unit for mounting frame ➔ Page 115	
4 mm Safety laboratory cables ➔ Page 115	
PC adapter, USB	539006
Programming software STEP 7 ➔ www.festo-didactic.com	

2

3

4

5

EduTrainer® Compact Preferred versions
with SIMATIC S7-1200

1

1 S7-1214C (ER2/19"DIO-A-SL)*	**573902**
2 6x S7-1214C-TP (ER2/19"DIO-A-SL)**	**573892**
3 S7-1214C (ER2/19"DIO-A-24V/0V)*	**573901**
4 6x S7-1214C-TP (ER2/19"DIO-A-24V/0V)**	**573891**

Notes

*Order no. 573902 and 573901 contain one EduTrainer® without programming cable (Ethernet cable) or programming software. The programming software Step 7 can be ordered in different packages at www.festo-didactic.com.

**Order no. 573892 and 573891 are based on Siemens SCE Trainer Packages and contain six EduTrainers® each, including programming cable (Ethernet cable) and programming software STEP 7 Basic. When Siemens updates these Trainer Packages, the controllers are replaced by successor models. Subject to technical implementation.

Recommended accessories:

I/O data cable with SysLink connectors (IEEE 488), 2.5 m	34031
Analog cable, parallel, 2 m	529141
Power supply unit for mounting frame ➔ Page 115	
4 mm Safety laboratory cables ➔ Page 115	
Ethernet cable ➔ Page 114	
Programming software STEP 7 ➔ www.festo-didactic.com	

Bundle of 6

2

3

Bundle of 6

4

The modular mini control system from Siemens

For solutions in discrete and stand-alone automation applications in the lower performance range. The family of SIMATIC S7-1200 controllers is equipped with an integrated engineering system: SIMATIC STEP 7 Basic for controller and HMI.

EduTrainer® Compact with:

CPU S7-1214C
– 50 kB RAM, 2 MB loading buffer
– Interface: RJ45
Inputs/outputs:
– 14 digital inputs (24 V DC)
– 10 digital outputs (24 V DC, 500 mA)
– 2 analog inputs, 10 bit (0 – 10 V)

CPU module:

SB 1232 AQ analog output
– AO 1x 12 Bit (± 10 V DC, 0 – 20 mA)

The mounting system
– EduTrainer® Compact for ER mounting frame in three different sizes with height and depth of approx. 170 x 80 mm:
Width for size 1 (ER1): 242 mm
Width for size 2 (ER2): 364 mm
Width for size 3 (ER3): 486 mm
– 19" modules with 4 mm safety plug, SysLink system connector or 24 V/0 V ➔ Pages 102 – 103
– Suitable for ER mounting frame or unfastened on the table
– Lightweight injection-molded housing
– The units are shipped fully assembled.
– S7-1200 individual components upon request
– Other combinations are possible via the online configurator

Recommended training media
WBT PLC programming in accordance with IEC 61131 ➔ Page 19

** Special license rules apply for schools and educational institutes in the commercial sector.

EduTrainer® Compact Preferred versions
with LOGO! 8

LOGO! EduTrainer® Compact

Compact trainer devices that provide users with an introduction to logical signal processing within a mini control system.

Features of LOGO! modules:

LOGO! 12/24 RCE (V8)
With LOGO! 8 the successful Siemens logic module enters the next generation.
– New logic module generation
– Display with new look and feel
– Ethernet communication
– Integrated web server
– New software in new design

EduTrainer® Compact with:

LOGO! 8
– Basic functional module 12/24 RCE
  8 digital inputs
  4 relay outputs
– DM8 extension module:
  4 digital inputs
  4 relay outputs

The mounting system
– EduTrainer® Compact for ER mounting frame, size 2 (W x H x D) approx. 364 mm x approx. 170 mm x approx. 80 mm
– 19” modules with 4 mm safety plug, SysLink system connector ➔ Pages 102 – 103
– Suitable for ER mounting frame or freestanding on the table
– Lightweight injection-molded housing
– Expandable to some extent with 19” simulation modules
– The units are supplied fully assembled
– Other combinations are possible via the online configurator

1

2	1x LOGO! 8*	**8041133**
1	6x LOGO! 8 TP**	**8041132**

Notes
*Order no. 8041133 contains one EduTrainer® without programming software. The matching programming software LOGO! can be ordered separately, if necessary.
**Order no. 8041132 is based on a Siemens SCE Trainer Package and contains six EduTrainers® including programming software LOGO! Soft Comfort V8.

Recommended accessories:

Power supply unit for mounting frame ➔ Page 115	
4 mm Safety laboratory cables ➔ Page 115	
Ethernet cable ➔ Page 114	
Programming software LOGO! Soft Comfort V8	8040050

Bundle of 6

2

** Special license rules apply for schools and educational institutes in the commercial sector.

EduTrainer® Compact Preferred versions
with Festo CECC

1

1 CECC-LK	**577602**
2 CECC-D	**8024002**

Note
The free Codesys® V3.5 programming software is available for download on the Festo homepage.

Recommended accessories:

Power supply unit for mounting frame ➔ Page 115
4 mm Safety laboratory cables ➔ Page 115
Ethernet cable ➔ Page 114

2

The compact controller from Festo

The CECC controllers are the latest generation of compact controllers from Festo. A CECC controller can be programmed for IL, LDR, FCH, ST, SFC and CFC with CODESYS® provided by Festo in accordance with IEC 61131-3.

EduTrainer® Compact with:

Festo CECC-LK
Festo CECC-LK is a compact and powerful PLC. The industrial design controller has 12 digital inputs, 8 digital outputs, and 2 fast digital inputs. In addition, a wide variety of interfaces are available as standard features on board:
– 4x IO Link Master
– 1x IO Link Device
– Ethernet connection
– USB connection
– CANopen

Festo CECC-D
Festo CECC-D EduTrainer® Compact, like CECC-LK, but without IO-Link.

CODESYS®
Codesys® is a development environment for programmable logic controllers (PLC) in accordance with the IEC 61131-3 standard for application development in industrial automation.

The point-to-point communication of the IO-Link interface enables a simple and safe three-conductor wiring between the controller, sensors or actuators, and also makes remote parameterization possible. A wide variety of IO-Link devices are available on the market. They are mostly sensors, actuators or a combination of these as well as special IO-Link nodes to increase the number of inputs/outputs or to use standard sensors and actuators.

The mounting system
– EduTrainer® Compact for ER mounting frame, size 2 (W x H x D) approx. 364 mm x approx. 170 mm x approx. 80 mm
– 19” modules with 4 mm safety plug
– Suitable for ER mounting frame or freestanding on the table
– Lightweight injection-molded housing
– The unit is supplied fully assembled
– Other combinations are possible via the online configurator

Recommended training media
WBT PLC programming in accordance with IEC 61131 ➔ Page 19

CODESYS® starter kit with CECC-LK and EasyPort USB

An ideal tool for newcomers to PLC technology.

With the compact and powerful PLC CECC-LK, a 24 volt PC interface (EasyPort USB) and the necessary software and hardware.

The PLC is programmed from your PC using Codesys® provided by Festo, in accordance with IEC 61131, and information is exchanged with the visualization program via the PC interface. The visualization software provides various process models from the world of technology and everyday situations, such as level crossings, multi-storey car parks, sorting systems, washing machines, garage doors, wind generators, lifting luggage and more. A Getting Started kit is provided to explain how to use the hardware and software.

All the necessary accessories such as cables, 100 – 240 V/24 V power supply unit and screwdriver are included. All that is needed is a PC and a country-specific IEC power cable for the power supply unit (e.g. order no. 247661 for de, fr, es, etc.) – then you're off!.

System requirements
- PC with Win 2000 SP4/XP SP2/ Vista
- At least Pentium200 MHz
- 32 MB RAM
- 10 MB free space on hard disk
- CD-ROM drive
- Internet Explorer 5.0 or Netscape 4.0 or higher
- 1 free Ethernet and USB port

Order no.	**8024001**

Festo CECC CODESYS® V3 compact controller

Codesys® is a development environment for programmable logic controllers (PLC) in accordance with the IEC 61131-3 standard for application development in industrial automation. The free Codesys® programming software is available for download on the Festo homepage.

The point-to-point communication of the **IO Link interface** enables a simple and safe 3-conductor wiring between the controller, sensors or actuators, and also makes remote parameteriZation possible. There is a variety of IO-Link devices on the market. They are mostly sensors, actuators or a combination of these as well as special IO-Link nodes to increase the number of inputs/outputs or to use standard sensors and actuators.

For industrial use, quick and easy to install:

Festo CECC-LK is a compact and powerful PLC. The industrial design controller has 12 digital inputs, 8 digital outputs, and 2 fast digital inputs.

In addition, there is a wide variety of interfaces available as standard features on board:
- 4x IO-Link master
- 1x IO-Link device
- Ethernet connection
- USB connection
- CANopen

A comprehensive CODESYS® function library enables stand-alone open and closed-loop control and efficient automation of, for example, manual workstations to IEC 61131.

- Individual device or integratable via CODESYS® V3.
- Simple programming and navigation to IEC 61131-3.
- Hybrid: use CANopen Master and integrated IO-Link to directly activate electric and pneumatic drives and connect valve terminals.
- Communication: PROFINET, Ethernet IP and Modbus TCP are easy to integrate in higher-order systems

Festo CECC-D, like CECC-LK, but without IO link.

Festo CECC-LK ➔ see figure	**8023951**
Festo CECC-D	**8023952**

Recommended accessories:

I/O data cable with one SysLink connector as per IEEE 488 ...	
... and bare cable-end sleeves, 2.5 m	167122

19” simulation modules

1


2


3


4


5


6


7


8


9


10


11


12


1 **19” module 16IN (12 HP)**
16 digital inputs on 4 mm safety sockets and 16 switches/push-buttons for signal simulation.

Order no.	**567111**

2 **19” module 8IN (6 HP), without switch**
8 digital inputs on 4 mm safety sockets.

Order no.	**576620**

3 **19” module 16OUT (12 HP)**
16 digital outputs on 4 mm safety sockets.

Order no.	**567112**

4 **19” module 8IN (6 HP)**
8 digital inputs on 4 mm safety sockets and 8 switches/push-buttons for signal simulation.

Order no.	**567113**

5 **19” module 8OUT (6 HP)**
8 digital outputs on 4 mm safety sockets.

Order no.	**567114**

6 **19” module 4OUTR (6 HP)**
– 4 relay outputs at eight 4 mm safety sockets
– Maximum load: 24 V, 4.5 A

Order no.	**573278**

7 **19” module 4AIN/2AOUT (12 HP)**
– Analog value processing 4 analog inputs on 4 mm safety socket switchable to simulation via potentiometer and 2 analog outputs on 4 mm safety sockets
– Display for measured value indicator with selector switch for channel selection
– Voltage range: 0 – 10 V; -10 – +10 V

Order no.	**567119**

8 **19” module 4AIN/2AOUT (6 HP)**
– 4 analog inputs at 4 mm safety sockets
– 2 analog outputs at 4 mm safety sockets

Order no.	**574197**

9 **19” module word processing (12 HP)**
Two-line display for showing the input word and output word in HEX, DEZ and BCD. Changing of the input word via keypad.

Order no.	**567118**

10 **19” module system connector 37-pin (9 HP)**
– 1x 37-pin Sub-D connector for 16 digital inputs
– 1x 37-pin Sub-D socket for 16 digital outputs
– Emergency stop jumper for 8 digital outputs

Order no.	**567116**

11 **19” module ASI (6 HP)**
– Two 2-pin M12 sockets for pre-assembled AS-interface cables
– Integrated AS-interface filter for 24 V DC

Order no.	**567115**

12 **19” module system connector SysLink (9 HP)**
– 2x SysLink with 8 digital inputs and 8 digital outputs each
– 1x 15-pin Sub-D socket for 4 analog outputs and 2 analog inputs
– Emergency stop jumper for 8 digital outputs

Order no.	**567122**

1 **19” module 24V/0V (9 HP)**
– 8x 24 V on 4 mm safety sockets, red
– 8x 0 V on 4 mm safety sockets, blue

Order no.	**567195**

2 **19” module 24V (6 HP)**
8x 24 V on 4 mm safety sockets, red

Order no.	**567120**

3 **19” module 0V (6 HP)**
8x 0 V on 4 mm safety sockets, blue

Order no.	**567121**

4 **19” blanking plate**

42 TE	**8022733**
18 TE	**8022732**
12 TE	**567123**
9 TE	**567124**
6 TE	**567125**
3 TE	**567126**

5 **16-pin flat cable**
16-pin flat cable, open at one end to connect 19” modules with analog connection to any PLC with screw or CageClamp contacts, 500 mm long.

Order no.	**567196**

6 **10-pin flat cable**
10-pin flat cable, open at one end to connect 19” modules with digital connection to any PLC with screw or CageClamp contacts, 500 mm long.

Order no.	**567197**

1


2


3


4


5


6


EduTrainer® for mini control systems

For a basic introduction to control and monitoring tasks

New

Basic trainer for mini control systems

Mini control systems are becoming increasingly common in industry and trade. They are used for numerous small control and monitoring tasks for which a PLC would be oversized. Mini control systems or programmable control relays control and operate conveyors, monitor doors and gates, control heating, and so on.

For training purposes, they represent the link between classic safety circuits and programmable logic controllers. Functions can be implemented quickly and easily based on the learned ladder diagram or function chart methodology using simple programming software.

Mini control systems are characterized by the large number of features that they provide. They are easy to program and to connect, are flexible and low-cost, and are therefore indispensable in basic training.

Another advantage of these small and compact devices, which are suitable for mounting in 35 mm H-rails, is that they implement many functions in a single device.

Mini control systems include:
– Controllers
– Indicators
– Diagnostic tools
– Text displays with operating buttons
– Interfaces to fieldbus systems
– Web servers
– and many more.

Numerous extension modules expand the possible functions.

The **EduTrainer® for mini control systems** provides a broad basic platform for your project work. The board is designed to hold mini control systems and expansion modules, for example the Siemens LOGO! 8, the EATON Easy family or a Controllino.

Up to 12 inputs can be picked off on 4 mm safety sockets. Four of these inputs can also be connected directly on the device using a pushbutton/latched switch. Up to 8 relay outputs can be changed to digital outputs using a toggle switch. Up to 2 analog outputs can also be connected to 4 mm safety sockets.

The device also includes two controllable analog encoders, which can be used to bridge voltages from 0 to 10 V at two inputs. An RJ45 Ethernet socket can connect the controller to the programming unit or network switch.

Please request a quotation for your individual requirements.

Operation and networking in basic training

Control panels (HMI) and switches

Used in A4 frame or as a desktop device

Used with pneumatics/hydraulics on workbenches

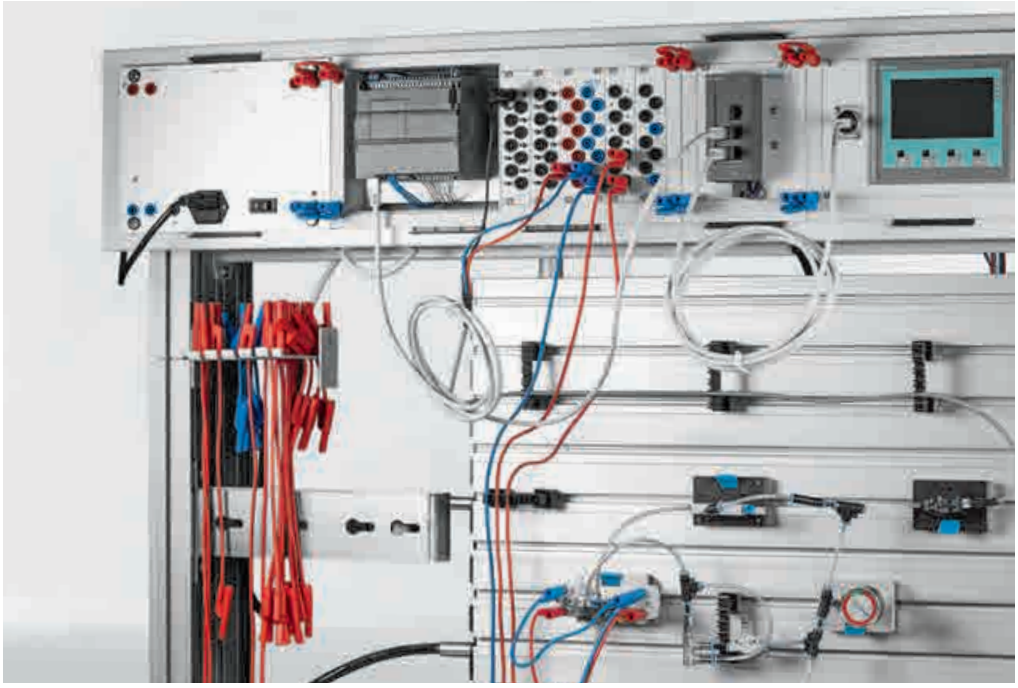

Touch panel CDPX-X-A-W-7 EduTrainer®

New

Training device for an A4 mounting frame or as a desktop device. The communication connections for 2x TCP/IP, 1x RS-232 and 2x USB are accessible at the front via sturdy plug connectors.

Festo CDPX panels are high-performance processors combined with wide-screen technology. They provide more functions at a higher resolution for man-machine interfaces.

Features of the CDPX panels:
– Open for web and multimedia applications
– Incorporation of standard documents
– Multiple interfaces for process communication
– Integrated Ethernet switch
– Programming with Designer Studio
– Supported PLC protocols: CODESY 2.3 and 3.5, Modbus TCP client, TCP server, RTU client, RTU server

Scope of delivery
Festo CDPX-X-A-W-7 touch panel set-up on an A4 board

System requirements
Windows XP/7/8/10 (32/64 bit)

Technical data
– Front panel: 266 x 297 mm
– Device depth: 90 mm
– Supply voltage: 24 V DC

Touch panel CDPX-X-A-W-7 EduTrainer	**8042283**

Recommended accessories:

4 mm Safety laboratory cables ➔ Page 115
Ethernet cable ➔ Page 114
Programming software available as download ➔ www.festo-didactic.com

Touch panel TP700 EduTrainer®

Training device for an A4 mounting frame or as a desktop device. The communication connections for 1x PROFIBUS, 2x PROFINET and 2x USB are accessible at the front via robust plug connectors.

The Touch Panel TP700 Comfort of the Siemens HMI series is a 7” touch panel for advanced applications. Comfort panel features include:
– Comprehensive high-end functionality: archive, VB scripts and various viewers for displaying system documentation (e.g. as PDF files) or in the form of Internet pages
– Multiple interfaces for process communication
– Integrated PROFINET switch from 7”
– Programming from WinCC Comfort V11 (TIA portal)

Scope of delivery
– Siemens TP700 Comfort Touch Panel set up on an A4 board
– Ethernet cable (CAT 6, crossed, 6 m)
– Engineering, options and runtime software and license for WinCC Advanced (TIA portal)

Special license rules apply for schools and educational institutes in the commercial sector.

System requirements
– 64 Bit: Windows 7 Professional, Enterprise, Ultimate SP1, Windows 8.1 Professional, Enterprise
– 32 Bit: Windows 7 Professional, Enterprise, Ultimate SP1

Technical data
– Front panel: 266 x 297 mm
– Device depth: 90 mm
– Supply voltage: 24 V DC

Touch panel TP700*	**8022729**

Recommended accessories:

4 mm Safety laboratory cables ➔ Page 115
Ethernet cable ➔ Page 114

* Special license rules apply for schools and educational institutes in the commercial sector.

Touch panel KTP700 EduTrainer®

Training device for an A4 mounting frame or as a desktop device. The communication connections for 1x PROFINET and 1x USB are accessible at the front via robust plug connectors.

The KTP700 Basic PN Touch Panel is a 7” touch panel with 8 additional, programmable, tactile function buttons and is part of the new basic Siemens HMI series for simple applications.

Features of the basic panel:
– Touch and button functionality
– Interface for connecting to various PLCs
– Archiving via USB stick
– Programming as of WinCC Basic V13 (TIA portal)

Scope of delivery
– Siemens KTP700 Basic PN Touch Panel set up on an A4 board
– Siemens Ethernet Switch Scalance XB005
– 2 Ethernet cables (CAT 6, crossed, 6 m)
– Programming software not included. It is included in the recommended accessories for the part numbers or must be ordered separately.

For schools and educational institutes in the commercial sector.

System requirements
– 64 bit: Windows 7, Windows 8 SP1
– 32 bit: Windows 7

Technical data
– Front panel: 266 x 297 mm
– Device depth: 90 mm
– Supply voltage: 24 V DC

1x Touch panel KTP700 EduTrainer*	**8022731**
6x Touch panel KTP700 EduTrainer*	**8041505**

Recommended accessories:

Trainer Package SIMATIC S7-1200 DC/DC/DC*	567238
6x S7-1200-TP (ON)*	567241
6x S7-1200-TP*	567240
4 mm Safety laboratory cables ➔ Page 115	

Ethernet switch XB005 EduTrainer®

New

Training device for an A4 mounting frame or as a desktop device. The universal Siemens Ethernet switch Scalance XB005 allows you to set up small star and linear structures and provides a simple way of showing how PLCs, touch panels (HMI) and other components are networked.

The device is used in combination with PLCs and Touch Panel EduTrainers®.

Scope of delivery
Siemens Ethernet Switch XB005 set up on an A4 board

Technical data
– Front panel: 133 x 297 mm
– Device depth: 90 mm
– Supply voltage: 24 V DC

Ethernet switch Scalance XB005	**4473300**

Available as a package: Touch panel KTP700 EduTrainer + Ethernet switch XB005 EduTrainer*

1x Touch panel KTP700 EduTrainer + 1x Ethernet switch XB005 EduTrainer*	**8062740**
6x Touch panel KTP700 EduTrainer + 6x Ethernet switch XB005 EduTrainer*	**8062741**

Touch panel PanelView Plus 7 EduTrainer®

New

Training device for an A4 mounting frame or as a desktop device. The communication connections for 1x Ethernet and 1x USB are accessible at the front via sturdy plug connectors.

The PanelView Plus 7 standard panels monitor and control devices connected to ControlLogix controllers in an Ethernet/IP network.

Features of the PanelView Plus 7 standard panels:
– Ethernet communication that supports networks with linear and star topologies.
– PDF display functions for accessing PDF files stored on the terminal.
– Programming with FactoryTalk View

Scope of delivery
Allen-Bradley Touch Panel PanelView didactically set up on an A4 board

System requirements
– Windows XP Professional SP3 32 bit
– Windows 7 SP1 Enterprise, Ultimate Edition
– Windows 8 Professional, Enterprise Edition 32 bit, 64 bit

Technical data
– Front panel: 266 x 297 mm
– Device depth: 90 mm
– Supply voltage: 24 V DC

Touch panel panelView Plus 7 EduTrainer	**5007887**

Recommended accessories:

EduTrainer Universal with Allen-Bradley controllers ➔ Pages 94 – 95	
4 mm Safety laboratory cables ➔ Page 115	
Ethernet cable ➔ Page 114	
Programming software	On request

Ethernet switch US5T EduTrainer®

New

Training device for an A4 mounting frame or as a desktop device. The universal Allen-Bradley Ethernet switch US5T allows you to set up small network structures and provides a simply way of showing how PLCs, touch panels (HMI) and other components are networked.

The device can be used in combination with PLCs and Touch Panel EduTrainers®.

Scope of delivery
Allen-Bradley Ethernet Switch US5T set up on an A4 board

Technical data
– Front panel: 133 x 297 mm
– Device depth: 90 mm
– Supply voltage: 24 V DC

Ethernet switch US5T EduTrainer	**4994634**

Touch panel KTP400 EduTrainer® Compact

New

Training device for an ER mounting frame (pneumatics/hydraulics). The communication connections for 1x PROFINET and 1x USB are accessible at the front via sturdy plug connectors.

The Touch Panel KTP400 Basic PN is a 4" touch panel with 4 additional, programmable, tactile function buttons and is part of the new basic Siemens HMI series for simple applications.

Features of the basic panel:
– Touch and button functionality
– Interface for connecting to various PLCs
– Archiving via USB stick
– Programming as of WinCC Basic V13 (TIA portal)

Scope of delivery
– Siemens Touch Panel KTP400 Basic PN didactically set up on a mounting frame housing
– Siemens Ethernet switch Scalance XB005 is supplied (not set up on a housing for an ER mounting frame)
– 2 Ethernet cables (CAT 6, crossed, 6 m)
– Programming software SIMATIC WinCC Basic

For schools and educational institutes in the commercial sector.

System requirements
– 64-bit: Windows 7, Windows 8 SP1
– 32-bit: Windows 7

Technical data
– Height x depth: approx. 170 x approx. 80 mm
– Device width: 245 mm
– Supply voltage: 24 V DC

Touch panel KTP400 EduTrainer Compact*	**8041758**

Recommended accessories:

EduTrainer Compact with Siemens controllers ➔ Pages 96 – 99	
4 mm Safety laboratory cables ➔ Page 115	

Ethernet switch XB005 EduTrainer® Compact

Training device for an ER mounting frame (pneumatics/hydraulics). The universal Ethernet switch Siemens Scalance XB005 allows you to set up small star and linear structures and provides a simple way of showing how PLCs, touch panels (HMI) and other components are networked.

The device is used in combination with PLCs and Touch Panel EduTrainers®.

Scope of delivery
– Scalance XB005 switch, set up on a mounting frame housing

Technical data
– Height x depth: approx. 170 x approx. 80 mm
– Device width: 123 mm
– Supply voltage: 24 V DC

Ethernet switch XB005 EduTrainer Compact	**8041755**

Available as a package: Touch panel KTP400 EduTrainer Compact + Ethernet switch XB005 EduTrainer Compact*

1x Touch panel KTP400 EduTrainer Compact + 1x Ethernet switch XB005 EduTrainer Compact*	**8022734**
6x Touch panel KTP400 EduTrainer Compact + 6x Ethernet switch XB005 EduTrainer Compact*	**8022735**

Equipment set TP 301
Basic PLC programming

1

2

3

4

5

6

7

8

9

10

11

12

13


Complete equipment set TP 301	**167101**

The most important components at a glance:

1	1x	Signal input, electrical	162242
2	1x	Indicator unit and distributor, electrical	162244
3	1x	Proximity sensor, inductive, M12	548643
4	1x	Proximity sensor, capacitive, M12	548651
5	1x	Proximity sensor, optical, M12	572744
6	4x	Proximity sensor, electronic, with cylinder mounting	2344752
7	1x	5/2-way solenoid valve with LED	567199
8	1x	5/2-way double solenoid valve with LED	567200
9	1x	Single-acting cylinder	152887
10	2x	Double-acting cylinder	152888
11	1x	Start-up valve with filter control valve	540691
12	1x	Manifold	152896
13	2x	Plastic tubing, 4x 0.75 silver 10 m	151496

Recommended accessories:

Aluminum profile plate ➔ Page 112	
Universal connection unit, digital (SysLink)	162231
Power supply unit for mounting frame ➔ Page 115	
4 mm Safety laboratory cables ➔ Page 115	
EduTrainer ➔ Pages 87 – 100	

Supplementary equipment set from TP 201 to TP 301

Supplements the Electropneumatics basic level equipment set, TP 201, to form a complete Programmable Logic Controllers equipment set, TP 301.

Complete supplementary equipment set TP 201 – TP 301	**167102**

The most important components at a glance:

3	1x	Proximity sensor, inductive, M12	548643
4	1x	Proximity sensor, capacitive, M12	548651
6	2x	Proximity sensor, electronic, with cylinder mounting	2344752

Training aims
- Benefits of the PLC compared to conventional solutions, such as electrical, electropneumatic or electrohydraulic solutions
- Functions of system components of a PLC
- Commissioning a PLC
- Application criteria for mechanical, optical, capacitive and inductive proximity sensors
- Sequence control and parallel logic
- Systematic programming of a PLC in accordance with international standard IEC 1131-3
- IEC 1131-3 programming languages: Function Block Diagram, Ladder Diagram, Statement List, Structured Text and Sequence Language

A PLC (SIMATIC S7-300 or Allen Bradley) is required to carry out the tasks. Connection with universal connection unit and I/O data cable (SysLink) or with 4 mm safety connectors. I/O modules can be connected via 4 mm safety connectors.

Also order:

Workbook Programmable Logic Controllers, Basic level
Campus license (➔ Page 55):

de	**93313**
en	**93314**
es	**94427**

Recommended training media
Textbook Programmable Logic Controllers, Basic level

Interfaces to the process

With an EduTrainer® or any PLC, you can control the process of your choice. The programmer (PC), controller and processes are connected via various interfaces	**1. Simulation of the PLC inputs and display of the PLC outputs** Testing a PLC program using the simulation box	**2. Control of virtual processes** Industry-oriented, cost-effective PLC training by means of simulation software, e.g. CIROS®	**3. Process model: Control of actual modules** Using equipment sets and MPS® stations
EduTrainer® or PLC of your choice			
I/O Data cable I/O data cable with SysLink connectors for EduTrainer® at both ends (order no. 034031/167197) or with SysLink connectors at one end and open cable end sleeves for any PLC (order no. 167122)			
Interface EasyPort USB (order no. 548687)			
Cable set with safety plugs (order no. 167091)			
Process model – Digital simulation box (order no. 170643) or simulation box digital/analog (order no. 526863) – Simulation software CIROS® FluidSIM® EasyVeep – Equipment sets and MPS® stations – Connected Learning Tec2Screen®			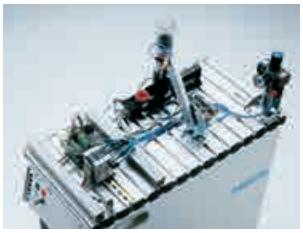

Accessories and optional components

1

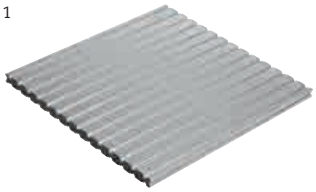

2

3

4

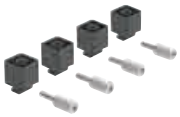

5

6

1 **Aluminum profile plate**
The anodized aluminum profile plate forms the basis for all training packages. All of the components fit securely and safely into the grooves on the profile plate. There are grooves on each side and, if required, both sides can be fitted with components. The grooves are compatible with the ITEM profile system. Grid dimensions: 50 mm.

For installation on tables we recommend the appropriate rubber feet (order no. 158343).

Sizes 350 x 1100 mm and 350 x 250 mm supplied without side caps (H x W).

350 x 250 mm	**159333**
350 x 1100 mm	**162360**
700 x 350 mm	**162386**
700 x 350 mm*	**170395**
700 x 550 mm	**159409**
700 x 700 mm	**159410**
700 x 1100 mm	**159411**

* with cable guide

2 **Slotted mounting plate**
All components with the Quick-Fix mounting system can be mounted on slotted mounting plates. The slotted mounting plates are fitted with elastic buffers and can be used horizontally on a table top. Order no. 159331 can also be inserted in conventional A4 mounting frames. The slotted mounting plates are not intended for use with actuators.

694 x 297 mm	**159331**
700 x 550 mm	**544246**

(overall external dimensions H x W)

3 **Rubber feet**
For non-slip, protective mounting of profile plates on tabletops of any type. Set (4 pieces).

Order no.	**158343**

4 **Plug-in adapter set**
The plug-in adapter set can be used to mount the ER units directly on the blue plug-in board or on the aluminum profile plate. One set is required to mount one unit.

Order no.	**541122**

5 **A4 ER mounting frame**
The ER mounting plate can be installed in any A4 mounting frame. A cut-out permits installation of 2 large or 4 small Festo Didactic ER units (H x W).

297 x 500 mm	**536200**

6 **Digital caliper**
– Measuring range: 0 – 150 mm
– Resolution: 0.01 mm
– Display: LCD display, 5-digit
– Power supply: 1.5 V button cell

Order no.	**35653**

1 **Simulation box, digital**
The simulation box is used to display the input and outputs signals of an MPS® station or PLC. Two modes of application are possible:
– Simulation of inputs for testing of a PLC program. Use I/O data cable (SysLink) (order no. 034031) for this purpose
– Setting of outputs (with separate 24 V supply) in order to operate an MPS® station. The cable (order no. 167106, 2.5 m) required for this purpose is included in the scope of delivery.

The simulation box contains a SysLink socket.

Order no.	**170643**

2 **Simulation box, digital/analog**
The digital/analog simulation box additionally allows the simulation and display of analog signals (0 – 10 V). The simulation box is supplied without connection cables.

The following connection cables are recommended for flexible application:
– I/O data cable, parallel: Order no. 034031 (e.g. SimuBox with SPS EduTrainer® or EasyPort)
– Analog cable, parallel: Order no. 529141 (e.g. SimuBox with EasyPort)
– Analog cable, crossover: Order no. 533039 (e.g. SimuBox with MPS® Analog-Terminal)
– I/O data cable, crossover: Order no. 167197

Order no.	**526863**

3 **Connection unit, analog**
– Permissible voltage range: 22 – 27 V DC
– Reference: GND
– 4 analog voltage inputs: Range: -10 V – +10 V (max. 30 V), input resistance: 200 kΩ
– 4 analog current inputs: Range: 0 – 20 mA (max. -4 – +24 mA), input voltage: max. ±30 V
– 2 analog outputs: Voltage: -10 – +10 V, short-circuit-proof, max. ±30 V, fuse-protected, current: max. 20 mA

Using an analog cable (order no. 529141), the unit can also be used as an analog connection unit for the EduTrainer® PLC or EasyPort USB.

Order no.	**567232**

4 **Universal connection unit, digital (SysLink)**
The universal connection unit connects all 4 mm safety plugs with the 24-pin system connector as per IEEE 488 (SysLink). It thus becomes a universal interface between units with 4 mm connection technology and devices equipped with SysLink connectors as per IEEE 488:
– Connection to an I/O terminal of an MPS® station via an I/O cable with SysLink connectors at both ends, order no. 034031
– I/O coupling via the 4 mm laboratory connectors of a PLC using an open I/O cable (IEEE 488 connector – bare wires), order no. 167122
– Simple connection of actuators and sensors via 4 mm laboratory connectors with the EasyPort interface unit for FluidSIM®

Inputs:
3 safety sockets each for 8 three-wire sensors
Outputs:
2 safety sockets each for 8 actuators
Connections:
4 mm safety sockets for 24 V DC, SysLink connector (IEEE 488)
I/O status display: Via LED

Order no.	**162231**

5 **Sensor tester**
The sensor tester speeds up commissioning of systems with integrated sensors and proximity sensors. It can be used for:
– Quick and simple checking of contacts
– Rapid fine adjustment
– Unambiguous detection of switch outputs

Order no.	**158481**

6 **AS-Interface addressing device**
Addressing device with LCD display for determining slave addresses and re-addressing slaves.

Order no.	**18959**

AS-Interface addressing cable
Addressing cable for connecting various slaves to the addressing device.

Order no.	**18960**

7 **BNI IOL network interface with 8 programmable inputs/outputs**
For use as a decentralized module for connecting standard binary sensors and controlling actuators. An IO-Link device communicates with the IO-Link master module via the IO-Link protocol.

Order no.	**8024926**

8 **BNI IOL network interface with 16 programmable inputs/outputs**
For use as a decentralized module for connecting standard binary sensors and controlling actuators. An IO-Link device communicates with the IO-Link master module via the IO-Link protocol.

Order no.	**8024927**

1

2

3

4

5

6

7

8


Accessories and optional components

1


2


3


4


5


6


7


8


9


10


11


12


1 **I/O data cable with SysLink connectors (IEEE 488)**
For connection of SysLink interfaces, for example an EduTrainer® PLC, with the universal connection unit, digital (Order no. 162231).

2.5 m	**34031**

2 **I/O data cable with one SysLink connector as per IEEE 488 and bare cable-end sleeves**
For connecting EasyPort to the I/O terminals of a PLC.

2.5 m	**167122**

3 **I/O data cable, crossover, with terminal socket**
Connects the EduTrainer® Universal of an MPS® station with EasyPort, order no. 548687. Adapter cable for the connection: any PLC with an open I/O data cable, order no. 167122, and universal connection unit, order no. 162231.

0.3 m	**167197**

4 **PC data cable RS232**
For connection of the interface configuration box (EasyPort) to the RS232-interface of the PC.

female – female, 1.5 m	**160786**
male – female, 1.5 m	**162305**

5 **Analog cable, parallel**
EasyPort/PLC connection for a real process or a simulation box.

2 m	**529141**

6 **Analog cable, crossover**
EasyPort with actual PLC and/or simulation box.

2 m	**533039**

7 **PC adapter**
Cable for the SIMATIC S7 with a USB port for Win XP/Vista/7 with 32/64 bit.

USB	**539006**

8/9 **PROFIBUS cable**
Connection between 2 PROFIBUS stations.

8 0.5 m	**533035**
9 2.0 m	**533036**

10 **Ethernet cable**
RJ45, CAT5

0.5 m	**8062902**
1 m	**8062903**
1.5 m	**8062904**
2 m	**567280**

11 **Safety laboratory cable, 3 m**
For connecting an EduTrainer® Universal without a power supply unit to an external 24 V power supply unit. 3 m long, 3 x 4 mm safety plugs (blue, red, green/yellow).

Order no.	**571817**

12 **Plug-in adapter, electrical**
Adapter for inserting cables with safety plugs into sockets without shock-hazard protection. This is no longer compliant with DIN EN 61010 (IEC 1010). Set of 10 adapters.

Order no.	**185692**

Connecting cable for solenoid valves with M8 central plug
Connecting cable (4-pin plug) for connecting solenoid valves with an M8 central plug.
– Cable length 2.5 m with open ends
– Cable length 1 m with 4 mm safety plugs and solenoid coil numbering

2.5 m with open ends

Order no.	**158962**

1 m with safety plugs

Order no.	**540703**

Components for S7-300: Front-panel connector

Screwed contacts, 20-pin

Order no.	**184554**

Screwed contacts, 40-pin

Order no.	**660560**

Flat/round cable connector, 20-pin

Order no.	**533663**

Flat/round cable connector, 40-pin

Order no.	**533662**

Micro Memory Card
For CPU 313C, 313C-2DP, 314C-2DP, ET 200S with IM151/CPU. RAM: 64/512 KByte.

64 kByte	**533030**
512 kByte	**536740**

1 **Power supply unit for mounting frame**
- Input voltage: 85 – 265 V AC (47 – 63 Hz)
- Output voltage: 24 V DC, short-circuit-proof
- Output current: max. 4 A
- Dimensions: 170 x 240 x 92 mm

Without power cable

Order no.	**8049382**

Connector as per CEE 7/VII for DE, FR, NO, SE, FI, PT, ES, AT, NL, BE, GR, TR, IT, DK, IR, ID

Order no.	**159396**

Connector as per NEMA 5-15 for US, CA, Central America, BR, CO, EC, KR, TW, TH, PH, JP

Order no.	**162411**

Connector as per BS 1363 for GB, IE, MY, SG, UA, HK, AE

Order no.	**162412**

Connector as per AS 3112 for AU, NZ, CN, AR

Order no.	**162413**

Connector as per SEV 1011 for CH

Order no.	**162414**

Connector as per SANS 164-1 for ZA, IN, PT, SG, HK, (GB), (AE)

Order no.	**162415**

2 **IEC power cable 90°**
One end fitted with a 90° IEC connector and the other fitted with a country-specific connector. Preferred version for EduTrainer® Universal.

Connector as per CEE 7/VII for DE, FR, NO, SE, FI, PT, ES, AT, NL, BE, GR, TR, IT, DK, IR, ID

Order no.	**549860**

Connector as per NEMA 5-15 for US, CA, Central America, BR, CO, EC, KR, TW, TH, PH, JP

Order no.	**549861**

Connector as per BS 1363 for GB, IE, MY, SG, UA, HK, AE

Order no.	**549862**

Connector as per AS 3112 for AU, NZ, CN, AR

Order no.	**549863**

Connector as per SEV 1011 for CH

Order no.	**549864**

Connector as per SANS 164-1 for ZA, IN, PT, SG, HK, (GB), (AE)

Order no.	**549865**

3 **4 mm Safety laboratory cables**
- Plugs with rigid protective sleeve and axial socket
- Conductor cross section: 1 mm²
- 1000 V CAT II
- Power rating: 16 A

4 mm Safety laboratory cables, **50 mm**

red	**376932**
blue	**376931**
black	**572102**

4 mm Safety laboratory cables, **300 mm**

red	**376935**
blue	**376934**
black	**572104**
green-yellow	**572107**

4 mm Safety laboratory cables, **500 mm**

red	**376937**
blue	**376936**
black	**572108**
green-yellow	**572111**

4 mm Safety laboratory cables, **1000 mm**

red	**376939**
blue	**376938**
black	**572112**
green-yellow	**572115**

4 mm Safety laboratory cables, **1500 mm**

red	**376941**
blue	**376940**
black	**572116**
green-yellow	**572119**

1

3

2

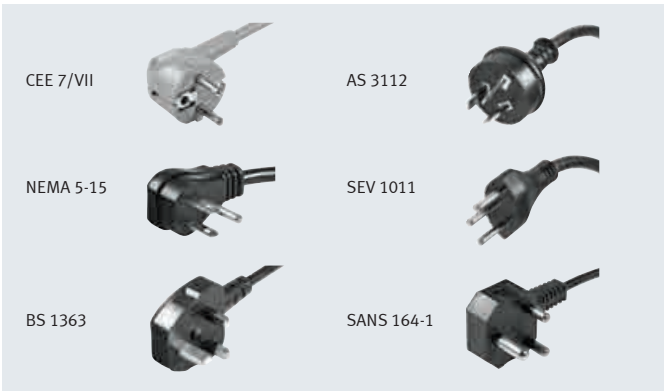

PLC Applications – LabVolt Series

Control systems replicating real technological applications

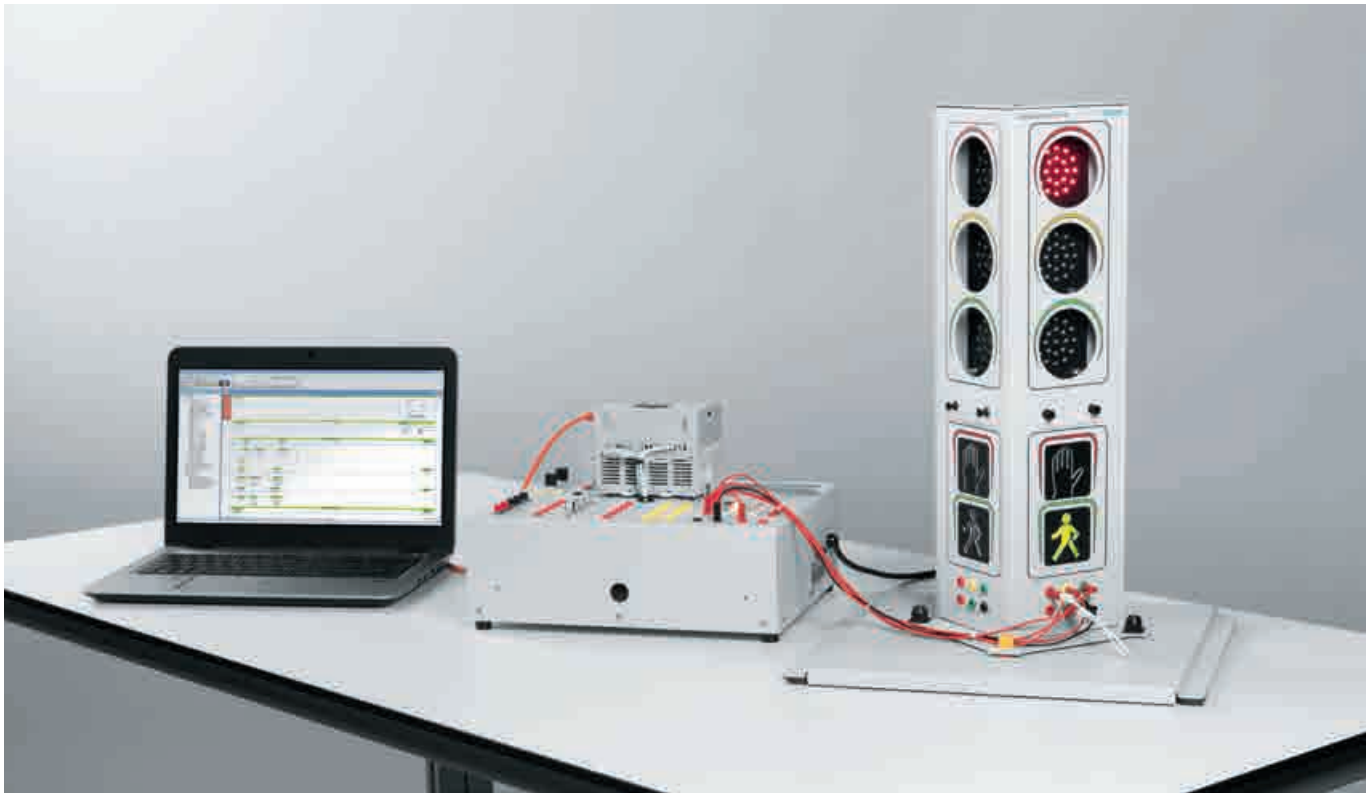

Understand PLC principles and concepts
The PLC Applications from the LabVolt Series aim to further develop student understanding of PLC programming. Basic principles are integrated with more advanced concepts in order to design small-scale systems typical of what can be found in the industry.

Main features
- Tabletop systems
- Cost-effective applications
- Realistic components and applications
- Can be interconnected with other training systems for interdisciplinary training applications
- Modular systems – accessories available to make the applications more complex
- Fault-insertion capabilities
- Comprehensive curriculum included with each application
- PLC sold separately (users can purchase one of the recommended PLCs or use their own)

Detailed courseware
Each application comes with a student manual and an instructor guide. The student manuals are divided into job sheets detailing relevant information and providing clearly stated objectives and procedure steps. The instructor guides contain ladder programs and answer keys for all exercises and questions in the student manuals.

Troubleshooting skills
The training capabilities of the systems are enhanced by their modularity and by the ability to use instructor-inserted faults. Fault switches enhance troubleshooting activities by simulating open coils and contacts, defective contacts, shorted connections, and crossed wires.

Topic coverage
Each PLC application covers a specific topic related to PLC controls. Through practical examples, students gain a strong knowledge of PLCs and of the studied applications.
- Traffic Lights
- Electro-Pneumatics
- Electro-Mechanical – DC or stepper motor
- Wind Turbine
- Level Process Control
- Bottling Process

Traffic Light Training System

This System is a classic PLC system allowing the implementation of vehicle and pedestrian traffic control at an intersection.

Features
– N-S/E-W traffic control with pedestrian crossing
– Another unit can be added to create a full, four-direction traffic light
– Flow management with proximity detectors (optional)
– Traffic light synchronization

PLC requirements
– 3x 24 V DC inputs
– 10x 24 V DC outputs

Recommended PLC
– AB MicroLogix 1200
– Siemens ET200S IM151-8

Traffic Light Training System	en	es
Order no.	**582532**	**582833**

Note: This product is currently not fully compliant with EU directives.

Recommended accessories:

Push Buttons and Lights	582166

Electro-pneumatic Training System

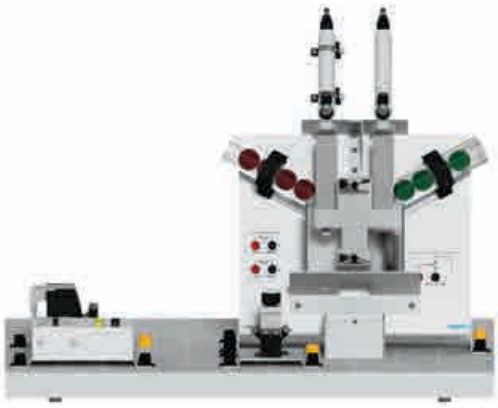

This System uses a modular design approach to study the control of an electric, residential forced-air system.

Features
– Two double-acting cylinders
– Two reed switches and one mechanical limit switch for PLC feedback
– Control valve station featuring single- and double-solenoid valves
– Applications: stamping, hold and punch, filling process, etc.

PLC requirements
– 5x 24 V DC inputs
– 4x 24 V DC outputs

Recommended PLC
– AB MicroLogix 1100
– AB MicroLogix 1200
– Siemens ET200S IM151-8

Electro-pneumatic Training System	en	es
Order no.	**588682**	**588683**

Note: This product is currently not fully compliant with EU directives.

Additional required accessories:

Air Compressor	588108
Conditioning Unit (single port)	588111

Recommended accessories:

Push Buttons and Lights	582166
Toggle Switches and Lights	582167
Rotary Switches	582168
Emergency Switch	582169
Wiring Module	582170
Signal Tower	582351

More information about the recommended PLCs:
➔ Pages 122 – 125

Electro-mechanical Training System

This System enables diverse PLC controlled positioning and motion processes. Available with a DC or stepper motor.

Features
- Industrial 1800 r/min, 90 V DC motor or high-torque stepper motor
- Two magnetic limit switches for PLC feedback
- Perforated base to accommodate optional sensors
- 100 ppr optical encoder required for the stepper motor, optional for the DC motor

PLC requirements
System with the stepper motor:
- 5x 24 V DC inputs
- 3x 24 V DC outputs

System with the DC motor:
- 8x 24 V DC inputs
- 2x 0 –10 V DC/4 – 20 mA input (for the optional exercise only)
- 3x 24 V DC outputs

Recommended PLC
- AB MicroLogix 1100
- AB MicroLogix 1200
- Siemens ET200S IM151-8

System with the stepper motor		
120 V, 60 Hz	**en**	**es**
Order no.	**582538**	
220 V, 50 Hz		
Order no.	**582539**	**582540**
240 V, 50 Hz		
Order no.	**582541**	
System with the DC motor		
120 V, 60 Hz		
Order no.	**582534**	
220 V, 50 Hz		
Order no.	**582535**	**582536**
240 V, 50 Hz		
Order no.	**582537**	

Note: This product is currently not fully compliant with EU directives.

Additional required accessories:	
Optical encoder (for the DC motor only)	582178
Recommended accessories:	
Push Buttons and Lights	582166
Toggle Switches and Lights	582167
Rotary Switches	582168
Emergency Switch	582169
Wiring Module	582170
Optical encoder (Stepper motor only)	582178
Signal Tower	582351

Wind Turbine Training System

This System uses a PLC to monitor the speed and direction of the wind and control the position of the wind turbine nacelle.

Features
- System comprised of a nacelle simulator and a wind generator
- Nacelle equipped with DC motor and mechanical clutch
- Two limit switches with NO and NC contacts
- Analog position sensor for determining wind direction
- Variable-frequency pulse-train signal for measuring wind speed

PLC requirements
- 6x 24 V DC inputs
- 1x 0 –10 V DC/4 – 20 mA input
- 2x 24 V DC outputs

Recommended PLC
- AB MicroLogix 1100
- AB MicroLogix 1200
- Siemens ET200S IM151-8

The Analog I/O Expansion Kit corresponding to the selected PLC is required to perform all the exercises.

Wind Turbine Training System	**en**	**es**
Order no.	**582542**	**582543**

Note: This product is currently not fully compliant with EU directives.

Recommended accessories:	
Push Buttons and Lights	582166
Wiring module	582170

More information about the recommended PLCs:
➔ Pages 122 – 125

Level Process Training System

This System introduces level control using a PLC, control relays, a pump, and a set of sensors.

Features
– Submersible variable speed pump
– Level process column
– Float switch
– Capacitive and magnetic level switches
– Solenoid and manual valves
– Optional analog level sensor
– Self-regulating process allows a variety of PLC control schemes

PLC requirements
– 6x 24 V DC inputs
– 1x 0 –10 V DC/4 – 20 mA input (for the optional exercise only)
– 6x 24 V DC outputs
– 1x 0 – 10 V DC/4 – 20 mA output (for the optional exercise only)

Recommended PLC
– AB MicroLogix 1100
– AB MicroLogix 1200
– Siemens ET200S IM151-8

The Analog I/O Expansion Kit corresponding to the selected PLC is required to perform all the exercises.

Level Process Training System

120 V, 60 Hz	**en**	**es**
Order no.	**582544**	
220 V, 50 Hz		
Order no.	**582545**	**582546**
240 V, 50 Hz		
Order no.	**582547**	

Note: This product is currently not fully compliant with EU directives.

Additional required accessories:	
Level Sensor	582180
Recommended accessories:	
Push Buttons and Lights	582166
Toggle Switches and Lights	582167
Rotary Switches	582168
Emergency Switch	582169
Wiring Module	582170
Signal Tower	582351

More information about the recommended PLCs:
➔ Pages Pages 122 – 125

Bottling Process Training System

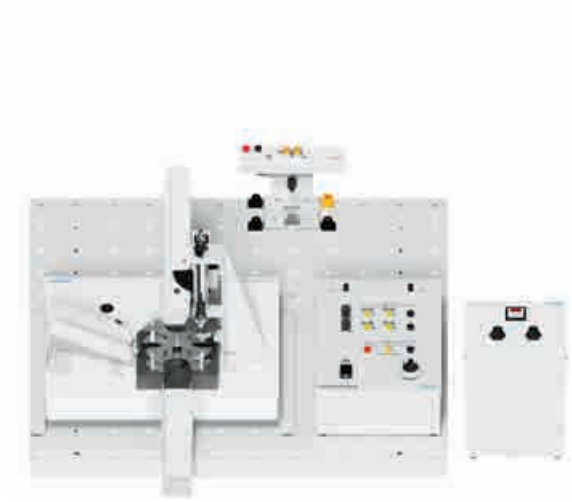

This System is a small-scale reproduction of a widespread industrial process that combines pneumatics, motion control, and PLC sequencing.

Features
– Film canister capping process
– Two high-torque stepper motors
– Dual stepper motor drive
– Inductive proximity switch
– Mechanical switch
– Single solenoid directional valve
– Double-acting cylinder
– DC power supply

PLC requirements
– 5x 24 V DC inputs
– 6x 24 V DC outputs
– 2x 24 V DC high-speed outputs (for the optional exercise only)

Recommended PLC
– AB MicroLogix 1100

Bottling Process Training System

120 V, 60 Hz	**en**	**es**
Order no.	**588684**	
220 V, 50 Hz		
Order no.	**588685**	**588686**

Note: This product is currently not fully compliant with EU directives.

Additional required accessories:	
Air Compressor	588108
Conditioning Unit (single port)	588111
Recommended accessories:	
Push Buttons and Lights	582166
Toggle Switches and Lights	582167
Rotary Switches	582168
Emergency Switch	582169
Wiring Module	582170
Signal Tower	582351

Accessories

1

2

3

4

5

1 **Push Buttons and Lights**
Features two NO and one NC momentary push buttons, as well as three LED indicator lights. The module can be used to implement a Start/Pause/Stop station with indicator lights.

Order no.	**582166**

Note: This product is currently not fully compliant with EU directives.

2 **Toggle Switch and Lights**
Features three toggle switches and three LED Indicator Lights.

Order no.	**582167**

Note: This product is currently not fully compliant with EU directives.

3 **Rotary Switch**
Features two three-position, dual-pole switches with NO contacts.

Order no.	**582168**

Note: This product is currently not fully compliant with EU directives.

4 **Emergency Switch**
Introduces students to safety standards and provides a readily available way to promptly terminate a problematic process. This model features one emergency switch with two sets of NO contacts (one for low voltage and the other for line voltage).

Order no.	**582169**

Note: This product is currently not fully compliant with EU directives.

5 **Wiring Module**
This module uses 2 mm leads and jacks for easy interfacing between PLCs and PLC applications. The module can also be used to practice wiring skills using the terminal blocks.

Order no.	**582170**

Note: This product is currently not fully compliant with EU directives.

1 **Signal Tower**
The signal power provides visual signals of the FMS states. Lights are stacked one upon another. Each module is easily programmable without any special wiring or tools. Acoustic alarm available as an option.

Signal tower	**582351**
Acoustic alarm	**779418**

Note: This product is currently not fully compliant with EU directives.

2 **Level Sensor**
This sensor provides a signal proportional to the position of its floating device. It is specially designed for the Level process Training System.

Order no.	**582180**

Note: This product is currently not fully compliant with EU directives.

3 **Optical Encoder**
The Optical Encoder is an add-on that provides position feedback signals (100 ppr) compatible with the 24 V DC inputs of PLCs. Specially designed for use with the Electromechanical Training system with the stepper motor.

Order no.	**582178**

Note: This product is currently not fully compliant with EU directives.

4 **Power Supply 24 DC**
The DC Power Supply converts the AC line voltage into a 24 V DC voltage. It is protected against short circuits by an automatic current/limit circuit.

120 V, 60 Hz

Order no.	**587962**

220 V, 50 Hz

Order no.	**587963**

240 V, 50 Hz

Order no.	**587961**

Note: This product is currently not fully compliant with EU directives.

1


4


2


3


PLC Training Systems – LabVolt Series

Operating, programming and troubleshooting PLCs

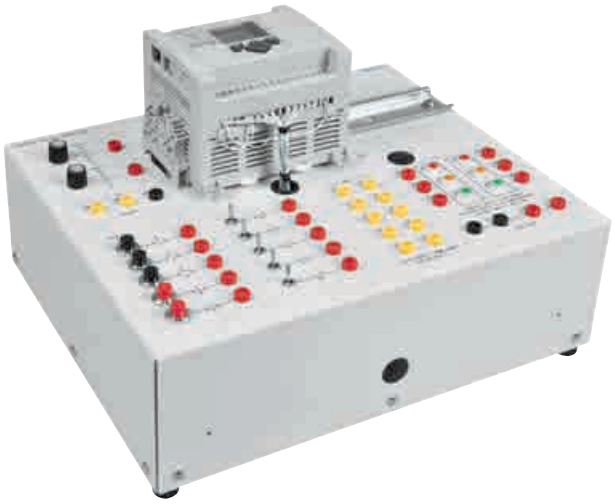

PLC Allen-Bradley MicroLogix 1100

Features
- Digital and analog I/Os: 10x 24 V DC digital inputs, 6x 24 V DC digital outputs, 2x analog inputs (0 – 10 V DC)
- Built-in 10/100 Mbps Ethernet/IP port for peer-to-peer messaging and programming
- Eight fault switches
- Online editing, embedded Web server, and LCD screen
- Five push-buttons, five toggle switches
- PID Capability
- Onboard traffic light simulator
- Easy expansion using rackless I/O modules
- Compatibility with MicroLogix and SLC instruction set
- Includes curriculum

120 V, 60 Hz	**en**	**es**	**fr**
Order no.	**587530**	**587532**	**587531**
220 V, 50 Hz			
Order no.	**587533**	**588991**	
240 V, 50 Hz			
Order no.	**587529**		

Note: This product is currently not fully compliant with EU directives.

Additional required accessories:	
RSLogix Micro programming software	587552
Optional accessories:	
Analog I/O expansion kit	587547

PLC Siemens ET200S IM151-8

Features
- Digital I/Os: 8x 24 V DC inputs and 12x 24 V DC outputs
- 24 V DC built-in power supply
- 8x fault switches
- 4x push-buttons, 4x toggle switches
- Easy expansion using rackless I/O modules (Analog Expansion Module, Model 3244-B)
- Based on SIEMENS S7-300 technology (IM151-8 CPU)
- PID Capability
- Requires Step 7 programming software
- For programming, an Ethernet cable is included
- Includes SIEMENS resource curriculum CD-ROM (no Festo Didactic curriculum included)

120 V, 60 Hz	**en**
Order no.	**587534**
220 V, 50 Hz	
Order no.	**588461**

Note: This product is currently not fully compliant with EU directives.

Additional required accessories:	
PLC Software (TIA Portal) 1 User	587904
Optional accessories:	
Analog I/O expansion kit	587548

PLC Siemens ET200S IM151-8 with case

Features
- Rugged suitcase for easy transportation and storage
- Includes storage compartment for cables and accessories
- Digital I/Os: 8x 24 V DC inputs and 12x 24 V DC outputs
- 8x fault switches
- PID Capability
- Easy expansion using rackless I/O modules
- 4x push-buttons and 4x toggle switches
- Based on Siemens S7-300 technology (IM151-8 CPU)
- Requires the Step 7 programming software
- For programming, an Ethernet cable is included with the trainer
- Includes Siemens Resource Curriculum CD-ROM (no other curriculum included)

120 V, 60 Hz	**en**
Order no.	**587535**

Note: This product is currently not fully compliant with EU directives.

Additional required accessories:

PLC Software (TIA Portal) 1 User	587904

Optional accessories:

Analog I/O expansion kit	587549

PLC Allen-Bradley MicroLogix 1100 with case

Features
- Rugged suitcase for easy transportation and storage
- Includes a storage compartment for cables and accessories
- Built-in 10/100 Mbps Ethernet/IP port for peer-to-peer messaging
- 8x fault switches
- Embedded Web server and LCD screen
- Online editing functionality
- Digital and analog I/Os: digital (24 V DC): 10x inputs (four 40 kHz high-speed), 6x outputs (two 40 kHz high-speed) analog (0 – 10 V DC): 2 inputs
- PID Capability
- 5x push-button and five toggle switches
- Easy expansion using rackless I/O modules
- Onboard traffic light simulator

120 V, 60 Hz	**en**	**es**
Order no.	**588462**	**588463**
220 V, 50 Hz		
Order no.	**588464**	

Note: This product is currently not fully compliant with EU directives.

Additional required accessories:

RSLogix Micro programming software	587552

PLC Training Systems – LabVolt Series

Operating, programming and troubleshooting PLCs

PLC Allen-Bradley MicroLogix 1200 with case

Features
- Rugged suitcase with removable lid for easy transportation (includes storage compartment for cables and accessories)
- Digital I/Os: 14x inputs and 10x relay outputs, hard-wired to 24 V DC
- 24 V DC built-in power supply
- 12x fault switches
- PID Capability
- Easy expansion using rackless I/O modules
- 3x push-button and 4x toggle switches
- Compatibility with MicroLogix and SLC instruction set
- Requires the RSLogix Micro programming software
- Programming serial cable included (with a serial-to-USB converter)
- Includes curriculum

120 V, 60 Hz	**en**	**es**
Order no.	**587542**	**587543**
220 V, 50 Hz		
Order no.	**587544**	**587545**
240 V, 50 Hz		
Order no.	**587541**	

Note: This product is currently not fully compliant with EU directives.

Additional required accessories:	
RSLogix Micro programming software	587552
Optional accessories:	
Analog I/O expansion kit	582184

PLC Allen-Bradley MicroLogix 1100

Features
- Compact design
- Digital I/O: 8x inputs (24 V DC) and 6x outputs (24 V DC)
- Fully configurable, integrated PID controller
- Requires programming software and communication cable
- Used with the Hydraulics and Pneumatics training systems, Models 6080 and 6081, includes courseware
- Form factor compatible with the perforated work surfaces of the LabVolt Series hydraulics and pneumatics training systems

	en
Order no.	**587570**

Note: This product is currently not fully compliant with EU directives.

Advanced PLC Training System (Rockwell Automation)

Programming high-end Rockwell PLCs and touchscreen

1

120 V, 60 Hz

Order no.	**588969**

Note: This product is currently not fully compliant with EU directives.

Additional required accessories:

Studio 5000 Logix Designer Lite Edition	587890
FactoryTalk View Studio ME	587898

Advanced PLC programming
Automated production lines can be quite complex to design and assemble, but there is even more to consider. The PLCs that are at the center of all the tasks must be programmed to ensure safe and reliable operation.

Programming a PLC efficiently requires a strong familiarity with the specifics of the programming environment and languages. This is exactly the purpose of the Advanced PLC Training System with high-end products from Rockwell Automation. Students learn how to establish communication, program, and transfer projects to a PLC and a touchscreen.

Your benefits
- This compact system uses Rockwell software and hardware that are used in actual factories.
- Comprehensive curriculum with hands-on exercises accompanies the system.
- The system is mounted in a rugged suitcase with casters for easy transportation and storage.
- The system can be used alone or in conjunction with existing PLC applications from the LV Series.
- Communication between devices is accomplished using either an industrial Ethernet switch, SysLink connectors, or 2-mm jacks.

Interdisciplinary training applications
The exercises provided with the Advanced PLC Training system are inspired by the Traffic Lights, Electro-Pneumatics, and Level Process Control PLC applications from the LabVolt Series. Students can connect these additional components while developing their programs or simulate the inputs and outputs instead. A SysLink interface also allows connection to Modular Production System (MPS®) stations from Festo.

Industrial components of the latest technology
- CompactLogix 5370 controller (1769-L24ER-QBFC1B)
- PanelView Plus 7 graphic terminal
- Stratix 2000 industrial Ethernet switch
- 16 digital inputs
- 16 digital outputs
- 4x universal analog inputs
- 2x configurable analog outputs
- 3x high-speed counters
- 2x high-speed counter output points
- 2x NO push-buttons
- 2x NC push-buttons
- 4x toggle switches
- 2x potentiometers
- 8x indicator lamps

Eight switches allow the addition of electrical faults during troubleshooting exercises.

Topic coverage
- Familiarization with Studio 5000 and FactoryTalk View Studio2
- Using standard PLC instructions
- Programming in four different IEC 61131 languages with focus on ladder logic
- Designing human-machine interfaces
- Troubleshooting

The system allows students to acquire hands-on experience with industrial control equipment. Realistic examples are used to motivate students. These examples are displayed on the graphic terminal, and correspond to real PLC applications that can be interfaced with the trainer. A student manual is provided, as well as an Instructor guide.

CNC technology

Some training solutions included in this product guide do not yet fully comply with EU directives regarding safety, health, and environmental protection (CE marking). A special note was added to the description of such products. If you are interested in one of them, but require such compliance, please contact your Festo sales representative.

CNC technology from EMCO
Efficient turning and milling

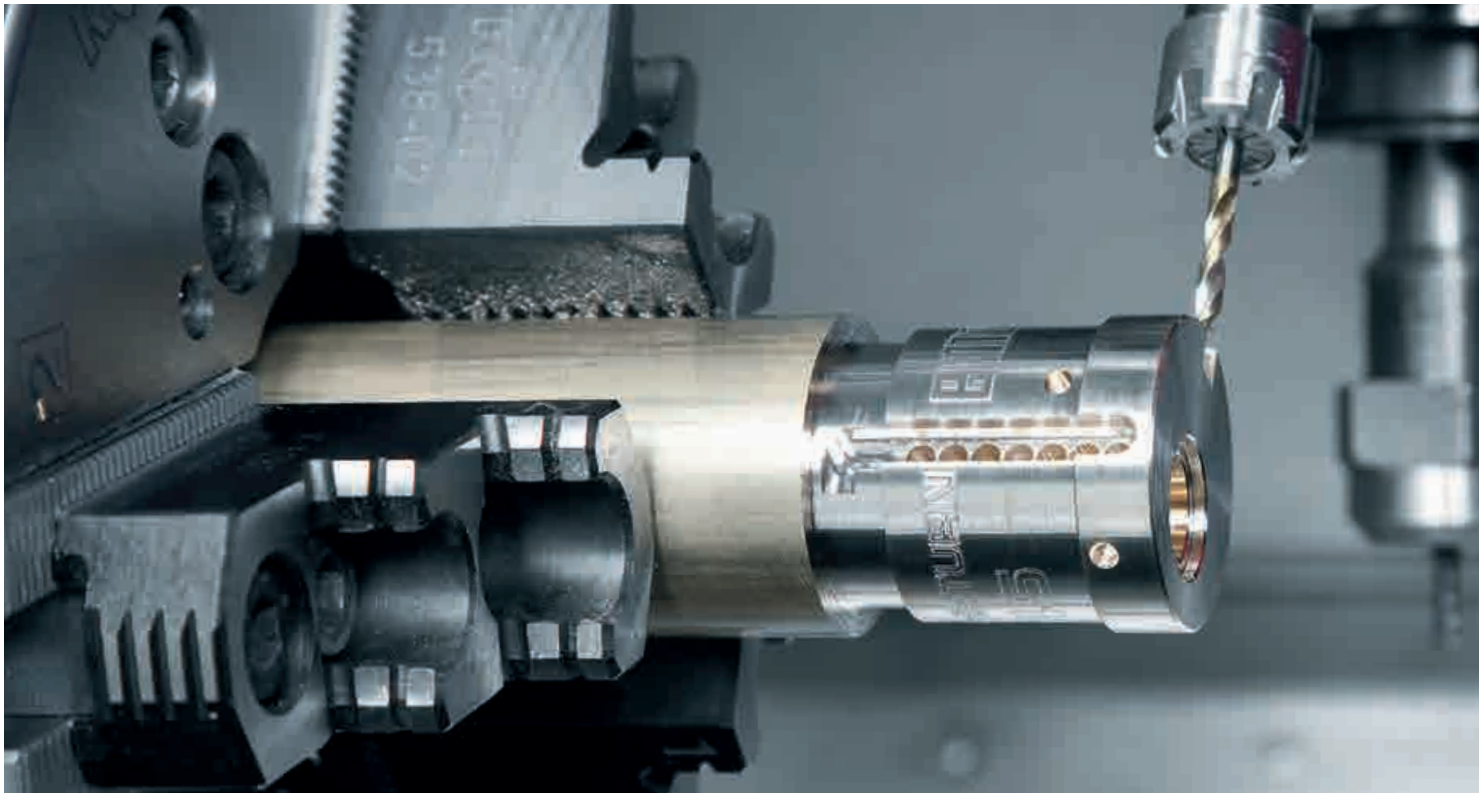

The training program

Festo Didactic integrates CNC training into its learning system, thus meeting the requirements of modern basic and advanced training in the metals sector. CNC programming and cutting, a key task in many metalworking companies, places high demands on students.

Market leading CNC technology
Machine manufacturer EMCO offers a unique training concept consisting of high quality machines, modular software and supporting teachware.

EMCO is the leading machine manufacturer in CNC training. All machines are tailored to the specific requirements of a training situation: safety engineering compliant with CE directives, variety of controllers, available space and price. With the EMCO machines, a complete solution can be offered, from conventional systems right up to CNC machines.

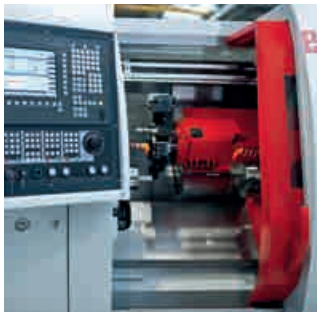

EMCO CNC machines –
By the industry, for the industry
EMCO provides intelligent solutions for CNC turning and milling cutting for the industrial sector. EMCO's extensive product range includes everything from conventional turning and cutting machines to CNC turning centers through to fully automatic production cells.

Perfect solutions for basic and advanced training
You can benefit from this know-how. EMCO machines for basic and advanced technical training feature:
- Design and quality that meet the current industry standards
- Long service life and consistently high precision of parts produced
- Range and design of functionality corresponding to modern industrial machines

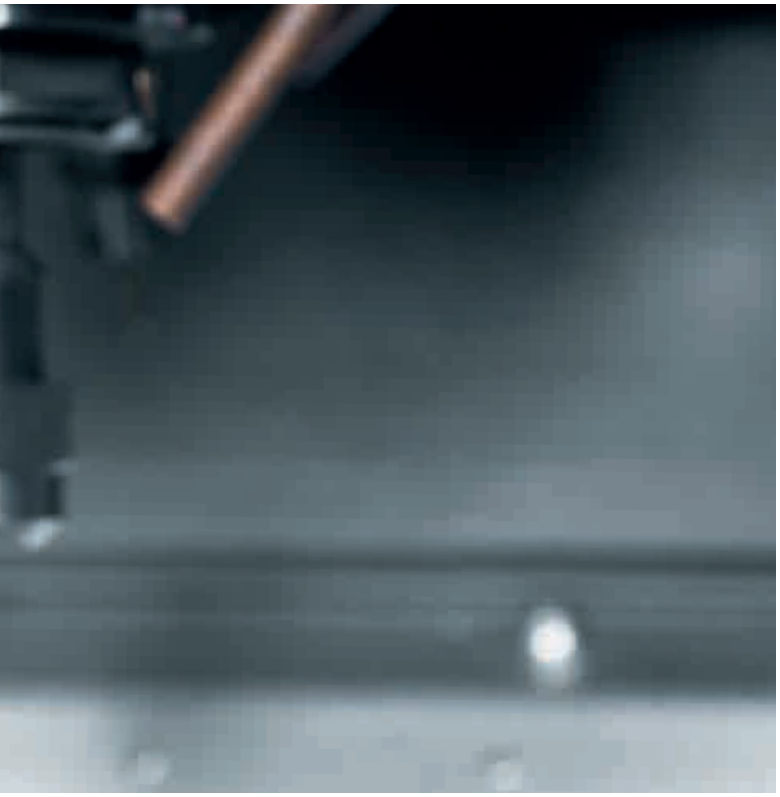

CAD/CAM and simulation

CAMConcept from EMCO provides you with a CAD/CAM system for turning and milling with 3D graphical simulation. Design simple parts with the integrated CAD functionality and create your CNC program without any controller-specific CNC knowledge.

As an option, the WinNC machine controller can also be supplemented with 3D simulation. Win3D-View allows easy 3D simulation for turning and milling.

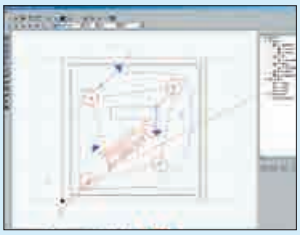

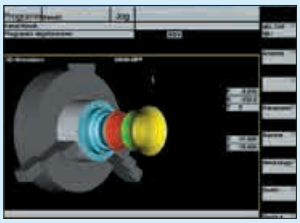

Changing controller? No problem!
Standard CNC machines are permanently linked to a CNC controller. If you need a different controller for training, this change almost always involves buying a new machine. However, the PC controlled turning and milling machines are different: It is easy to change the controller keypad, load different software and start cutting. This allows you to use all standard industrial controllers on a single machine.

Individual machine or CNC laboratory
The controller software is also available as an offline programming workstation. In conjunction with individually available controller keypads, we will be happy to plan a complete CNC training laboratory for you, with different controllers such as SINUMERIK, Fanuc or HEIDENHAIN.

CNC turning and milling technology integrated in systems
Our realistic systems accurately reflect the complexity of modern vocational apprenticeships. We have years of experience in FMS/CIM, and offer solutions using state-of-the-art production technologies as well as the latest control technology. Also, thanks to the switchable control of the EMCO Concept CNC machines, they are always one step ahead when it comes to CNC technology.

Please contact us for individual solutions. We'll be happy to advise you.
→ www.festo-didactic.com

For information on our Industry 4.0 and automation technology expertise, see the section on CP Factory
→ Pages 264 – 273.

Concept MILL
High-End training solutions

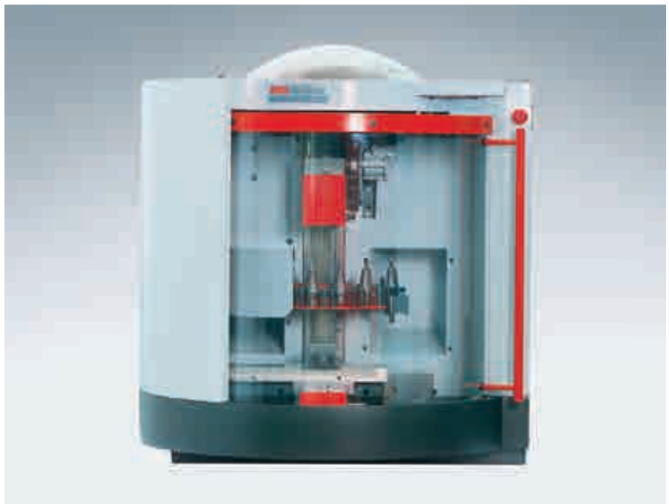

Milling machine Concept MILL 55

This compact milling machine is well suited to the training bench and has almost all the features of an industrial machine: optional with 8-station tool changer with swivel arm and pick-up system, NC indexing device as fourth axis, minimum quantity lubrication and latest state-of-the art control technology.

Automation options: integration in the FMS or CIM systems on request.

Highlights
- Stable, gray cast iron construction, suitable for industrial use
- Clockwise/anticlockwise spindle rotation
- Infinitely variable main drive
- Automatic reference points
- Fully covered working area
- Integrated EMCO EASY CYCLE control system

Concept MILL 55 without tool changer	**538395**
Concept MILL 55 with tool changer	**538865**

Milling machine Concept MILL 105

The compact machine is fitted with an infinitely variable main drive, 10-station tool changer, pneumatic vice and NC dividing attachment as an optional 4th axis. The slides and load-bearing elements of the Concept MILL 105 are made of gray cast iron, ensuring the highest precision.

Automation options: integration in the FMS or CIM systems on request.

Highlights
- Stable, gray cast iron construction, suitable for industrial use
- 10-station tool changer with directional logic
- Backlash-free bearing of the working spindle in precision, lifetime-lubricated, angular ball bearings
- Infinitely variable main and feed drives
- Realistic execution of all important milling operations
- Integrated EMCO EASY CYCLE control system

Concept MILL 105	**534590**

Milling machine Concept MILL 260

Training at its best: with 7 kW drive power and a 20-station tool magazine with fast double gripper. Thanks to its sturdy and compact design, the Concept Mill 260 fits into the smallest of spaces.

Automation options: can be integrated in FMS or CIM systems on request.

Highlights
- High drive speed
- 20-station tool magazine
- Robust and compact machine design
- Best view when fully enclosed
- Crane loading possible
- Servo motor technology in all axes
- USB and Ethernet interfaces
- 21.5” TFT touchscreen monitor including Easy2control on-screen keyboard

Concept MILL 260	**8048100**

Concept TURN

High-End training solutions

Lathe Concept TURN 60

The Concept TURN 60 is a PC-controlled 2-axis CNC desktop lathe which conforms to the industry standard in terms of design and function. Building on the successful CT 55 model, the CT 60 offers the user greater performance and functionality, all according to the current lathe standard ISO 23125.

Automation options: integration in FMS or CIM systems on request.

Highlights
- Compact desktop CNC lathe
- Inclined design suitable for industry
- High-resolution axis motors
- Clockwise/anticlockwise rotating spindle
- Infinitely variable main drive
- Automatic 8-position tool changer
- Automatic referencing
- Profile rail guides (linear guides)
- Safety technology according to the latest lathe standard

Concept TURN 60	**8029475**

Lathe Concept TURN 105

The PC-controlled 2-axis lathe with table format not only easily fulfills all basic requirements for technical education and training but also manifests the finest technology: All precision components on the Concept TURN 105 such as headstock, slide, tool system, and tailstock are installed on a rigid, vibration-damping, gray cast-iron inclined bed. Generously sized motors ensure high feed forces and acceleration values.

Automation options: integration in the FMS or CIM systems on request.

Highlights
- Stable, gray cast-iron inclined-bed construction
- Three-point support for machine bed
- Hardened guideways
- Central lubrication system
- 8-station tool changer
- Fully enclosed working area
- Integrated EMCO EASY CYCLE control system

Concept TURN 105	**534575**

Lathe Concept TURN 260

Uncompromising quality down to the last screw at an unbeatable price. With an extremely solid machine bed, a thermally symmetrical spindle stock, precision spindle bearing, pre-tensioned roller bearing guides in all axes and a rapid tool revolver. Also the switchable controller EMCO WinNC.

Automation options: integration in FMS or CIM systems on request.

Highlights
- Extremely solid machine bed, maximum thermal stability
- Top machining precision
- Extremely compact machine design
- Switchable WinNC controller
- Switches between the WinNCs in a few minutes
- Top European quality of workmanship
- 21.5” TFT touchscreen monitor including Easy2control on-screen keyboard

Concept TURN 260-T	**8048094**
Concept TURN 260-TC	**8048095**
Concept TURN 260-TM	**8048096**
Concept TURN 260-TCM	**8048097**

Concept TURN and MaxxMill

On the way to series production

Lathe Concept TURN 460

A new dimension in industrial CNC training. Equipped with a C-axis, powered tools and digital drive technology, the function and performance of a Concept TURN 460 is equivalent to that of a modern industrial machine.

Automation options: integration in FMS or CIM systems on request.

Highlights
- Universal application
- Digital drive technology
- Extraordinary dynamic response
- Optimal thermal stability
- Top machining precision
- Compact machine design
- 21.5” TFT touchscreen monitor including Easy2control on-screen keyboard

Concept TURN 460-TC	**8068168**
Concept TURN 460-TCM	**8068169**

Milling machine MaxxMill 400

The MaxxMill 400 is a new dimension in industrial high-tech CNC training. Equipped with 5 axes and digital drive technology, the function and performance of the MaxxMill 400 is equivalent to that of a modern industrial machine. From 5-axis machining to simultaneous 5-axis machining, MaxxMill 400 sets new standards in practical CNC training. Either the industrial standard Heidenhain TNC 640 or Sinumerik Operate can be used as the control technology.

Highlights
- Spindle power 7 kW/S6
- Rotational speed 50 – 12,000 rpm
- Travel X/Y/Z 350/250/300 mm
- Table: driven by a worm gear unit or torque motors
- Table dimensions: Ø 400 mm
- Drum magazine with mountings for 20 tools
- Tool change time (tool – tool) 2 seconds

MaxxMill 400	**On request**

Automated CNC machines

Integrating CNC machines in installations like the CP Factory allows trainees to be taught using complex systems. It brings together all subsections of modern production plants – logistics, manufacturing, assembly and order management. The individual systems can be separated using mobile robotics. Thanks to their switchable controllers, the control technology of the EMCO Concept machines is always up to date so there is no need to change the complete machine.

Highlights
- Fully automated CNC machine
- Modular structure
- Implementation of the latest production technologies
- Latest control technology
- Can be combined with mobile robotics

Automated CNC machines	**On request**

Software

The principle of the interchangeable controller

EMCO Easy2control

EMCO Easy2control is a software package that displays the controller-specific and machine keyboards of WinNC controllers on a 16:9 full HD screen.

The different control panels for the machine, the controller and the quick access functions can be switched via tabs.

1 **Machine keyboard**
The operating area of the controller is reduced to essentials

2 **Quick access functions**
Operating area of the machine

3 **Controller-specific keyboard**
Operating area of the CNC controller

The keys and rotary knobs can be operated using the mouse or directly on the touchscreen.

EMCO Easy2control
On request

Win NC control software

- Operation using soft keys as in an original industrial controller
- 2D graphical simulation with auto zoom function
- Modern user interface
- Wide range of operating options
- Various language versions

Equipment
- Installation of interchangeable controllers on concept machines and/or PC
- Controller-specific keypad on concept machines and/or PC
- Easy replacement of key-specific module in just one minute

Sinumerik 810D/840D turning/milling
On request
Sinumerik Operate turning/milling
On request
Fanuc turning/milling
On request
HEIDENHAIN milling
On request

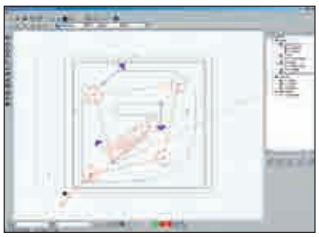

CAMConcept

CAMConcept is an innovative software for complete CAD/CAM and NC training – from design to production. All the core functions of CAD programs are available. Clear graphical CNC cycles allow rapid programming, while 3D simulations and collision checks guarantee reliable program monitoring.

CAMConcept turning/milling

Network capable CAD/CAM programming system for turning or milling.

CAMConcept
On request

CNC Lathe and Mill Training Systems
LabVolt Series

Practical learning aims
The systems allow students to practice CNC code programming and editing, learn to operate lathe and mill components, controls, and tools, set a programmed reference zero, follow the steps necessary to turn a specified part, and apply the machine code language to current lathe and mill technologies.

Programming software
Each machine can be programmed using the LabVolt CNC Lathe or Mill software program.

Both programs feature a parametric-based graphical tool editor, a 3D (three-dimensional) Tool Path Emulator, and an easy-to-use graphical interface. The software can import NC part programs created with other CAM programs that support the G and M codes.

On-board microprocessor
Each machine has an on-board microprocessor that stores downloaded part programs, thereby eliminating the need for a dedicated computer to control the machine.

Each machine connects directly to a PC's Ethernet or serial port to provide simultaneous programming and parts processing. No additional interface card is required.

Connection to work cells
The CNC Lathes and Mills are designed to support low-voltage communications with robotic units and accessories through TTL connectors to create automated work cells ideal for flexible manufacturing systems (FMS) and computer integrated manufacturing (CIM).

Superior CNC training

The LabVolt Series lathe and mill training focuses on the skills required to perform Computer Numerical Controlled (CNC) turning and milling tasks, both simple and more sophisticated.

These systems provide training in computer-aided manufacturing (CAM) using microprocessor-driven, light- or heavy-duty CNC lathes and mills.

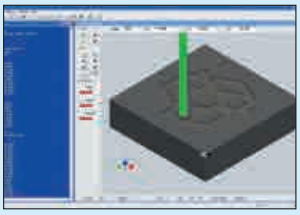

Virtual learning tools
The CNC lathe and mill software programs offer a user-friendly environment for effective learning of CNC machining. Using a computer, students can develop practical skills at programming, simulating, and controlling CNC lathes and mills from the LabVolt Series.

Convenient control panel
- Easy-to-use membrane keypad enables students to operate and control the machine
- Ability to restart programs from stopping point after a safety interruption
- 20-character by four-line LCD display
- Stall light indicator/push-button abort key
- Parameters (spindle speed, feed rate, reference point, axes coordinates) can be set by accessing different menus – these parameters are displayed on the screen during operation
- Manual mode controls

Safety Features
- Safety panels around the work area
- Key-released emergency stop push-button
- Sensor switches for over-travel protection on all axes
- Magnetic interlocks automatically stop the operation if a door is opened during machining

Selection of stock materials
The lathe and the mill can machine pieces of soft materials, such as plastic and wax, as well as harder materials, such as aluminum, mild steel, and brass.

Assortments of machining tools and stock materials of different sizes are offered as options to enhance and expand training system capabilities.

CNC Lathe Training System
Light Duty

120 V, 60 Hz	en	es
Order no.	**582511**	**589103**
220 V, 50 Hz		
Order no.	**582512**	
240 V, 50 Hz		
Order no.	**582513**	

Note: This product is currently not fully compliant with EU directives.

The most important components, at a glance:

CNC Lathe – Light Duty
Black and white Acetal turning stock set (50 stocks, 19 mm diameter x 76.2 mm L)
CNC Lathe Software – 1 user

Recommended accessories

Black and white Acetal turning stock set (50 stocks, 19 mm diam. x 76.2 mm L)	763431
Black Acetal turning stock set (100 stocks, 19 mm diam. x 76.2 mm L)	763432
White Acetal turning stock set (100 stocks, 19 mm diam. x 76.2 mm L)	763433
Aluminum turning stock set (100 stocks, 19 mm diam. x 50.8 mm L)	763434
Aluminum turning stock set (100 stocks, 12.7 mm diam. x 63.5mm L)	763437
Brass turning stock set (25 stocks, 12.7 mm diam. x 76.2 mm L)	763435
Four-jaw chuck	587842
Turning tool set	582226
Basic turning set	763436
Carbide tool set	582121
Parting-off tool and holder	582165

CNC Lathe System – Light Duty

The CNC Lathe – Light Duty consists of a horizontal lathe, a head-stock, and a tailstock. It can machine pieces of soft materials, such as plastics and waxes, as well as harder materials, such as aluminum and brass. Pieces can be turned into a variety of cylindrical bumps, grooves, and hollows. Stock is mounted onto the lathe using a three-jaw chuck that centers the stock and holds it in place.

Main features
- Software allowing the programming of up to 20 tools
- Includes a three-jaw, self-centering chuck
- Each axis driven by its own DC stepper motor
- Programmable speeds of 0 – 36 cm/ min (0 – 14 in/min)
- 60 W (0.08 hp) DC variable-speed spindle motor
- Programmable spindle motor with chuck speed of 0 – 2800 r/min

Also order:
CNC Lathe Software

The CNC Lathe Software is a Windows-based software that features a parametric-based graphical tool editor, a 3D tool path emulator, and an easy-to-use graphical interface. The software can import NC part programs created using other CAM software CAM that support the G and M codes.

The included user guide covers the installation of the software program, an overview of the CNC lathe software, the menus, the part program editors, and tutorial exercises.

CNC Lathe Software – 1 user

en	**582278**
es	**582280**
fr	**582279**

Several license options are available. Please contact us.

CNC Lathe Training System

Heavy Duty

CNC Lathe System – Heavy Duty

The CNC Lathe – Heavy Duty uses two ball screws, each driven by a stepper motor, to move the cross slide that carries the cutting tool along the Z-axis (right and left) and X-axis (in and out) with maximal positional accuracy. The speed of each stepper motor can be programmed separately for feed rates up to 762 mm/min (30 in/min). A 746 W (1.0 hp) motor rotates the spindle and three-jaw chuck, and thus the stock, at speeds programmable up to 3400 r/min.

Main features

- An optional 10-tool automatic tool changer is available
- Capable of threading using an optical-encoder feedback loop
- Batch mode for independent operation or operation in CIM cells
- Software allowing the programming of up to 10 tools
- 745 W (1 hp) constant-torque DC spindle motor
- Quick-change tool post
- Z-axis ball screw protected by a dust cover, facilitating maintenance

Also order:

CNC Lathe Software

The CNC Lathe Software is a Windows-based software that features a parametric-based graphical tool editor, a 3D tool path emulator, and an easy-to-use graphical interface. The software can import NC part programs created using other CAM software CAM that support the G and M codes.

The included user guide covers the installation of the software program, an overview of the CNC lathe software, the menus, the part program editors, and tutorial exercises.

CNC Lathe Software – 1 user

en	**582278**
es	**582280**
fr	**582279**

Several license options are available. Please contact us.

120 V, 60 Hz	**en**	**es**
	582517	**582518**
with automatic tool changer	**582522**	**582523**
220 V, 50 Hz		
	582519	**582520**
with automatic tool changer	**582524**	**582525**
240 V, 50 Hz		
		582520
with automatic tool changer		**582526**

Note: This product is currently not fully compliant with EU directives.

The most important components, at a glance:

CNC Lathe – Heavy Duty
Black and white Acetal turning stock set (50 stocks, 19 mm diameter x 76.2 mm L)
CNC Lathe Software – 1 user

Recommended accessories

Black and white Acetal turning stock set (50 stocks, 19 mm diam. x 76.2 mm L)	763431
Black Acetal turning stock set (100 stocks, 19 mm diam. x 76.2 mm L)	763432
White Acetal turning stock set (100 stocks, 19 mm diam. x 76.2 mm L)	763433
Aluminum turning stock set (100 stocks, 19 mm diam. x 50.8 mm L)	763434
Aluminum turning stock set (100 stocks, 12.7 mm diam. x 63.5mm L)	763437
Brass turning stock set (25 stocks, 12.7 mm diam. x 76.2 mm L)	763435
Four-jaw chuck	763508
Standard Carbide tool set	587844
Parting-off tool and holder	587846
Automatic tool changer	582276
Machining kit	587851
Heavy-duty drill chuck	587849
Indexable boring tools	587848
External threading tool	587847

CNC Mill Training System
Light Duty

120 V, 60 Hz	**en**	**es**
Order no.	**582514**	**589220**
220 V, 50 Hz		
Order no.	**582515**	
240 V, 50 Hz		
Order no.	**582516**	

Note: This product is currently not fully compliant with EU directives.

The most important components, at a glance:

CNC Mill – Light Duty
Wax milling stock set (100 stocks, 50.8 x 50.8 x 12.7 mm)
CNC Mill Software – 1 user

Recommended accessories

Wax milling stock set (100 stocks, 127 x 63.5 x 12.7 mm)	763438
Wax milling stock set (100 stocks, 50.8 x 50.8 x 12.7 mm)	763439
Plexiglas milling stock set (15 stocks, 127 x 63.5 x 12.7 mm; ...	
... 10 stocks, 152.4 x 76.2 x 12.7 mm; 15 stocks 50.8 x 50.8 x 12.7 mm)	763440
Plexiglas milling stock set (100 stocks, 127 x 63.5 x 12.7 mm)	763441
Plexiglas milling stock set (100 stocks, 50.8 x 50.8 x 12.7 mm)	763445
Plexiglas milling stock set (25 stocks, 152.4 x 76.2 x 12.7 mm)	763443
Aluminum milling stock set (50 stocks, 50.8 x 50.8 x 12.7 mm)	763444
Engraving plate set	763442
End mill set	582231
Intermediate milling set	582232
Pneumatic vise	582234
Mill vise	789762

CNC Mill System – Light Duty

The CNC Mill – Light Duty consists of a milling table, a headstock carrying the spindle motor, and a vertical column with dovetail slide. The stock can either be mounted directly on the mill table or secured in a vise that holds it to the table.

Main features
- Software included with full 3D tool path emulator and easy-to-use graphical interface, allowing the programming of up to twenty tools
- 12-key membrane keypad with 20-character by four-line LCD display
- Feed-rate and spindle-speed override capability
- Removable side panel for access to robot
- Connects to host computer through RS-232 or Ethernet port

Also order:
CNC Mill Software

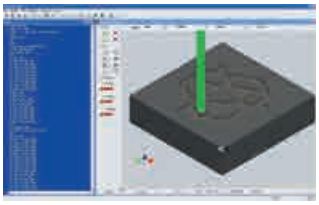

The CNC Mill Software is a 32-bit software that runs under Windows. It features a parametric-based graphical tool editor, a 3D tool path emulator, and an easy-to-use graphical interface. The software can import NC part programs created with other CAM programs that support the G and M codes.

The included user guide covers the installation of the software program, an overview of the CNC mill software, the menus, the part program editors, and tutorial exercises.

CNC Mill Software – 1 user

en	**582321**
es	**582323**
fr	**582322**

Several license options are available. Please contact us.

CNC Mill Training System
Heavy Duty

CNC Mill System – Heavy Duty

The CNC Mill – Heavy Duty consists of a milling table, a headstock carrying the spindle motor, and a cast-iron vertical column with dovetail slide. Two ball screws, each driven by a stepper motor, are used to move the table along the X axis (left and right) and Y axis (backward and forward) to feed the stock through the periphery of the end mill. A third ball screw, also driven by a stepper motor, is used to move the headstock along the Z axis (up and down) for positioning the end mill.

Main features
- 12-key membrane keypad with 20-character by four-line LCD display
- 746 W (1 hp) motor
- Rear panel input for 5250 TTL control
- Pneumatic vise output
- Connects to host computer through RS-232 or Ethernet port
- Sturdy construction, with larger, more powerful components than the light-duty CNC Mill
- Speed of each stepper motor can be programmed separately for feed rates up to 508 mm/min (20 in/min)

Also order:
CNC Mill Software

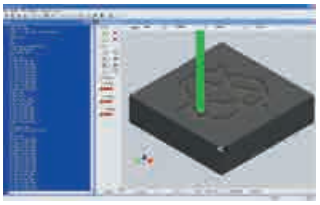

The CNC Mill Software is a 32-bit software that runs under Windows. It features a parametric-based graphical tool editor, a 3D tool path emulator, and an easy-to-use graphical interface. The software can import NC part programs created with other CAM programs that support the G and M codes.

The included user guide covers the installation of the software program, an overview of the CNC mill software, the menus, the part program editors, and tutorial exercises.

CNC Mill Software – 1 user

en	**582321**
es	**582323**
fr	**582322**

Several license options are available. Please contact us.

120 V, 60 Hz	**en**	**es**
Order no.	**582527**	**582528**
220 V, 50 Hz		
Order no.	**582529**	**582530**
240 V, 50 Hz		
Order no.	**582531**	

Note: This product is currently not fully compliant with EU directives.

The most important components, at a glance:

CNC Mill – Heavy Duty
Wax milling stock set (100 stocks, 50.8 x 50.8 x 12.7 mm)
CNC Mill Software – 1 user

Recommended accessories

Wax milling stock set (100 stocks, 127 x 63.5 x 12.7 mm)	763438
Wax milling stock set (100 stocks, 50.8 x 50.8 x 12.7 mm)	763439
Plexiglas milling stock set (15 stocks, 127 x 63.5 x 12.7 mm; ...	
... 10 stocks, 152.4 x 76.2 x 12.7 mm; 15 stocks 50.8 x 50.8 x 12.7 mm)	763440
Plexiglas milling stock set (100 stocks, 127 x 63.5 x 12.7 mm)	763441
Plexiglas milling stock set (100 stocks, 50.8 x 50.8 x 12.7 mm)	763445
Plexiglas milling stock set (25 stocks, 152.4 x 76.2 x 12.7 mm)	763443
Aluminum milling stock set (50 stocks, 50.8 x 50.8 x 12.7 mm)	763444
Engraving plate set	763442
Four-jaw chuck set	582312
Quick tool changing system	582310
Heavy-duty milling vise	582313
Intermediate milling set	582314
Engraving tool set	582317
Pneumatic vise	582319

MPS® – The modular production system

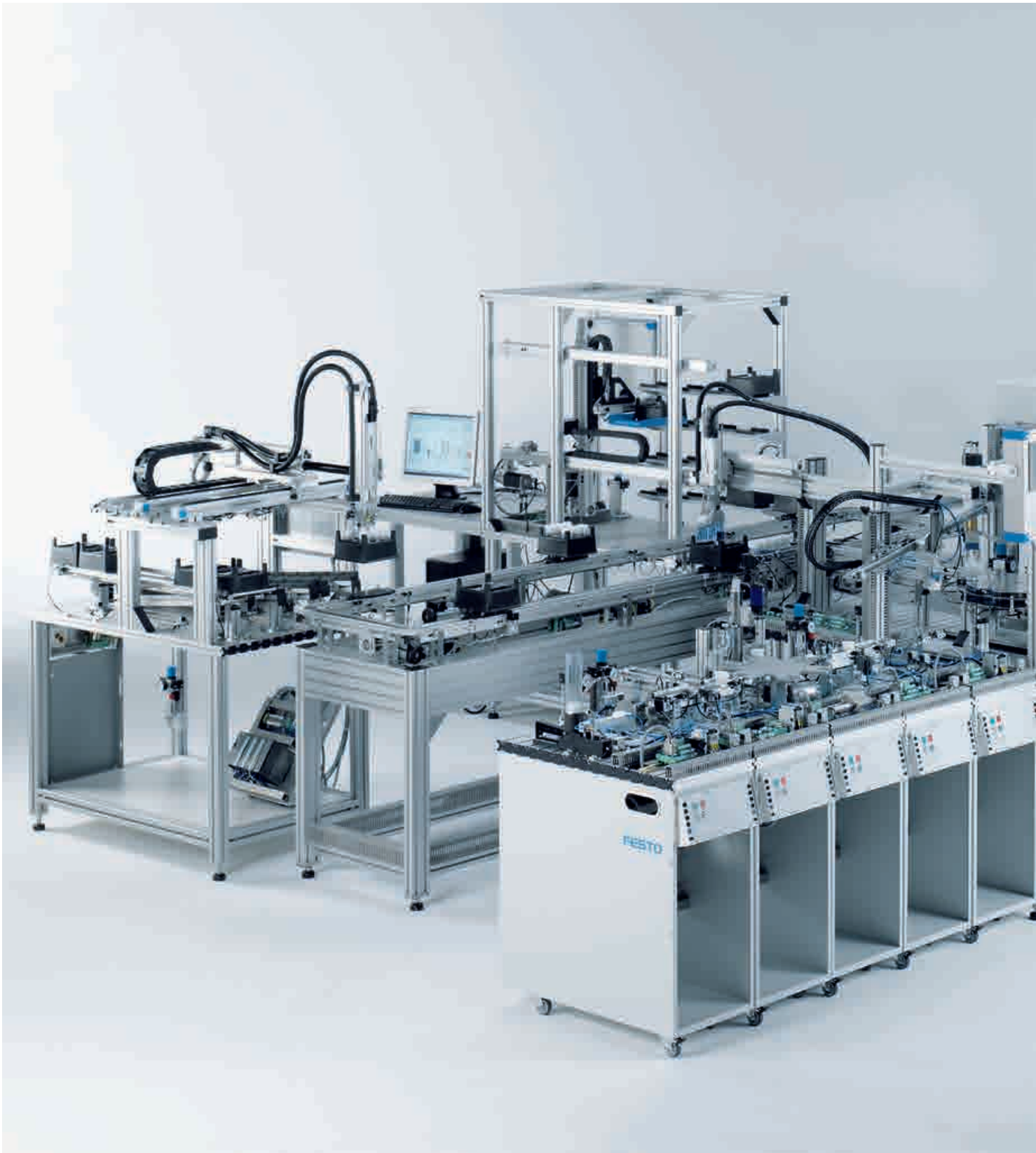

MPS® – The modular production system

From module to learning factory

Practical at every level

The modular production system MPS® sets the right challenges and provides appropriate learning environments for various requirements:
– Differentiated functions
– Individual and combined units
– Different drive technologies
– Material and information flow
– Modern and variable control concepts

Modular variety

The MPS® transfer system fits in a cabinet but can also be combined to create networked production lines.

The MPS® stations are supplied with trolleys, provide space for the control system, are fully assembled and can be a basis for complex learning factories.

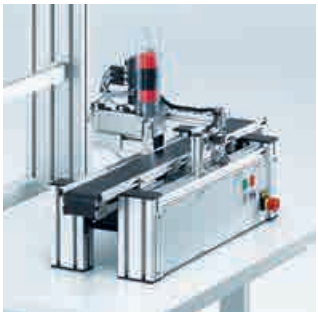

MPS® transfer system
The ideal system for anyone focused on process and automation:
– One line, various drives, numerous modules and functions with state of the art technology
– Transportable, designed for cabinets, individually and combined in different layouts
– Defined interfaces enable individual modules to be viewed and quickly changed to rapidly adapt to the required learning content.

MPS® stations
The system for anyone who values industrial basic and advanced training, mechatronics and automation, value retention and robustness of the equipment:
– Since 1991, the system for the mechatronics world championships
– Stations represent the most common sub-processes in any automated production system
– Platform for problem based practical training
– Maximum industrial relevance in automation and handling technology

Real and virtual

The MPS® is not only the platform for training with maximum transfer to industrial practice, it also provides unique flexibility for choosing the appropriate methods:
– All MPS® stations and systems are identical to the models in the CIROS® process simulation
– PLC training and troubleshooting can be provided using the real model and the 3D models in CIROS®

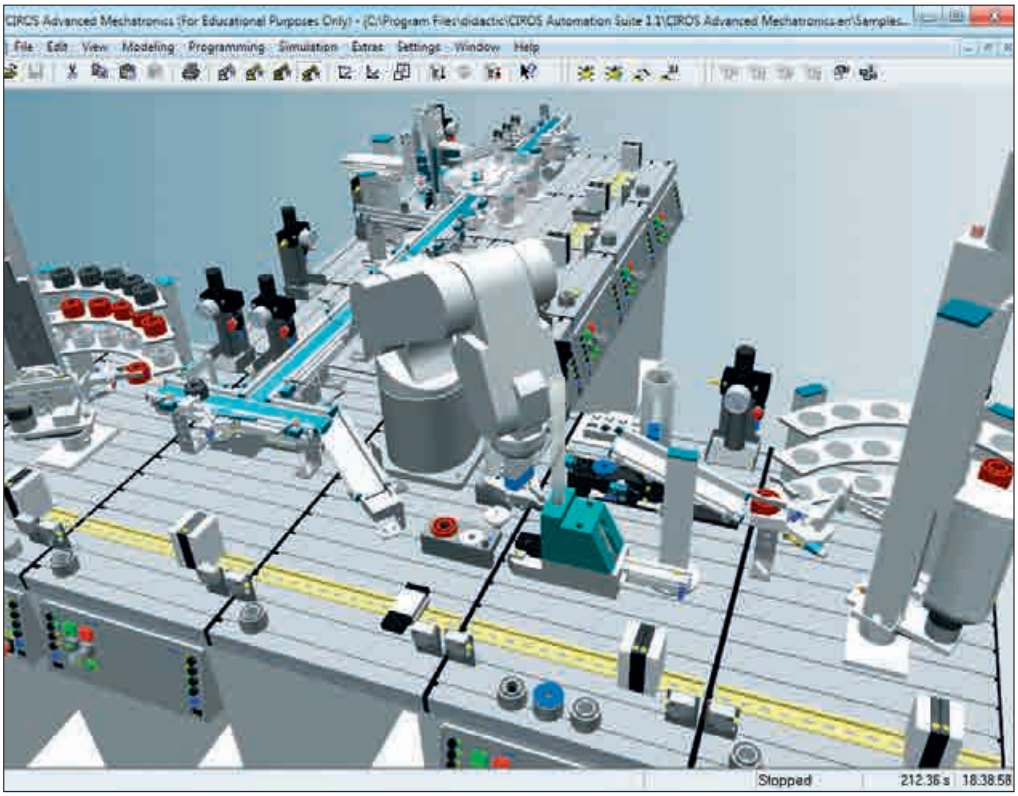

MPS® 500-FMS
Once you have mastered the sub-processes in the MPS® stations, you can use the MPS® 500 FMS to focus on thinking and operating in networked systems.
– The belt rotation system and bus concept allow variable system concepts
– Sub-processes on the one hand and the overall system on the other provide project tasks and challenges for working in a team
– All FMS systems are guaranteed ready-to-use when delivered

MPS® 200 complete system
Combining stations into systems for selected areas and complexity levels:
– Topic-specific complete solutions including control system, networking, application and learning software
– For process-oriented, cross-technology courses at schools and technical schools
– Ready to use immediately and expandable
– Versions for small and large budgets

worldskills

Since 1991, the modular production system MPS® has been the competition platform for the mechatronics world championships.

Innovative learning systems and solutions by the Solution Center

Customized solutions for specific customer needs

Ideal training for Industry 4.0

The Solution Center team offers several learning solutions that are well-integrated into the Festo Didactic portfolio.

The solutions cover a wide range of topics, from entry-level mechatronics through Cyber Physical Systems, enabling students to develop the right skills and to acquire the knowledge relevant to Industry 4.0.

The learning solutions can integrate MPS® PA stations or MPS® stations, or even both, combined in a hybrid factory concept. As an introduction to the Cyber-Physical Factory, the CP Lab is also an important foundation in the Qualification for Industry 4.0. Other solutions tackle related subjects, including robotics, logistics, flexible manufacturing, and integrated systems.

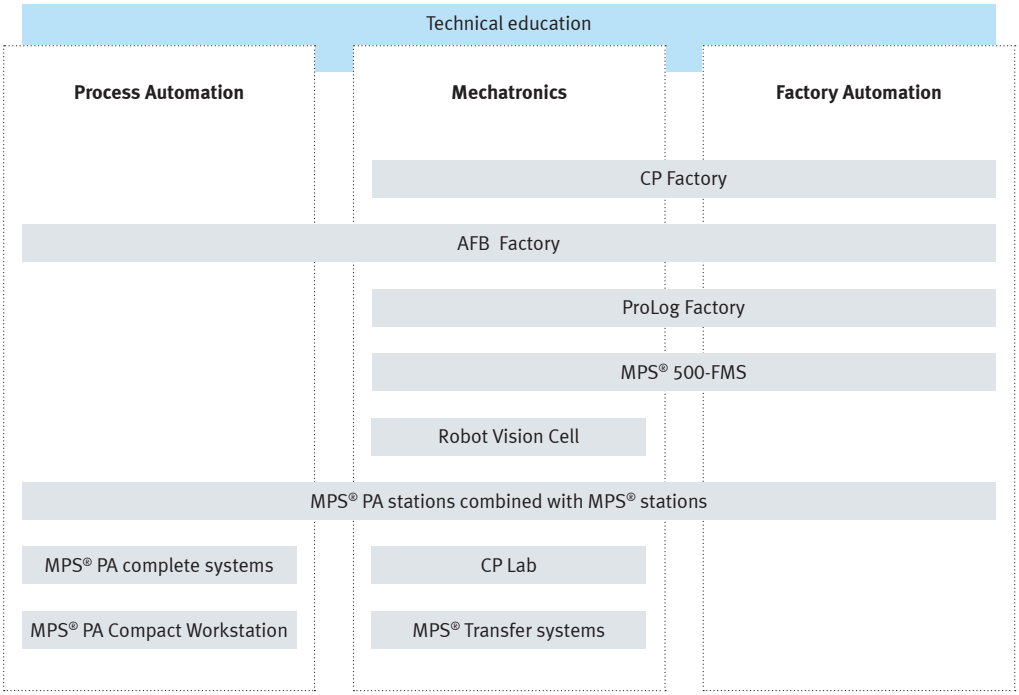

The Festo Didactic Solution Center team provides innovative learning systems and solutions that fit customer-specific needs and requirements.

The team brings a very high level of technical education expertise in the fields of process automation, mechatronics, and factory automation, developing equipment and learning scenarios that faithfully replicate today's industry.

To contact the Solution Center:
→ did_sc@festo.com

Professional advice and support

Modular and future-proof
What characterizes the learning systems created by the Solution Center is their high practical relevance achieved through the use of real industrial components combined with the intuitive teaching of the educational content. The systems are modular, allowing for expansion and flexibility, making your investment future-proof with no dead-ends.

Experience and expertise
Drawing on 20 years of experience, the Solution Center team involves mechanical, software and electrical engineers, overlay sales, purchasing, and production, as well as delivery services and training. This multidisciplinary team works hard to make sure the development of the tailored solution goes smoothly and efficiently.

Context-specific solutions
Customized solutions are designed and produced according to the needs of teachers, trainers, and researchers. Solutions enhance training and increase the qualification of students and workers alike, whether in vocational schools, technical colleges, training centers, universities research organizations, or industrial companies.

Actuating, networking, operating, monitoring, optimizing

Controlling processes as in industry

Close to reality

In MPS® – as in real production plants – controllers are responsible for signal processing. The signals in the system can be transferred directly from the station to the controller via I/Os or various fieldbus systems or between controllers to support information exchange.

Market leading industrial standards

The MPS® is based on industrial standards. Automation solutions and trends from the market leaders are part of the MPS® concept.
- Programmable logic controllers from the market leaders
- Project planning and programming tools complying with IEC 61131

The most commonly used fieldbuses: PROFINET, PROFIBUS, AS-Interface, Ethernet

Choice of PLC – optimized for training use
We can fit an EduTrainer®, providing a completely assembled and wired PLC rack, with the PLC of your choice and, if required, fieldbus components as well. The advantage of the EduTrainer® in the MPS® station is clear: you can remove the controller and use it for other processes or in laboratory furniture.

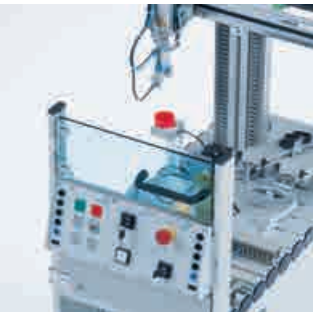

Reliable safety modules
Hardly any issue affects so many employees in a company as health and safety. Emergency stop, safety curtains, safety doors and failsafe control systems are all part of a system made up of MPS® stations.

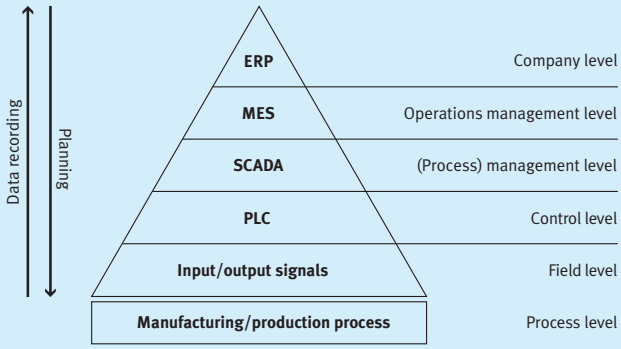

From field to company level

All control technologies and systems used in industrial production can be integrated into the modular production system and the learning factories from Festo Didactic. This gives basic and advanced training a high level of practical relevance at all levels of the CIM pyramid.

Plug and run
The station, the control console and the EduTrainer® are all equipped with standardized SysLink interfaces. All you have to do is plug them in; there is no need to wire different connectors.

Hot topic – energy saving
On the trail of waste: identifying potential savings means first of all measuring current consumption. The Wattmeter acts as a smart meter for training systems with a 24 V DC power supply and a maximum of 120 Watts.

A switchable interface for 0 – 10 V DC or 4 – 20 mA is integrated for data transmission. Ethernet is available as an option.

Optimizing processes – Ensuring quality in production
Production defects or tolerance deviations identified too late or not at all often lead to expensive, consequential damage or recalls.

Optional modules in the MPS® are responsible for continuous quality inspection. Laser sensor and analog sensors measure the workpiece height. A signal converter can then digitize the analog signal.

MPS® Transfer system

Get moving with mechatronics and electronics training

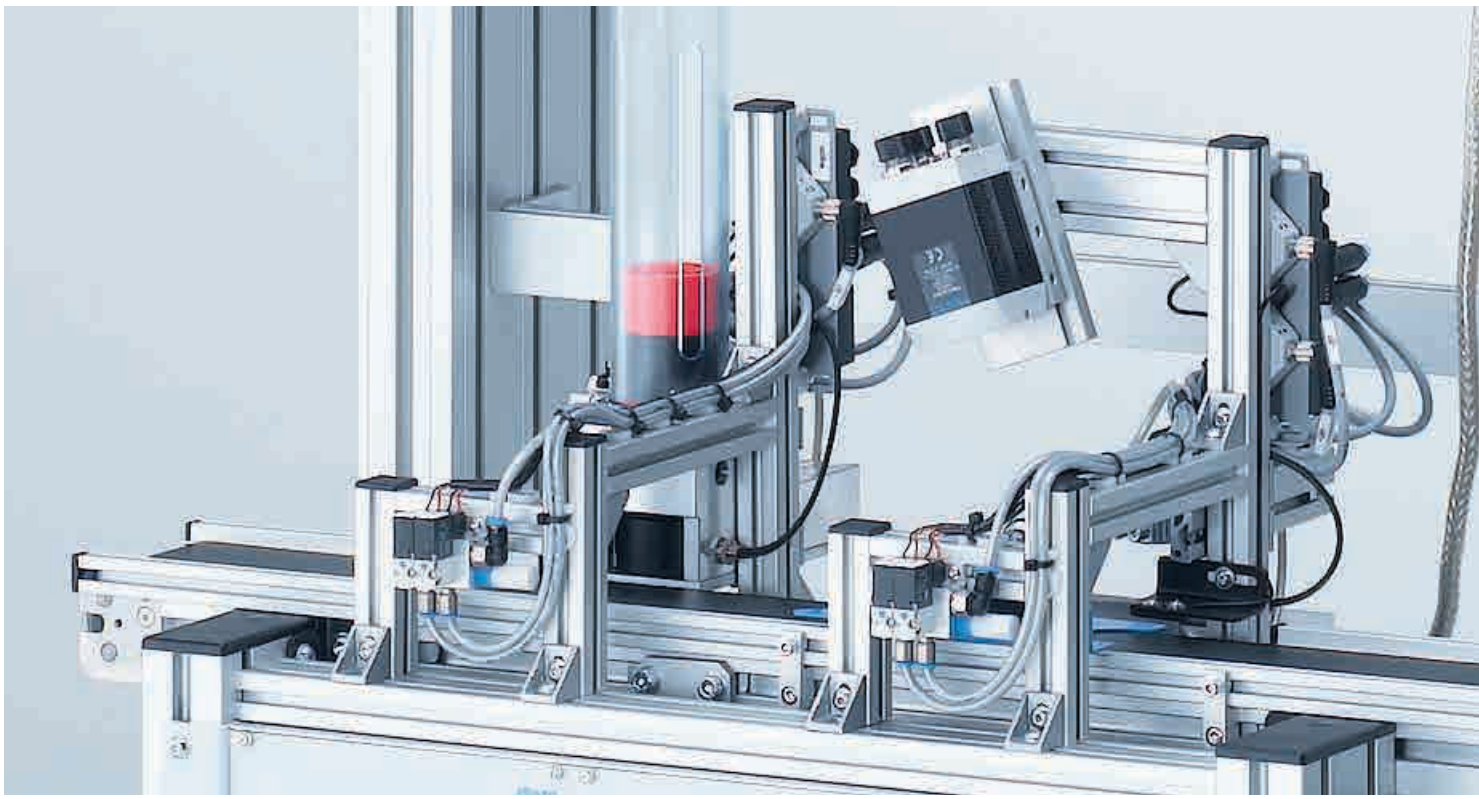

Keeping training moving

The MPS® transfer system has been developed for everyone who wants to make headway with training, be it for the electrical or metal trades or for training technicians and engineers in mechatronics.

The key features of the MPS® transfer system are its innovative technology and the consistent use of industrial components.

Transfer line
The transfer line is made of solid profiles and can be used to transport workpieces or workpiece holders. Top quality, flexible, well thought-out and modular, it is the basis for numerous successful projects.

Drive concept
DC motor, AC motor, servo motor or stepper motor – the belt can be combined with all motor types with just a few simple actions. Professional clutches and toothed belt gearing simulate practical industrial applications while providing optimum training flexibility.

Modules
The individual modules are complete automated units that can easily be integrated into a single transfer line. The MPS® transfer system focuses on topics such as sensors, electrical positioning, handling, assembly, camera inspection, barcode scanning, RFID and many more, making it an ideal platform for forward-looking projects.

Multimedia support

Digital training programs for specific topics relating to the MPS® transfer system facilitate effective training, including the very latest trends in automation technology. The Machine Vision training program provides the perfect introduction to modern industrial image processing.

Just as in industry

Belts play a crucial role in automated production. Products are transported using belts of different widths or even double belts. On the MPS® transfer system, material is transported on a standard industrial belt.

Control
The transfer system is compatible with microcontrollers such as the LOGO! or more complex control systems with a wide variety of configurations. We can produce the ideal control system for you, tailored to your needs.

Workstation
A range of laboratory equipment and a trolley specially tailored to the MPS® transfer system creates the optimum working environment for you.

Control and configure

The choice is yours	Components	Configuration and programming	Advantages
Testing and commissioning with the simulation box			– Easy commissioning of MPS® transfer line – Testing and commissioning for modules
Control with EasyPort		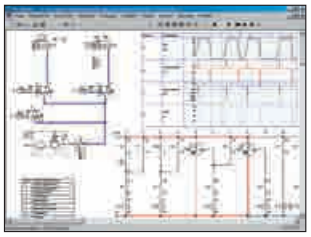	– Control the MPS® transfer line from a PC – Implement simple relay or logistic controllers with FluidSIM® – Control the MPS® transfer line with PLCSIM
Simulation		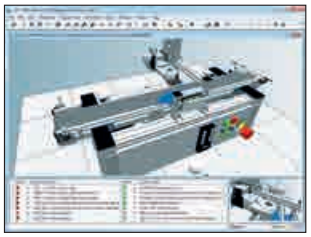	– The comprehensive model library of CIROS® contains 3D process models of selected MPS® transfer system modules. – The models can be controlled straightaway with the integrated virtual S7-PLC. – The powerful error simulation contains various error scenarios including adjustment errors for sensors.
Programming			– Programming using controllers and networking components from market leaders Festo, Siemens, Rockwell and Mitsubishi

We produce the ideal controller for you:
Configure your EduTrainer® PLC to meet your needs ➔ Page 86

System overview

MPS® transfer lines can be flexibly combined and used in a variety of different ways:

In sequence
Simply connecting transfer lines in sequence provides combinations of different sizes.

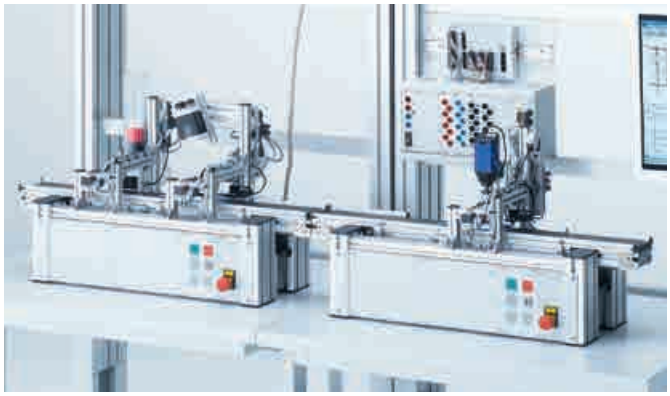

With MPS®
The MPS® transfer lines can also be combined with the MPS® modular production stations from Festo Didactic without the need for additional components. This results in an unmatched variety of systems.

MPS® TS Compact Trainer I4.0
The MPS® transfer system forms the basis for the MPS® TS Compact Trainer I4.0. A CPS (Cyber Physical System) is built using automation components already available. A modern industrial control, the S7-1500, is the heart of this autonomous and highly communicative unit. An RFID read/write system that communicates with the controller via an IO-Link® interface is responsible for exchanging data with the intelligent workpiece.

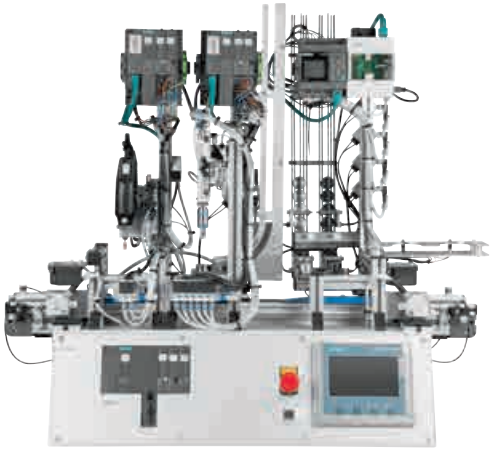

Transfer line

Combine and expand

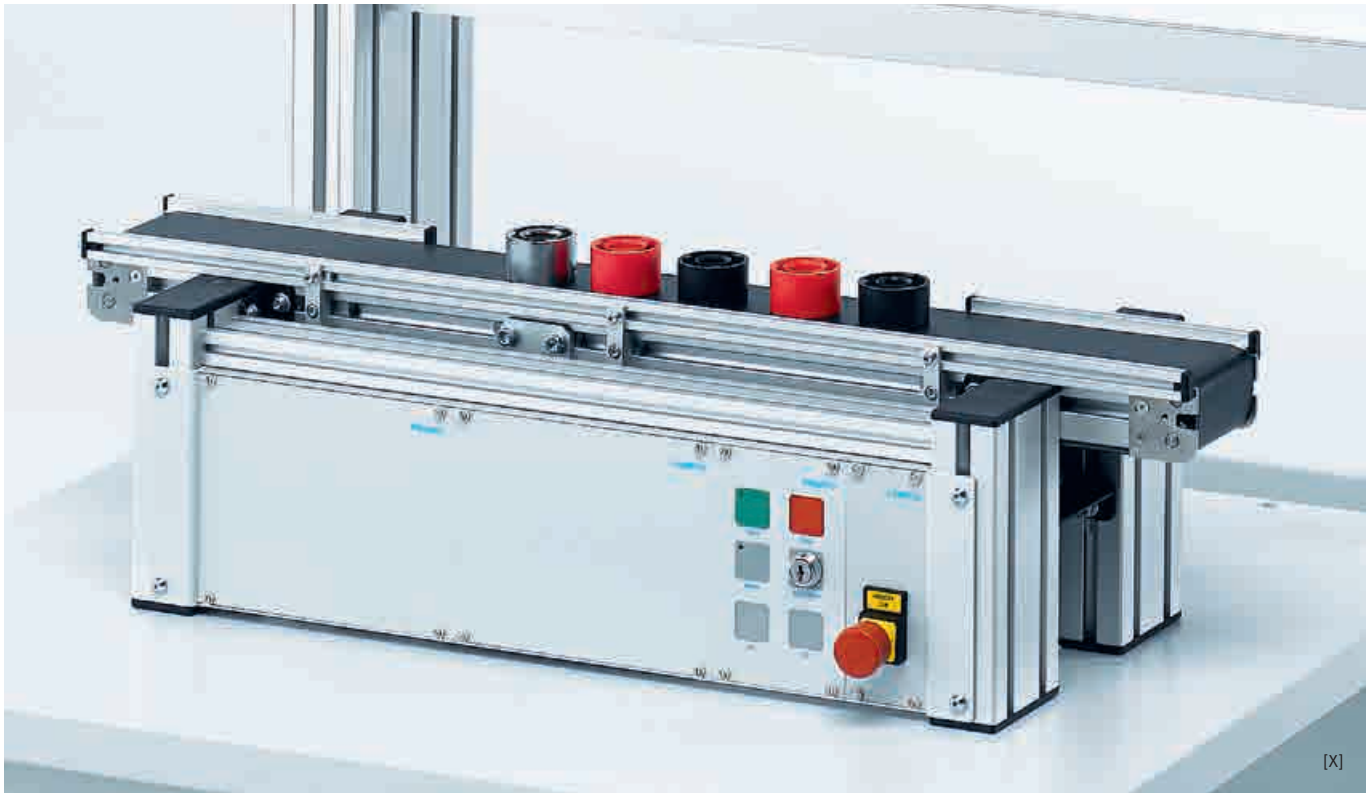

Design and function
The transfer line is the basic component of the MPS® transfer system. It is made up of a belt, drive, controls and sensors and comes fully assembled. The transfer line can be used to transport workpieces or workpiece holders. The transfer line can be fitted with up to two mechatronic modules.

Modular expansion
The transfer line can easily be expanded with different motors, controllers, inverters, control units and connection technologies such as AS-interface or I/O technology.
Each line can be supplemented with a wide range of modules. However, even in "stand alone" mode, the transfer line can cover various important topics in automation technology:
– Familiarization with different drive types
– Use of sensors
– Experimenting with relay and reversing contactors and logic circuits
– Parameterization and commissioning of various drive controllers

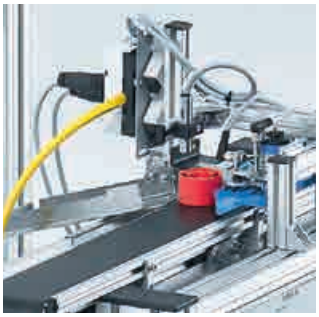

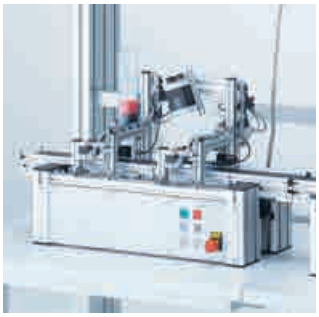

 [X] Illustration includes accessories

MPS transfer line MT DC	**C93100**
MPS transfer line MT DC AS interface	**C93101**
MPS transfer line MT AC	**C93102**
MPS transfer line MT AC400	**C93104**

Accessories, also order:

"Cylinder bodies" workpiece set	C94407
EduTrainer Universal A4 rack with SIMATIC S7-313C	567098
Sinamics G120 EduTrainer ➔ www.festo-didactic.com	
MicroMaster 420 EduTrainer	8036812
Cable set to connect MM420 to transfer line	C94419
MPS Transfer System Frequency Converter MM420: Workbook ➔ Page 64	

Scope of delivery

MPS® transfer line MT DC:
– DC motor
– Control panel
– Four-quadrant drive controller
– Optical sensors at beginning and end of belt

MPS® transfer line MT DC AS-interface:
– DC motor
– AS-interface control panel
– AS-interface drive controller
– Optical sensors at beginning and end of belt

MPS® transfer line MT AC:
– AC motor
– Control panel
– Optical sensors at beginning and end of belt

MPS® transfer line MT AC400:
– AC motor for star-delta circuit
– Control panel
– Optical sensors at beginning and end of belt

Other configurations and components on request.

Recommended learning media

– WBT Sensor technology 2 – Sensors for object detection

– WBT LOGO! Training
– WBT Actuators – DC motor
– WBT Safety engineering
– WBT Machine Vision
– Mechatronics Assistant

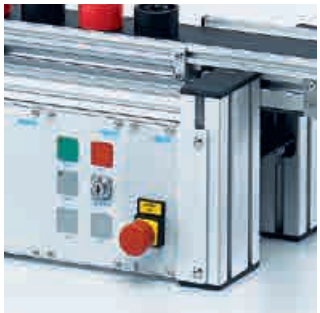

Individual equipment
We equip the 19" frame with various operation and control components based on your preferences. Expansions and additions are possible at any time.

Intelligent connection technology
The design of the system connections enables all additional modules to be easily connected to the transfer line. We also provide additional free terminals for your own projects.

Clockwise or anticlockwise rotation
The four-quadrant drive controller allows both. The controller is actuated directly using I/Os or the AS-interface. The buttons on the controller enable the connected drive to be controlled manually during commissioning, maintenance or diagnostics.

Variable sensors
The sensors at the beginning and end of the belt take the form of fiber optic through-beam sensors. The mounts for the fiber optics can easily be fixed to the belt profile and adjusted depending on the application. A variety of different sensors can also be added.

Transfer line
Modules

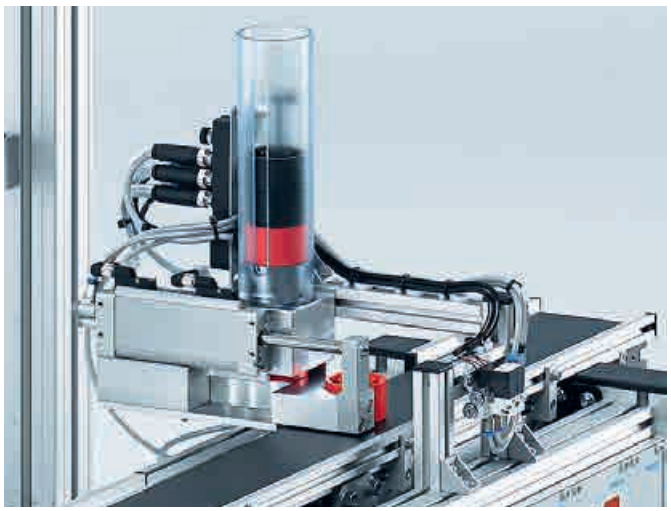

Stacking magazine module

The module separates workpieces from a magazine.

The module is completely assembled with a pneumatic cylinder with end-position sensors, a retro-reflective sensor for magazine level monitoring, valve terminal and electrical connection block.

Complete with connecting cable.

Transfer line and workpieces are not included.

Stacking magazine, I/O	**C93200**
Stacking magazine, AS-Interface	**C93201**
Stacking magazine, PROFIBUS-DP	**C93202**

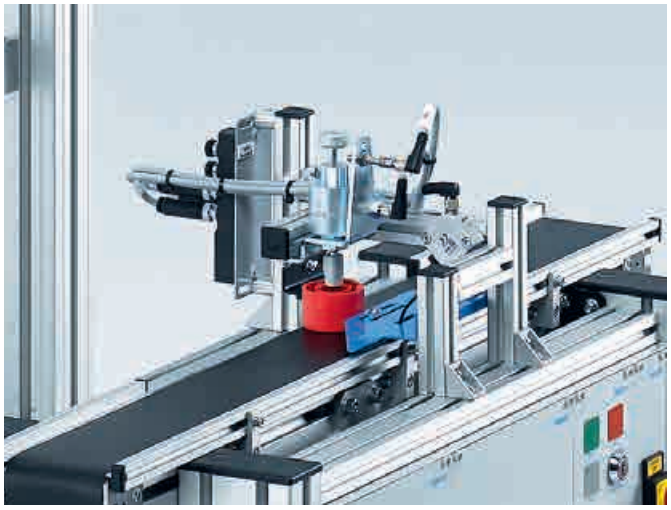

Drill hole monitoring module

The module monitors whether there is a drill hole in workpieces. To do this, a test pin is inserted into the workpiece (with a solenoid). An inductive proximity sensor monitors if the test pin has reached its end position.

The module is completely assembled with a connection block.

Complete with connecting cable.

Transfer line and workpieces are not included.

Drill hole monitoring, I/O	**C93203**
Drill hole monitoring, AS-Interface	**C93204**
Drill hole monitoring, PROFIBUS-DP	**C93205**

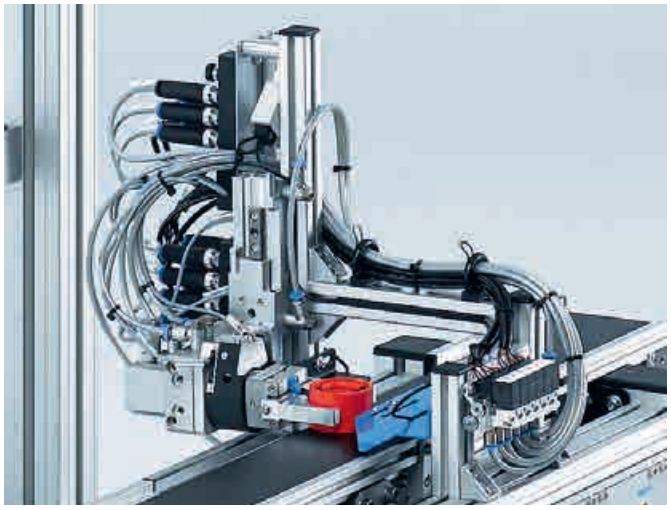

Turning module

The module turns workpieces. The workpieces on the conveyor belt are detected by an optical diffuse sensor. A linear slide, swivel cylinder and linear gripper are used in the module.

The module is completely assembled with a valve terminal and two electrical connection blocks.

Complete with connecting cable.

Transfer line and workpieces are not included.

Also order:
MPS® Transfer System Turning Module: Workbook ➔ Page 64

Turning, I/O	**C93206**
Turning, AS-Interface	**C93207**
Turning, PROFIBUS-DP	**C93208**

Drilling module

The module drills workpieces (symbolically). The workpieces on the conveyor belt are detected by an optical diffuse sensor. The drilling machine is moved by a pneumatic linear slide.

The module is completely assembled with a valve terminal and an electrical connection block.

Complete with connecting cable.

Transfer line and workpieces are not included.

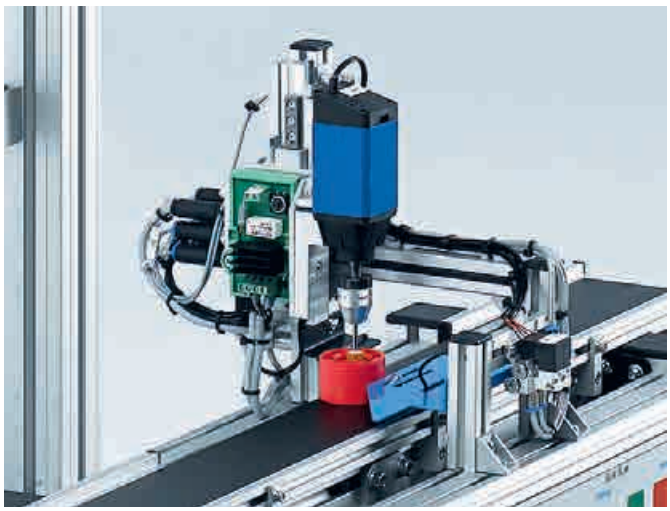

Drilling, I/O	**C93209**
Drilling, AS-Interface	**C93210**
Drilling, PROFIBUS-DP	**C93211**

Measuring module, analog

The module checks the height of workpieces. The workpieces on the conveyor belt are detected by an optical diffuse sensor. An analog laser distance sensor is mounted above the workpiece. The measuring range of the sensor is 0 – 30 mm with 0 – 10 V analog output and 2 PNP switching outputs. The switching outputs can be freely configured using the teach-in function.

The module is completely assembled with an electrical connection block.

Complete with connecting cable.

Transfer line and workpieces are not included.

Also order:
MPS® Transfer System Measuring Module, analog: Workbook
➔ Page 64

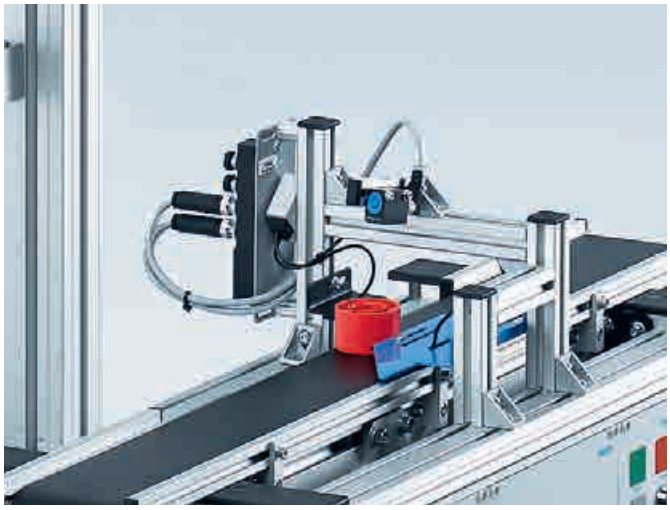

Measuring, analog, I/O	**C93212**
Measuring, analog, AS-Interface	**C93213**
Measuring, analog, PROFIBUS-DP	**C93214**

Ejection module, pneumatic

The module sorts workpieces onto a slide. The workpieces on the conveyor belt are detected by an optical diffuse sensor. A second sensor (capacitive) above the workpiece detects if the workpiece needs to be sorted onto the slide. Sorting is carried out using a slide gate, which is actuated by a pneumatic linear cylinder.

The module is completely assembled with a valve terminal and an electrical connection block.

Complete with connecting cable.

Transfer line and workpieces are not included.

Also order:
MPS® Transfer System Ejection Module, pneumatic: Workbook
➔ Page 64

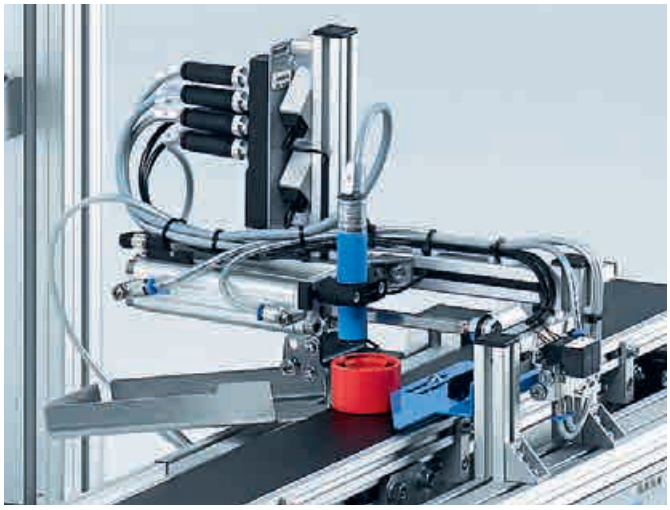

Ejection, pneumatic, I/O	**C93221**
Ejection, pneumatic, AS-Interface	**C93222**
Ejection, pneumatic, PROFIBUS-DP	**C93223**

Transfer line
Modules

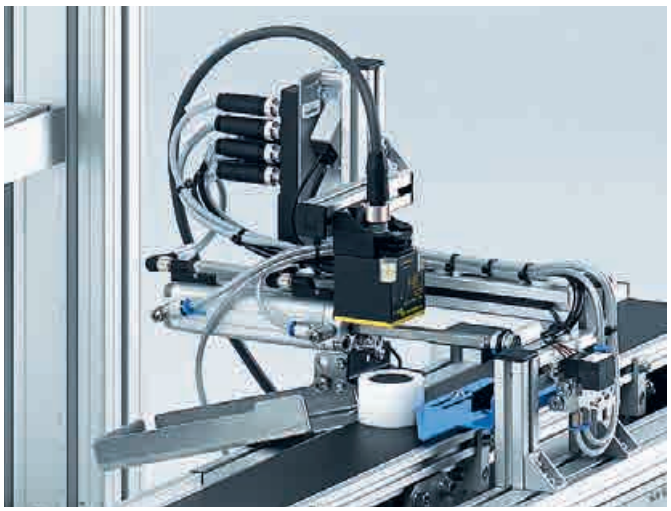

RFID module

The module sorts workpieces onto a slide. The workpieces on the conveyor belt are detected by an optical diffuse sensor. A read-write head is used to read and check the data from the RFID chip on the workpiece. New data, based on various criteria, can be ascribed to the workpieces, which are then sorted onto the slide or transported further on the belt. Sorting is carried out using slide gate, which is actuated by a pneumatic linear cylinder.

The module is completely assembled with a valve terminal and an electrical connection block.

Complete with connecting cable and PROFIBUS DP interface for the RFID element.

Transfer line and workpieces are not included.

RFID, PROFIBUS-DP **C93224**

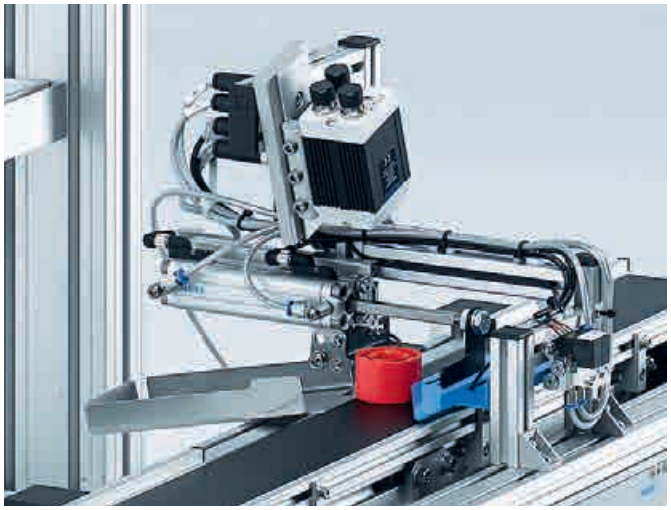

Inspection camera module

The module sorts workpieces onto a slide. An intelligent color camera with integrated lighting detects the workpieces on the conveyor belt and sorts them onto the slide depending on various criteria. Sorting is carried out using a slide gate, which is actuated by a pneumatic linear cylinder.

The module is completely assembled with a valve terminal and an electrical connection block.

Complete with connecting cable, intelligent color camera system and image processing software.

Transfer line and workpieces are not included.

Inspection camera **C93225**

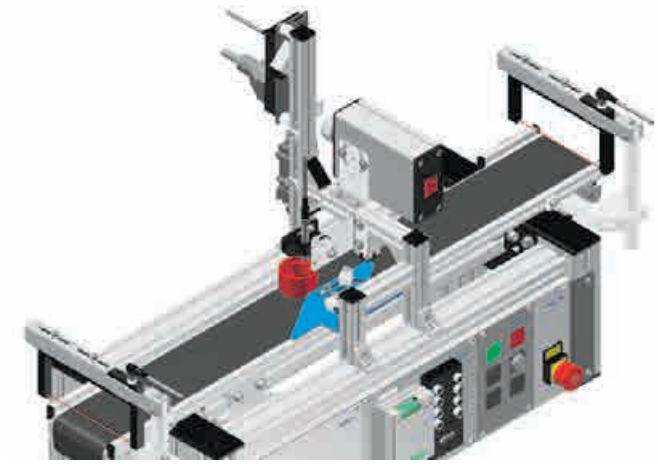

Detection module

The module checks the workpiece properties. The workpieces are detected on the conveyor belt by an optical diffuse sensor. Three additional sensors (optical, inductive) are attached above the workpiece in order to detect the workpiece properties. The evaluation of the workpiece information can be displayed via a segment display.

Control topics:
– Linking of information
– Coding of information
– BCD coding
– Control of a segment display

Transfer line and workpieces are not included in the scope of delivery.

Detection **C93257**

Insertion module

The module consists of a pneumatic 2-axis handling system and inserts round metal materials into the main body. For this purpose, the handling device is equipped with a pneumatic gripper. The workpieces are detected on the conveyor belt by an optical diffuse sensor. In addition, the module is equipped with end-position switches on the linear slides and a pressure switch.

The module is completely assembled with valve terminal and connection block.

Transfer line and workpieces are not included in the scope of delivery.

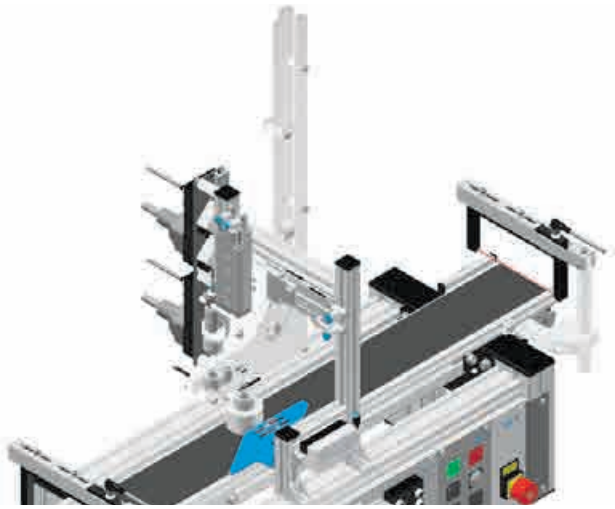

Insertion, I/O	**C93263**
Insertion, PROFIBUS-DP	**C93265**
Insertion, PROFINET	**C93269**

Press-fitting module

The press-fitting module consists of a pneumatic cylinder that presses in the materials used. The workpieces are detected on the conveyor belt by an optical diffuse sensor.

The module is completely assembled with valve terminal and connection block.

Transfer line and workpieces are not included in the scope of delivery.

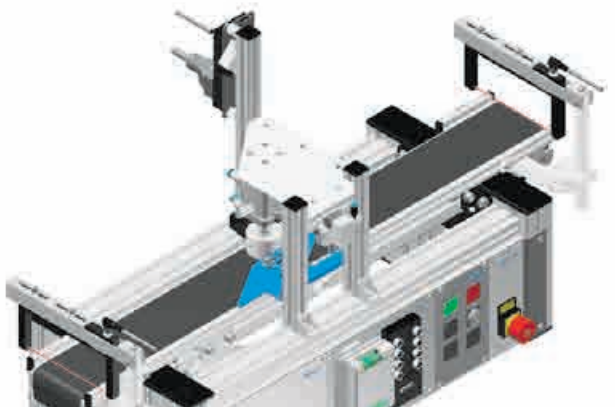

Press-fitting, I/O	**C93266**
Press-fitting, PROFIBUS-DP	**C93268**
Press-fitting, PROFINET	**C93270**

Automatic warehouse module

In the automatic warehouse module, up to 20 stock locations can be filled with workpieces. The handling device is equipped with an angle gripper. The workpieces are detected on the conveyor belt by an optical light barrier, the belt is stopped and the workpiece is brought from there to the appropriate storage location position by the gripper.

The module is completely assembled with valve terminal and connection block.

Transfer line and workpieces are not included in the scope of delivery.

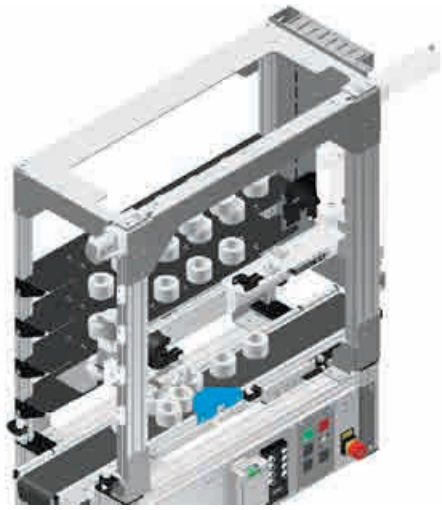

Automatic warehouse, I/O	**C93256**
Automatic warehouse, PROFIBUS-DP	**C93258**
Automatic warehouse, PROFINET	**C93285**

MPS® Stations

Mechatronic systems for world champions

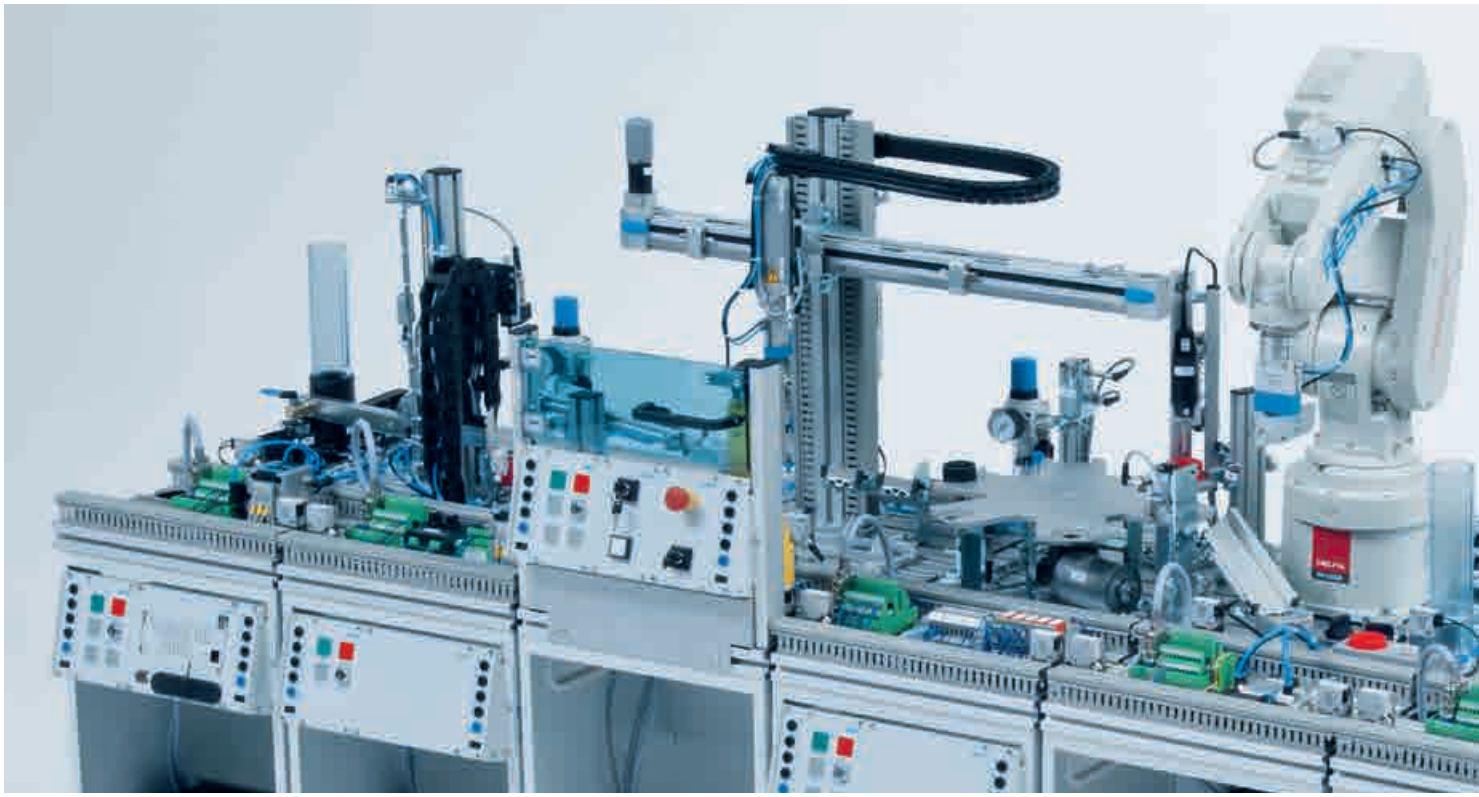

The MPS® makes history

Since 1991, the stations from the modular production system MPS® have been the "sporting equipment" at the mechatronics world championships. In national and international competitions, MPS® has demonstrated that its concept, the stations and control systems and its functionality involved provide exactly those features that characterize automated production throughout the world: integrating mechanical systems, electrical engineering and IT to form mechatronics.

Anyone who trains using MPS® can be confident that numerous companies, schools and universities all over the world are doing exactly the same. The stations in the modular production system are the origin and role model for almost all mechatronic training systems.

The MPS® is the original.

Each station has its own focus
Two stations are sufficient to represent a simple, industry like process for basic training in automation technology: distributing and sorting.

This simplest of all combinations provides numerous basic functions of automated production: separating, feeding, identifying, sorting. Each additional station adds new learning objectives and each station can be used to achieve a particular objective. This means that the transfer of knowledge to the actual operation of modern automated production is as efficient as possible.

Combine: As you like it!
All stations can be combined with others to create systems. This adds learning content and increases the flow of material and information. It is up to you whether you network the stations or operate them in stand-alone mode with a separate PLC.

Combination with other processes is also possible, e.g. with the MPS® transfer system or the MPS® PA stations.

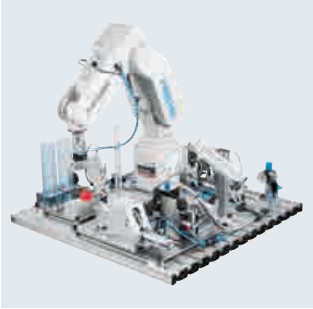

State-of-the-art: With a new robot
As a part of the system, the MPS® Robot station is used for the most mechatronically advanced process: robot-supported assembly. The new RV-2FB represents the wide range of advancement options within the MPS®, as a 6-axis robot with articulated arm kinematics ➔ Page 226.

3D: Like real life

The MPS® stations provide plenty of material for varied training. But in practice not every station is always available.

That's why all MPS® stations are also available as a simulation. The virtual stations in CIROS® behave just like the real stations. There is no difference in commissioning and troubleshooting. The same PLC can be used for control.

The virtual CIROS® stations enable you to:
- add more functions of an automated system to your learning scenario
- provide multiple learners with the same stations at the same time
- design more individual training without having access to all real stations

CIROS® ➔ Pages 44 – 49

Sensitive: Safety modules
Hardly any issue affects so many employees in a company as health and safety. Emergency stop, safety curtains, safety doors and failsafe control are all part of a system made up of MPS® stations.

Manufacturing and assembly
What is important? If simple handling tasks are sufficient for your learning scenario, the workpiece set with bodies of various materials can be used. If you want handling to involve simple assembly, the bodies with measuring instruments or containers with covers are ideal. For complex assembly with robots, a symbolic single-acting cylinder provides just the right challenges. If you want to program a microcontroller system, MPS® offers the EasyKit as the perfect starter package.

Choice of PLC
The PLC normally controls the individual stations, unless you are using the virtual mini control system in FluidSIM® for example.

As for the PLC, we recommend an EduTrainer® Universal. We will fit the PLC of your choice, as well as fieldbus components if required. The advantage of the EduTrainers® in the MPS® Station is clear: you can remove the control and use it for other processes or in a workbench.

worldskills

Since 1991, the modular production system MPS® has been the competition platform for the mechatronics world championships.

From modules to systems

The right combination for successful learning

MPS® offers the right products for every requirement

No matter whether you require individual components to expand existing systems, a combination of several modules on one station or carriage or a complete system: the modular production system MPS® with its many possible combinations allows the right system to be assembled for every teaching requirement.

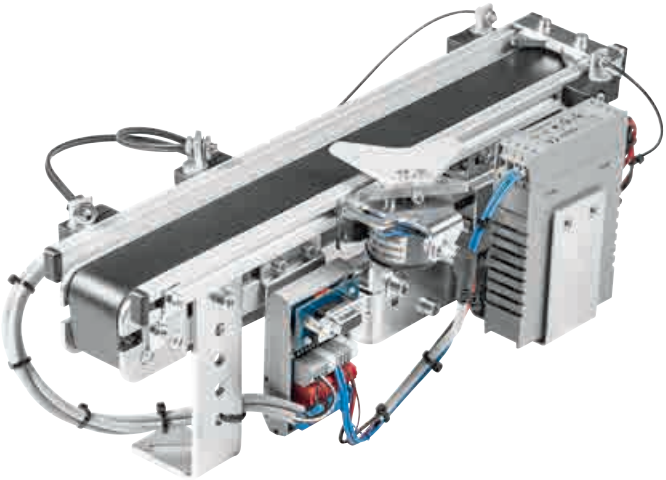

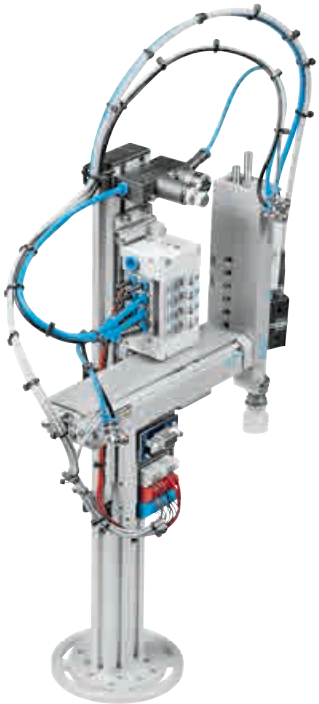

Conveyor module

The Conveyor module is intended for mounting on a profile plate, profile foot or slotted mounting plate with freely positionable DC motor. It is suitable for transporting and separating workpieces with a diameter of 40 mm (e.g. “Cylinder bodies” or “Cylinder for assembly” workpiece sets). The module is supplied fully assembled.

Pick&Place module

The Pick&Place module is a universal, 2-axis handling device for Pick&Place tasks. The position of the limit switches, as well as their mounting position and height, can be adjusted on this module. The module is supplied complete with a vacuum generator, pressure switch, vacuum filter and suction cup, valve terminal, pressure limiter and electrical interface. In another version, a parallel gripper is fitted instead of vacuum technology.

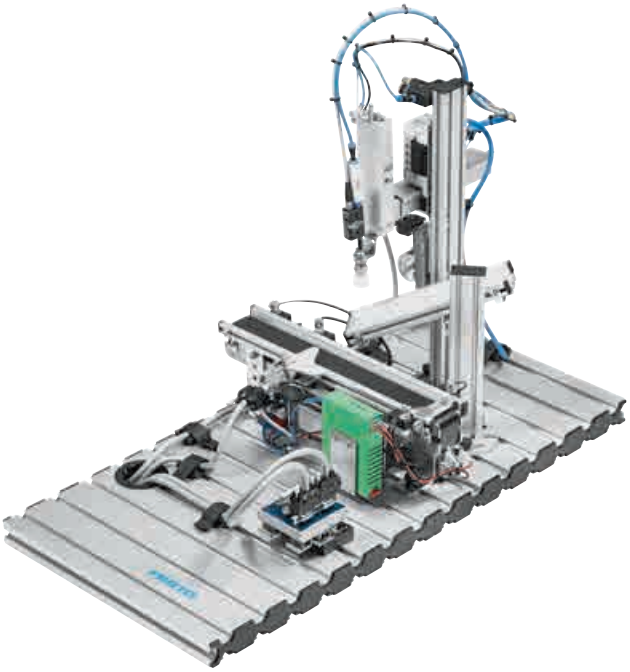

Pick&Place station

The Pick&Place station is equipped with a two-axis Pick&Place module and a Conveyor module. Optical diffuse sensors or light barriers detect the workpiece housing placed onto the conveyor. The conveyor transports the workpiece to the electric feed separator. The Pick&Place module picks up a workpiece insert from the slide and places it on the workpiece housing. The complete workpiece (housing and insert) is released by the feed separator and transported to the end of the conveyor.

Pick&Place station including trolley

Compact and mobile – the station is easy to mount on the trolley. Appropriate passages in the side walls and backwalls enable orderly routing of cables. The symmetrical design of the trolley means that there are mounting options on both sides for the control panel, the intermediate bottom and for drawers. A lifting column can be integrated in the center of the trolley to facilitate ergonomic work on the profile plate. There is space for the assembly board for the electrical connections and the PLC rack on both sides of the trolley. The profiles for DIN A4 mounting allow additional EduTrainer® units to be used on the trolley. An optional attachable door protects the equipment inside.

The modular basis

Connectivity in all directions

One module – Many options!

Thanks to the great modularity and the defined interfaces, different learning scenarios can be designed on one module by using additional components.

– Get to know one module and connect to a control with 4 mm lines.
– Connect this module to a control with open wiring and terminal block.
– Connect this module to a control with a plug connector and start programming immediately.
– Connect this module to a bus coupler with a plug connector and start with network technology immediately.

No matter where you start, the path is always right.

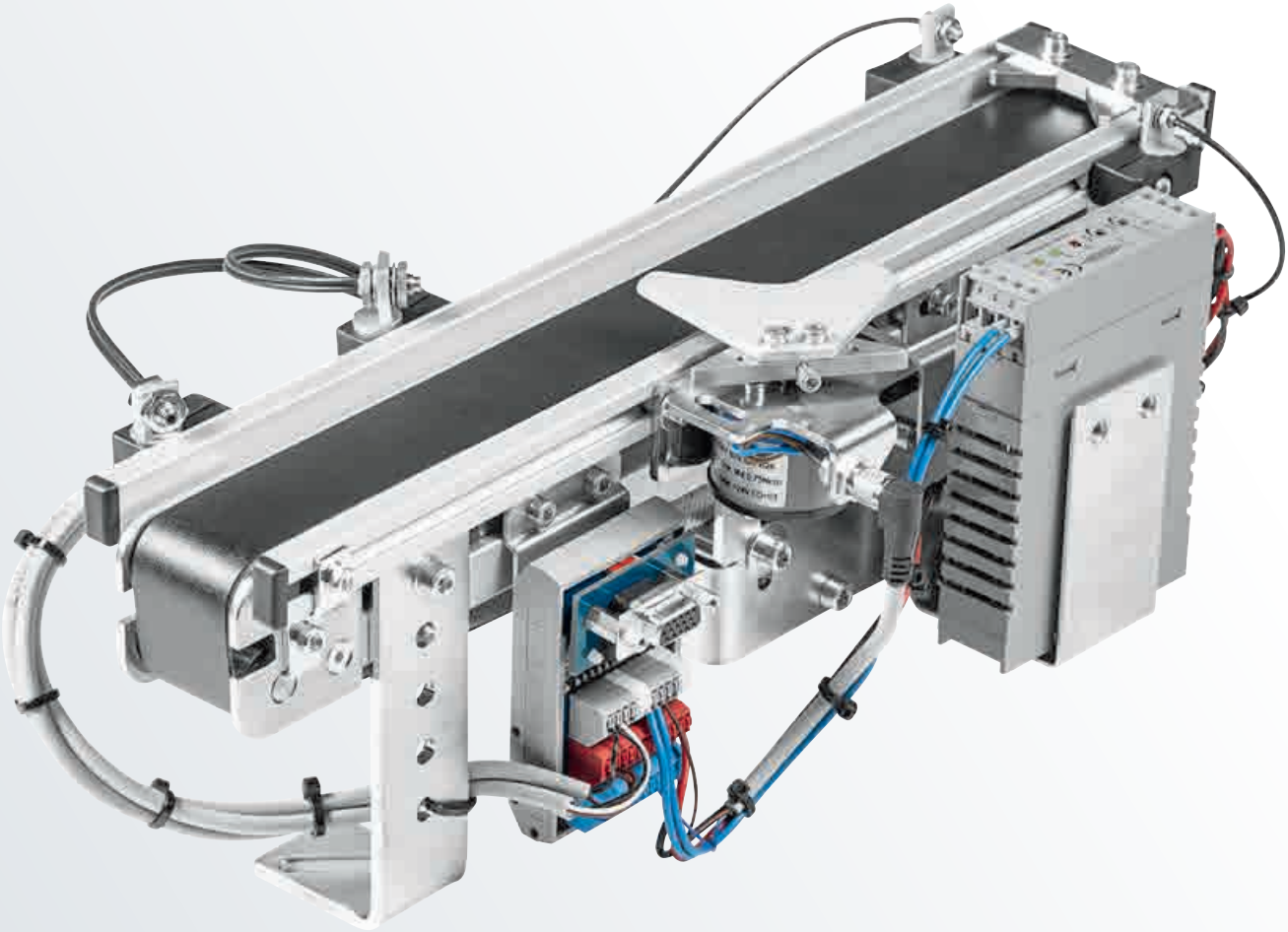

Well connected with the bus node CTEU for valve terminals and the IO-Link® DA Interface

The fieldbus node supports fieldbus-capable modules. The bus node module is therefore a low-cost means of exploring the extensive world of fieldbus protocols, including CANopen, PROFIBUS and DeviceNet®. This communication interface is based on the Festo "I-Port" as a universal M12 connection. It can be equipped with the new bus modules CTEU or configured with IO-Link®.

The interface box allows safe wiring using 4 mm safety plugs

The wired sensors and actuators in the module are connected to a defined interface. These are connected via the interface box to 4 mm safety socket contacts. This applies both to digital and analog signals and the power supply.

Fast commissioning thanks to a uniform interface

A uniform interface allows all modules and components to be connected to the modular system. The defined interface (I/O interface) helps ensure fast system commissioning.

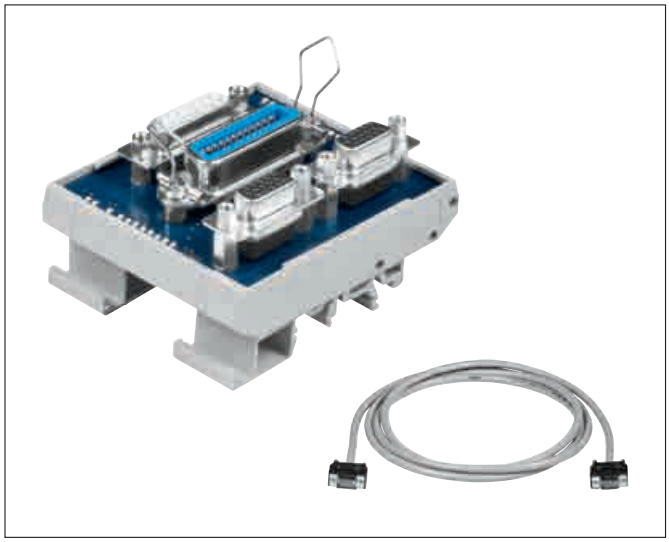

The I/O terminal – The central unit of the MPS® SysLink concept

It is used to wire eight digital inputs and eight digital outputs which are connected to a socket contact. Contact is established via spring-loaded terminals. LEDs are included on the input and output terminals which make it easy to monitor the switching status and enable systematic troubleshooting. The interface can be mounted on an H-rail.

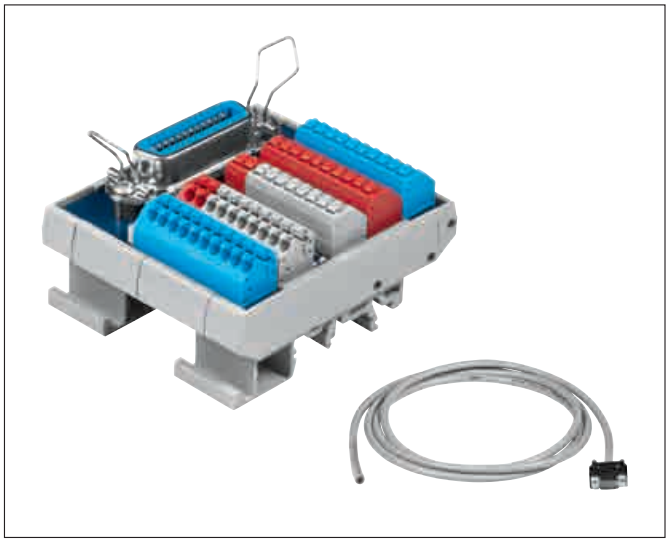

Short description and possible combinations of the stations

Station	Function	Modules	Topics	PLC required (Contol Panel included)
Distributing/Conveyor	Distributes and transports the workpieces	– Stacking magazine – Belt	– Electropneumatics – Distribution – Transporting	– 16 DIN/16 DOUT
Measuring	Measures the height of the workpieces outside the process	– Rotating and lifting – Belt	– Quality inspection – Analog value – Transporting	– 16 DIN/16 DOUT – (1 IN)
Pick&Place	Transports and assembles the workpieces	– Pick&Place – Belt	– Vacuum – Handling – Transporting	– 16 DIN/16 DOUT
Separating	Transports the workpieces in different directions	– 2x Belts	– Test workpiece – Analog value – Transporting	– 16 DIN/16 DOUT – (1 IN)
Sorting	Sorts the workpieces to three different slides	– Detection – Belt	– Sensors – Classification – Logistics – Transporting	– 16 DIN/16 DOUT
Storage	Distributes the workpieces in six different levels with eight positions per level	– Detection – Planar surface gantry with gripper	– Embedded Controller – Logistics – Sensors	– 16 DIN/16 DOUT
Robot with modules	Assembles a cylinder	– Robot – Robot handling – Robot assembly	– Robotics – Handling – Assembling	No SPS (Robot control with RIA box)
Programming	Programs the microcontroller	– Belt – Programming	– Bit communication – Embedded controller – Programming microcontroller	– 16 DIN/16 DOUT
Packaging	Packages the workpieces	– Belt – Handling stepper – Packaging	– Pneumatic control system – Stepper motor – Handling	– 24 DIN/24 DOUT

Station	Downstream station	Distributing/ Conveyor	Pick&Place	Separating	Sorting	Measuring	Storage	Packaging	Programming	Robot	Handling
Preceding station											
Distributing/Conveyor		●	●	●	●	●	●	●	●	●	●
Pick&Place		●		●	●	●	●	●			●
Separating		●	●	●	●	●	●	●	●	●	●
Sorting											
Measuring		●	●	●	●	●	●	●	●	●	●
Storage		●	●	●	●	●	●	●	●	●	
Packaging											
Programming		●		●	●	●	●	●	●		●
Robot		●		●	●	●	●	●			●
Handling		●	●	●		●		●	●		●

With these possible combinations, the PLC sample programs do not have to be adapted.

Possible MPS® Systems

Stations
– Distributing
– Sorting

Topics:
– Distributing
– Conveying
– Detection

Stations
– Distributing
– Measuring
– Assembly
– Sorting

Topics:
– Distributing
– Conveying
– Detection
– Pick&Place
– Vacuum
– Separating
– Joining
– Measured data acquisition
– Statistical measurement control
– Identification of defective parts

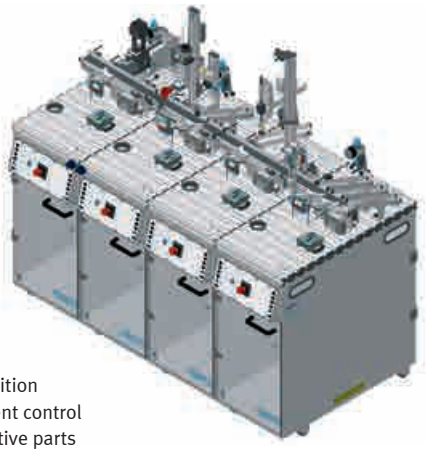

Stations
– Distributing
– Measuring
– Sorting

Topics:
– Distributing
– Conveying
– Detection
– Pick&Place
– Separating
– Measured data acquisition
– Statistical measurement control
– Identification of defective parts

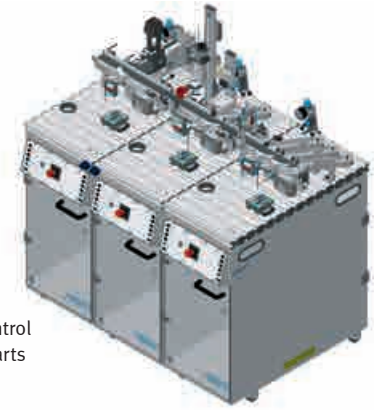

Stations
– Distributing
– Measuring
– Assembly
– Storing

Topics:
– Distributing
– Conveying
– Detection
– Pick&Place
– Vacuum
– Separating
– Joining
– Measured data acquisition
– Statistical measurement control
– Identification of defective parts
– Storage technologies

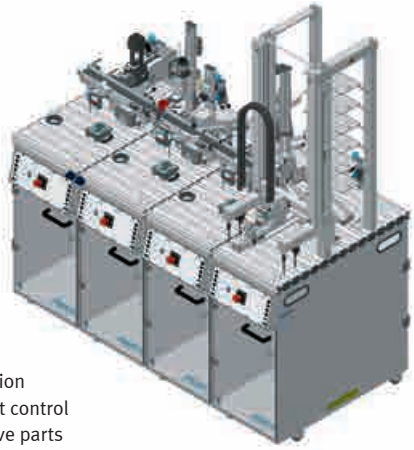

Stations
– Distributing
– Robot stations
  with modules
– Sorting

Topics:
– Distributing
– Conveying
– Detection
– Robotics
– Separating
– Joining

Stations
– Distributing
– Separating with Pick&Place
– PG module (joining)
– Sorting and rear
  distribution of a
  microcontroller
– Programming

Topics:
– Distributing
– Conveying
– Detection
– Pick&Place
– Parallel grippers
– Joining
– Automated programming

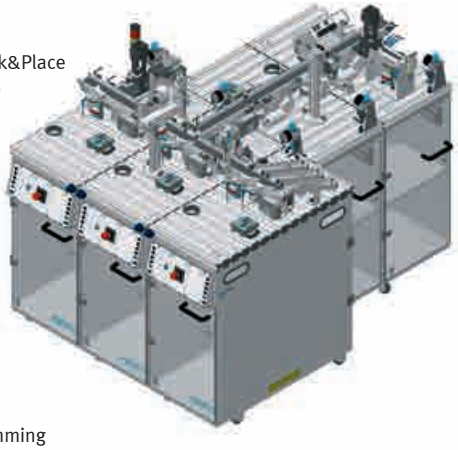

The stations in the Modular Production System at a glance

A production line in a factory can be made up of individual production cells. Each cell has a specific function in the process (distribution, testing, processing, handling, assembly, storage). You can select an application or process that meets your requirements from a range of individual stations.

By effectively combining individual stations, you can assemble your production system.

Learn about the functions and training aims of the individual stations as well as their possible combinations on the following pages.

Make more of your potential

Either:
Simple to set up/commission yourself:
– Mount control console to the trolley with 2 screws
– Place EduTrainer® Universal in trolley
– Connect the EduTrainer® Universal to the control console and the station using our universal SysLink plug connector
– ... finished!

Or:
MPS® commissioning service
On request, we can also commission systems for you – particularly in the case of larger systems – to ensure that your training projects run smoothly right from the start.

Additional services
➔ Pages 276 – 277

Distributing station

Processing station

Handling station, pneumatic

Handling station, electrical

Fluidic muscle press station

Punching station

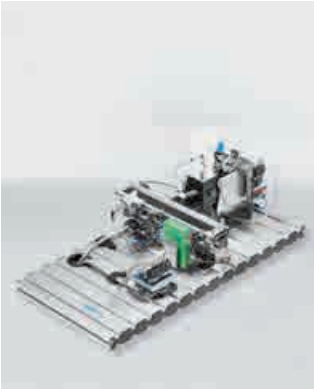

Distributing/Conveyor station

Measuring station

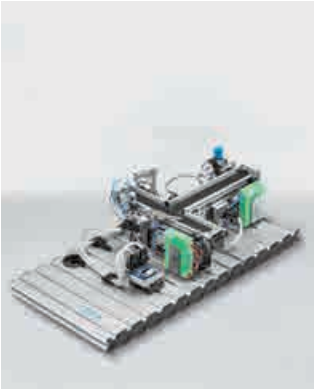

Separating station

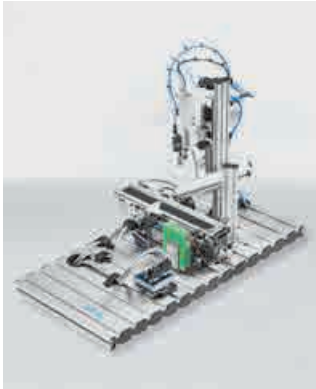

Pick&Place station

Robot station

Robot station with MPS® modules

Storing station

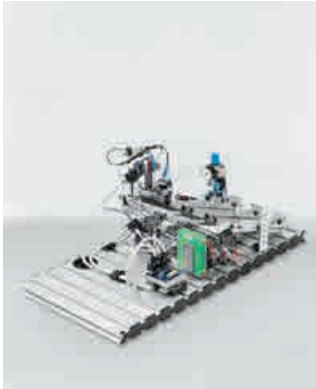

Sorting station

Programming station

Packaging station

Distributing/Conveyor station

Start-up

New

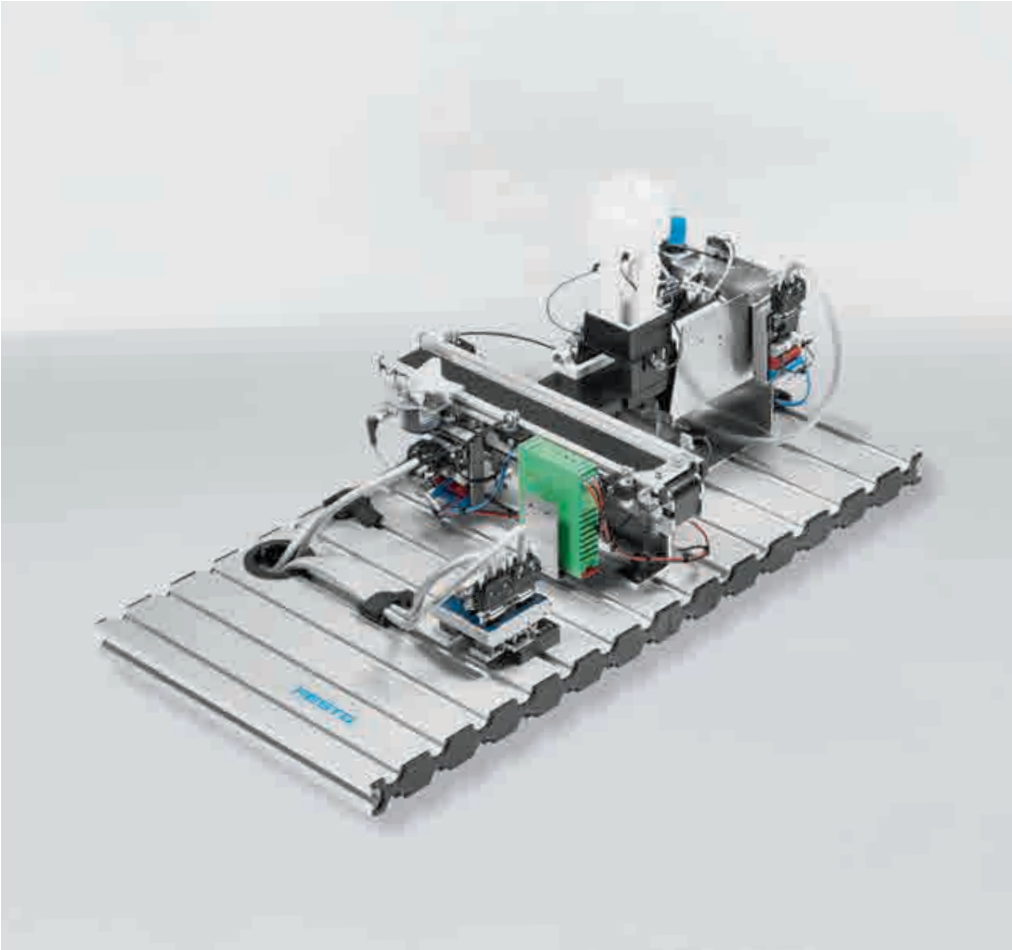

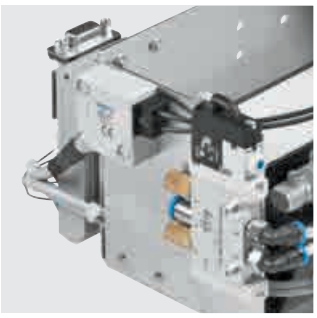

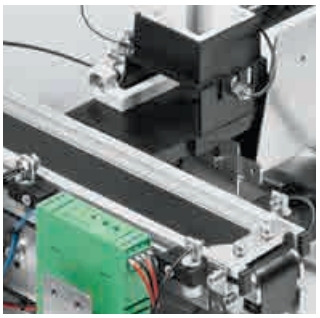

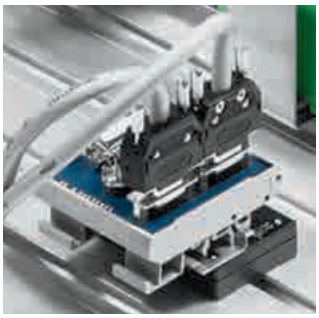

Function
The Distributing/Conveyor station separates workpieces stored in the magazine tube of the stacking magazine. A double-acting cylinder pushes the workpieces out one at a time. The Conveyor module transports the workpiece to the right or left. If required, the workpiece can be stopped and separated on the conveyor.

Topic: Separating
Both simple and complex programming topics are communicated using the simple magazine structure. Different workpieces can be used in the MPS® Stacking magazine module.

Topic: Conveying
The MPS® Conveyor module offers a range of training subjects including clockwise/anticlockwise rotation, stopping, separating and opto-electrical sensors.

Distributing/Conveyor station, mounted	**8034566**

Additional equipment, also order:

MPS trolley, 700 x 350	8033590
Control console, SysLink	195764
EduTrainer Universal ➔ Pages 87 – 95	

Recommended accessories:

Simulation box, digital	170643
PA workpiece set	554301

The most important components at a glance:

1x Aluminum profile plate, 700 x 350 mm, with cable guide	170395
1x Conveyor module, 350 x 40 mm, DC	8032692
1x Stacking magazine module, without workpiece holder	8032172
1x Start-up valve with filter control valve	540691
1x Cable holder with hook-and-loop fastener (pack of 10)	8034300
1x C-interface	8025738
1x Quick-Fix clamping adapter	8026327

Training content
- Belt control
- Reading circuit diagrams
- Buffering and separating
- Basic principles of pneumatics
- Sensor technology: magnetic limit switches, opto-electrical sensors
- Connecting tubing and wiring

Technical data
- Operating pressure: 600 kPa (6 bar)
- Power supply: 24 V DC
- Square/round workpiece dimensions: max. 40 mm
- 6 digital sensors
- 4 digital actuators

Recommended training media
- CIROS®
- WBT Actuators – DC motor
- WBT Pneumatics
- WBT Electropneumatics
- WBT GRAFCET
- FluidSIM® Pneumatics design and simulation program
- Textbook Basic principles of pneumatics and electropneumatics
- Basic level workbook MPS® conveyor module, PLC programming
- Tec2Screen® Courses – MPS® Stacking Magazine module
  - Commissioning
  - Logic programming
- Tec2Screen® Courses – MPS® Conveyor Module
  - Commissioning
  - Logic programming

Distributing/Conveyor station with additional equipment

1

Light barrier
The light barrier consists of a sensor with a cable and mounting bracket for a profile or profile plate and a fiber-optic cable. Available in three designs.

1 with holder	196960
without holder	532935
with sleeve	526205

Valve slice
5/2-way single solenoid valve, including 0.5 m valve cable.

Order no.	3035724

Measuring station

Quality inspection

New

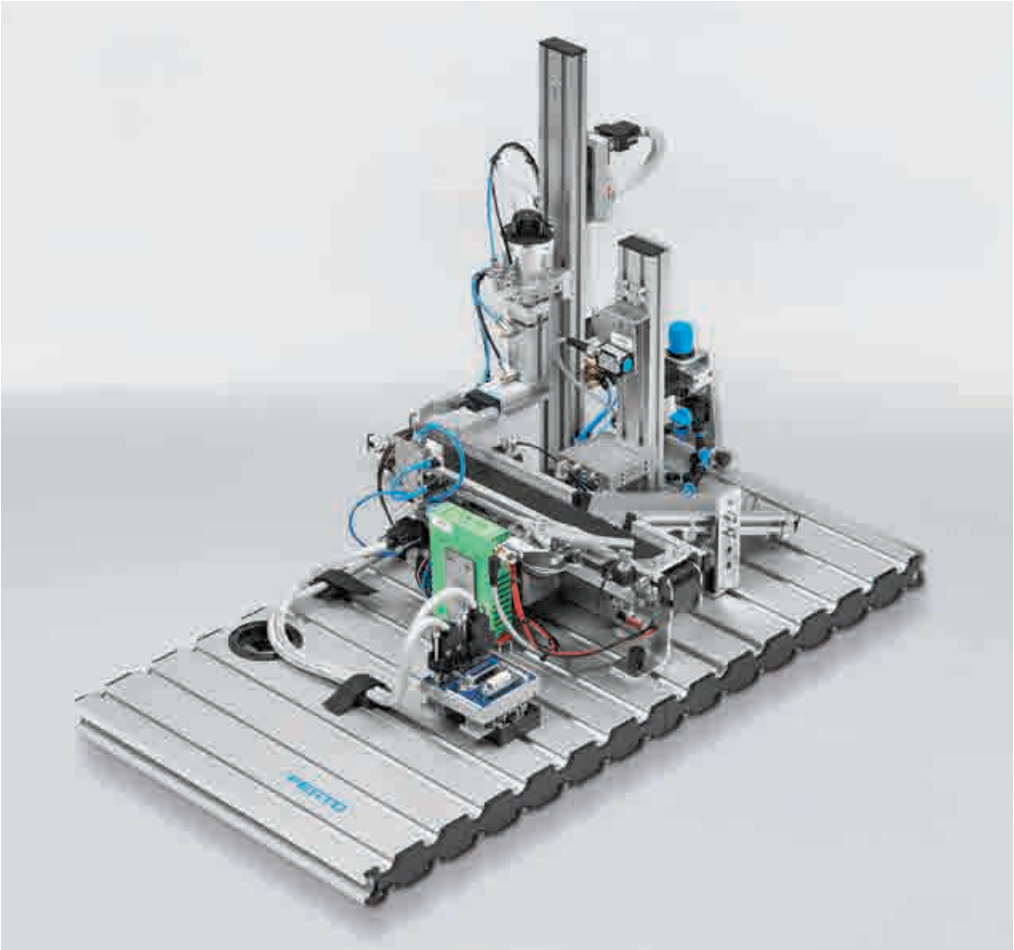

Function
The Measuring station picks workpieces out of the running process in order to place them on a measuring table and determine their height. The belt transports the workpieces to the rotary/lifting module. The workpiece is placed under the diffuse sensor by a lifting and swiveling motion. Then it is returned to the process. Depending on the result of the measurement, the workpiece is separated out onto a slide by an electric quarter-turn actuator or is moved to the end of the belt. Optoelectrical sensors with fiber-optic cables monitor the material flow on the belt. The belt can be operated in both directions.

Topic: Analog and digital
The diffuse sensor supplies both an analog and a binary output signal. This facilitates different training levels. The binary switching output can be adapted to the measurement requirement by means of a simple teach-in process.

Topic: Pneumatic drives
The rotary/lifting module features a linear and swivel motion as well as a pneumatic gripper. Statistical measuring tasks can be automated, or random samples taken from the process.

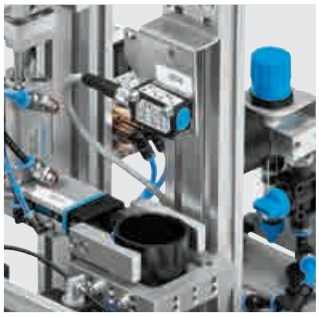

Measuring station, mounted	8038623

Additional equipment, also order:

MPS trolley, 700 x 350	8033590
Control console, SysLink	195764
EduTrainer Universal ➔ Pages 87 – 95	

Recommended accessories:

Simulation box, digital	170643
Simulation box, digital/analog	526863
I/O data cable with SysLink connectors (IEEE 488), crossover	167106
Analog cable, crossover	533039
PA workpiece set	554301

The most important components at a glance:

1x Aluminum profile plate, 700 x 350 mm, with cable guide	170395
1x Conveyor module, 350 x 40 mm, DC	8032692
1x Rotary/lifting module	8035936
1x Slide module	653393
1x Measuring table	8040204
1x Stopper, simple, with valve	8046324
1x Start-up valve with filter control valve	540691
1x Cable holder with hook-and-loop fastener (pack of 10)	8034300
1x C-Interface	8025738
1x Quick-Fix clamping adapter	8026327

Training content
- Station design
- Fundamentals of pneumatics
- Sensors – optoelectrical sensors, digital and analog
- Connecting tubing and wiring
- Reading circuit diagrams
- Connecting DC motors and motor controllers
- Belt control system
- Programming and processing standards
- Analog signal processing

Recommended training media
- EasyPort
- CIROS®
- WBT Electropneumatics
- WBT GRAFCET
- WBT PLC programming in accordance with IEC 61131
- FluidSIM® design and simulation program
- Textbook Fundamentals of pneumatics and electropneumatics
- Basic level and advanced level workbooks
  MPS® conveyor module,
  PLC programming

Technical data
- Operating pressure:
  600 kPa (6 bar)
- Power supply: 24 V DC
- Round workpiece dimensions:
  max. 40 mm
- 8 digital sensors
- 7 digital actuators
- 1 analog input

Measuring station with additional equipment

Slide module
The slide comes complete with a retainer for mounting on a profile plate.
- Application:
  As end slide or segregating slide
- Length: 250 mm
- Standard height:
  117 – 20 mm (adjustable)

Order no.	653393

Stopper, simple, with valve
Stopper module, complete with single-acting pneumatic cylinder with valve and mounting accessories for a guide rail and connecting cable.
- Stroke: 10 mm

Order no.	8046324

Separating station
Flexibility

New

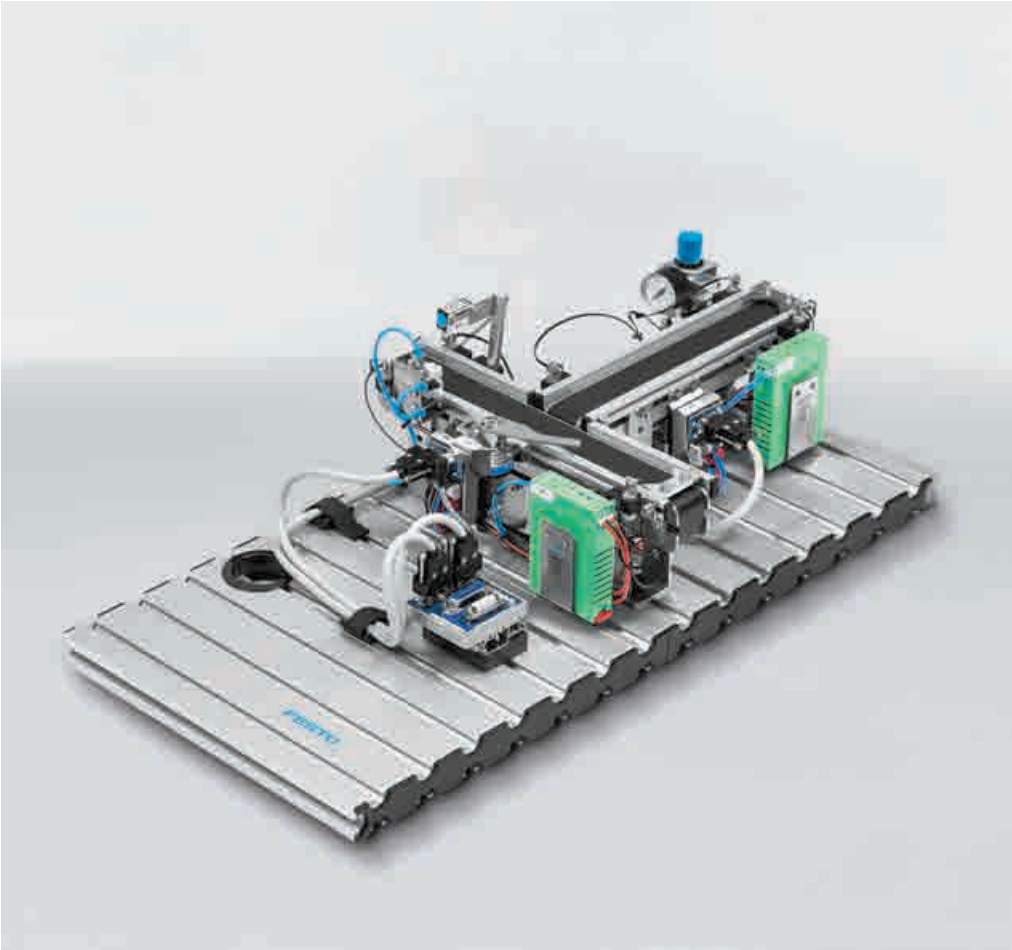

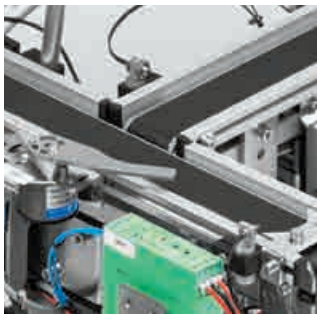

Function
The Separating station differentiates workpieces based on their drilled hole depth and separates them into two different material flow directions. Workpieces placed on the belt are transported to the depth measurement point. An analog diffuse sensor checks the hole depth. Workpieces with a deep hole are transported to the end of the belt. Workpieces with a shallower hole or a skewed workpiece are directed towards the rear via the second belt using an electric deflector with quarter turn actuator. Fiber-optic through beam sensors with optoelectrical sensors monitor the material flow on the belts.

The Separating station can be supplemented with MPS® downstream stations in two directions and the belts can be operated in both directions.

Topic: Analog and digital
The diffuse sensor supplies both an analog and a binary output signal. This facilitates different training levels. The binary switching output can be adapted to the measurement requirement and the signal type by means of a simple teach-in process.

Topic: Flexible assembly line
The Separating station permits the creation of flexible assembly lines using MPS® stations. Combined assembly processes such as cylinder assembly and assembly of workpiece inserts in the housing can be realized using the Separating station.

Separating station, mounted	**8038802**

Additional equipment, also order:

MPS trolley, 700 x 350	8033590
Control console, SysLink	195764
EduTrainer Universal ➔ Pages 87 – 95	

Recommended accessories:

Simulation box, digital	170643
PA workpiece set	554301

The most important components at a glance:

1x Aluminum profile plate, 700 x 350 mm, with cable guide	170395
1x Conveyor module, 300 x 40 mm, DC	8033135
1x Conveyor module, 350 x 40 mm, DC	8032692
1x Diffuse sensor, analog	541120
1x Stopper, simple, with valve	8046324
1x Start-up valve with filter control valve	540691
1x Cable holder with hook-and-loop fastener (pack of 10)	8034300
1x C-Interface	8025738
1x Quick-Fix clamping adapter	8026327

Training content
- Station design
- Sensors – optoelectrical sensors, digital and analog
- Connecting tubing and wiring
- Reading circuit diagrams
- Connecting DC motors and motor controllers
- Belt control system
- Programming of alternative (OR) branches
- Analog signal processing

Technical data
- Operating pressure: 600 kPa (6 bar)
- Power supply: 24 V DC
- Round workpiece dimensions: max. 40 mm
- 6 (5) digital sensors
- 6 digital actuators
- 1 analog input (alternative)

Recommended training media
- EasyPort
- CIROS®
- WBTs Sensors
- WBTs Electrical system
- WBT PLC programming in accordance with IEC 61131
- FluidSIM® design and simulation program
- Basic level and advanced level workbooks MPS® conveyor module, PLC programming

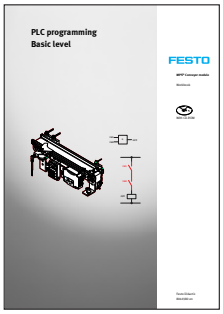

Separating station with additional equipment

Diffuse sensor, analog
The optical sensor comes complete with holder for mounting on the guide rail profile of the conveyor. Measuring range 0 – 30 mm with analog output 0 – 10 V and PNP switching output. The switching output can be freely adjusted via a teach-in process. Supplied complete with connecting cable.

Order no.	541120

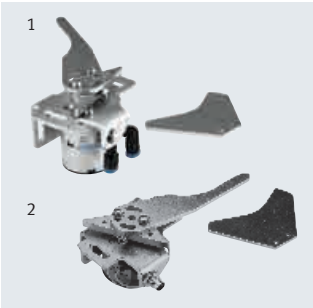

Sorting gate/separator module
For mounting on a conveyor. Includes mounting accessories.

1 pneumatic*	534367
2 electrical	532952
Sensor set for end-position sensing	
(2 inductive sensors)	536432

* 5/2-way pneumatic valve necessary.

Pick&Place station

Small is beautiful

New

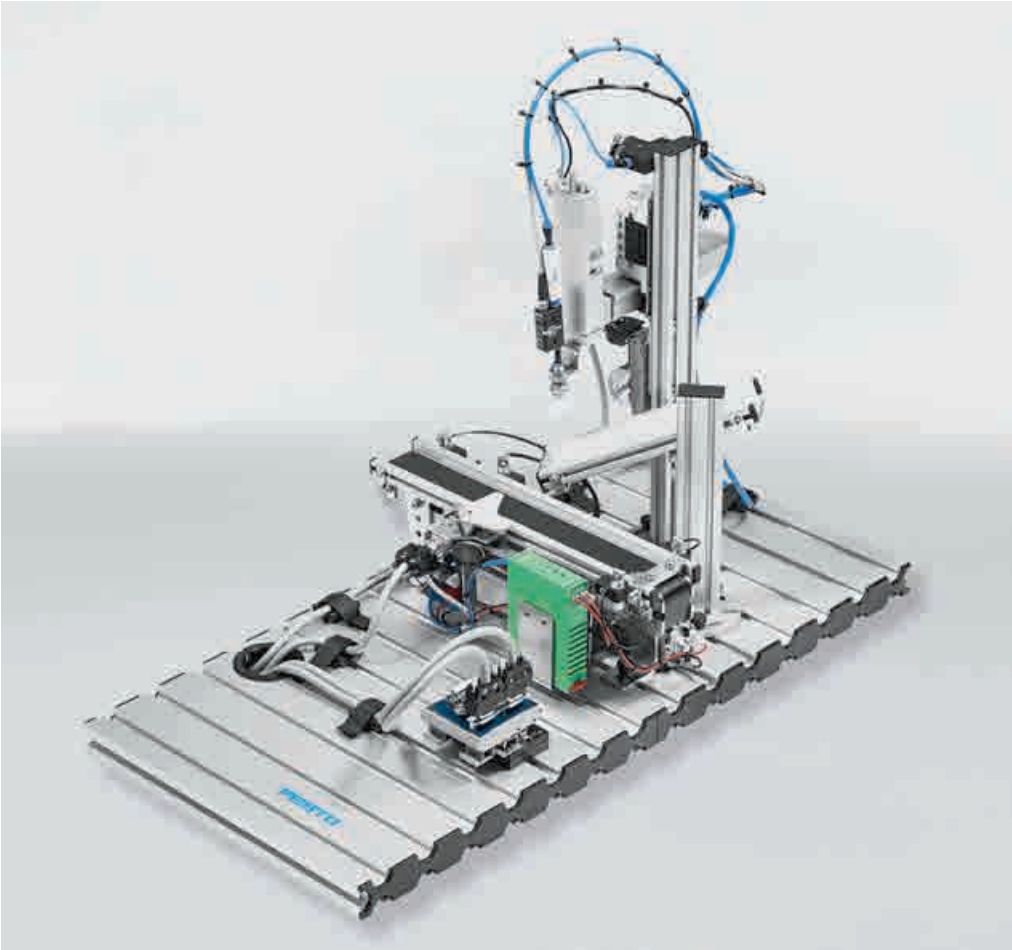

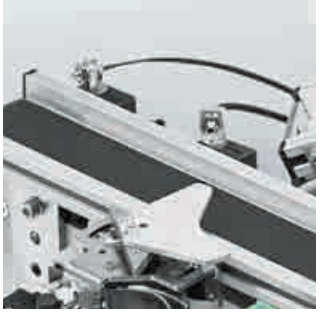

Function
The Pick&Place station is equipped with a two-axis Pick&Place module and a Conveyor module. Optical diffuse sensors or through-beam sensors detect the workpiece housing placed on the conveyor. The conveyor transports the workpiece to the electric feed separator. The Pick&Place module picks up a workpiece insert from the slide and places it on the workpiece housing. The complete workpiece (housing and insert) is released by the separator and transported to the end of the conveyor.

Additional functions can be produced using the Pick&Place station.
– Rejection of workpieces (housing or cylinder bodies) on the slide
– Alternative feeding of workpieces (housing or cylinder bodies) from the slide

Topic: Linear slide units
Slide units from Festo can be used to further extend the versatility of the Pick&Place module. Variable stops, silencers and an attachment that can be adjusted in all directions provide the ideal solution for every Pick&Place task. This permits a wide range of projects to be implemented.

Topic: Vacuum technology
The vacuum components, vacuum generators, pressure switches, vacuum filters and suction cups are harmonized for optimum performance. They clearly demonstrate the principle behind vacuum applications: vacuum generation using a generator, the correct suction cup with matching filter and the teach-in electronic pressure switch with freely programmable switching points for pressure sensing.

Station Pick&Place, mounted	**8034567**

Additional equipment, also order:

MPS trolley, 700 x 350	8033590
Control console, SysLink	195764
EduTrainer Universal ➔ Pages 87 – 95	

Recommended accessories:

Simulation box, digital	170643
PA workpiece set	554301

The most important components at a glance:

1x Aluminum profile plate, 700 x 350 mm, with cable guide	170395
1x Conveyor module, 350 x 40 mm, DC	8032692
1x Pick&Place module, with vacuum technology	8031659
1x Start-up valve with filter control valve	540691
1x Cable holder with hook-and-loop fastener (pack of 10)	8034300
1x C-Interface	8025738
1x Quick-Fix clamping adapter	8026327

Training content
- Basic principles of pneumatics
- Sensor technology: magnetic limit switches, opto-electrical sensors
- Connecting tubing and wiring
- Reading circuit diagrams
- Getting to know handling systems
- Vacuum technology/gripper technology
- Belt control
- Buffering and separating

Technical data
- Operating pressure: 600 kPa (6 bar)
- Power supply: 24 V DC
- Square/round workpiece dimensions: max. 40 mm
- 7 digital sensors
- 6 digital actuators

Recommended training media
- CIROS®
- WBT PLC programming in accordance with IEC 61131
- WBT Pneumatics
- WBT Electropneumatics
- WBT Sensor technology 1 and 2
- FluidSIM® Pneumatics design and simulation program
- Textbook Basic principles of pneumatics and electropneumatics
- Equipment set TP 230 – Vacuum technology, Advanced Level
- Workbook Basic principles of vacuum technology, TP 230
- Basic level and advanced level workbooks MPS® conveyor module, PLC programming
- Basic level and advanced level workbooks MPS® Pick&Place module, PLC programming

Station Pick&Place with additional equipment

1

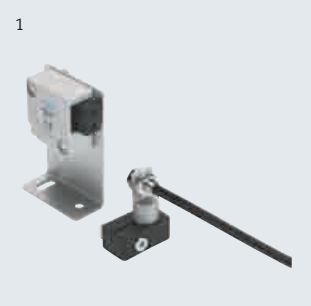

Diffuse sensor
The diffuse sensor consists of a sensor with a cable and mounting bracket for a profile/profile plate and a fiber-optic cable. Available in two designs.

1 with holder	196959
without holder	526212

DC motor controller for clockwise/ anti-clockwise rotation
Motor control for 24 V DC brushed DC motors. Control voltage 24 V DC, galvanic isolation between input and output circuits, reverse polarity protection on input side, can be clicked onto the DIN bus bars EN 50022 and EN 50035.

Order no.	567245

Storing station

“In and Out”

New

Function
The Storing station can differentiate among workpieces based on their color and store up to 48 workpieces across six levels in two rows. The product on the receiving slide is identified based on color with the help of a combination of sensors, and stored on one of six storage levels. A Cartesian handling system with stepper motors and robotic functionality is positioned to this end. A pneumatic gripper mounted on a stepper motor with screw axis picks the workpiece from the holder and places it in the storage area. The storage area can be located both at the start (removal from storage) and at the end (placement into storage) of a production line, or as a buffer station within a production line, by means of appropriate programming. There is also a slide on the goods issuing side.

Topic: Material detection
Inductive and optoelectrical sensors detect the color and material of workpieces. These can be placed into storage as appropriate to the workpiece type.

Topic: Workpiece sorting
Actuated stepper motors transport the workpiece into the appropriate storage positions.

Topic: Embedded systems
The warehouse is operated using a Cartesian handling system with stepper motors, robotic functionality, and a pre-programmed controller with a web interface. The command is provided by external control signals.

Project work
Like all the other MPS® stations, the great modularity of the Sorting station makes it particularly suited for project work – conveyor instead of slide or programming and testing various storage strategies?

Storing station including trolley	**8049013**

Additional equipment, also order:

Control console, SysLink	195764
EduTrainer Universal ➔ Pages 87 – 95	

Recommended accessories:

Simulation box, digital	170643
PA workpiece set	554301

The most important components at a glance:

1x MPS trolley, 700 x 350	8033248
1x Aluminum profile plate, 700 x 350 mm, with cable guide	170395
1x Detection module	8044527
2x Slide	On request
1x Start-up valve with filter control valve	540691
1x Cable holder with hook-and-loop fastener (pack of 10)	8034300
1x I/O-Terminal	8025736
1x Festo CECC CODESYS V3 compact controller	8023951

Training content
- Learning about a Cartesian handling system
- Sensors: optoelectrical and inductive sensors, digital
- Connecting tubing and wiring
- Reading circuit diagrams
- Learning about and actuating stepper motors
- Storage strategies
- Learning about and applying embedded systems
- Using web interfaces to control and monitor the station
- Controlling storage and retrieval functions for storage slot and color via bit codes

Recommended training media
- EasyPort
- CIROS®
- WBT Electropneumatics
- WBTs Electric drives 1 and 2
- WBT PLC programming in accordance with IEC 61131
- FluidSIM® design and simulation program
- Textbook Fundamentals of stepper motor drive technology

General technical data:
- Operating pressure: 600 kPa (6 bar)
- Power supply: 2x 24 V DC/4.5 A
- Square/round workpiece dimensions: max. 40 mm
- 5 digital sensors
- 1 digital actuator
- Dimensions (W x D x H): 350 x 700 x 904 mm
- Overall height with trolley: 1,654 mm

Storing station

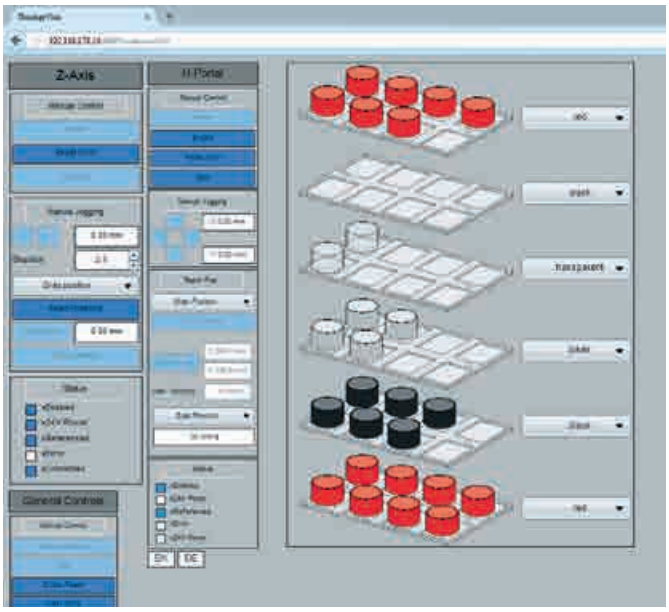

Web-Interface

Sorting station

Last but not least

New

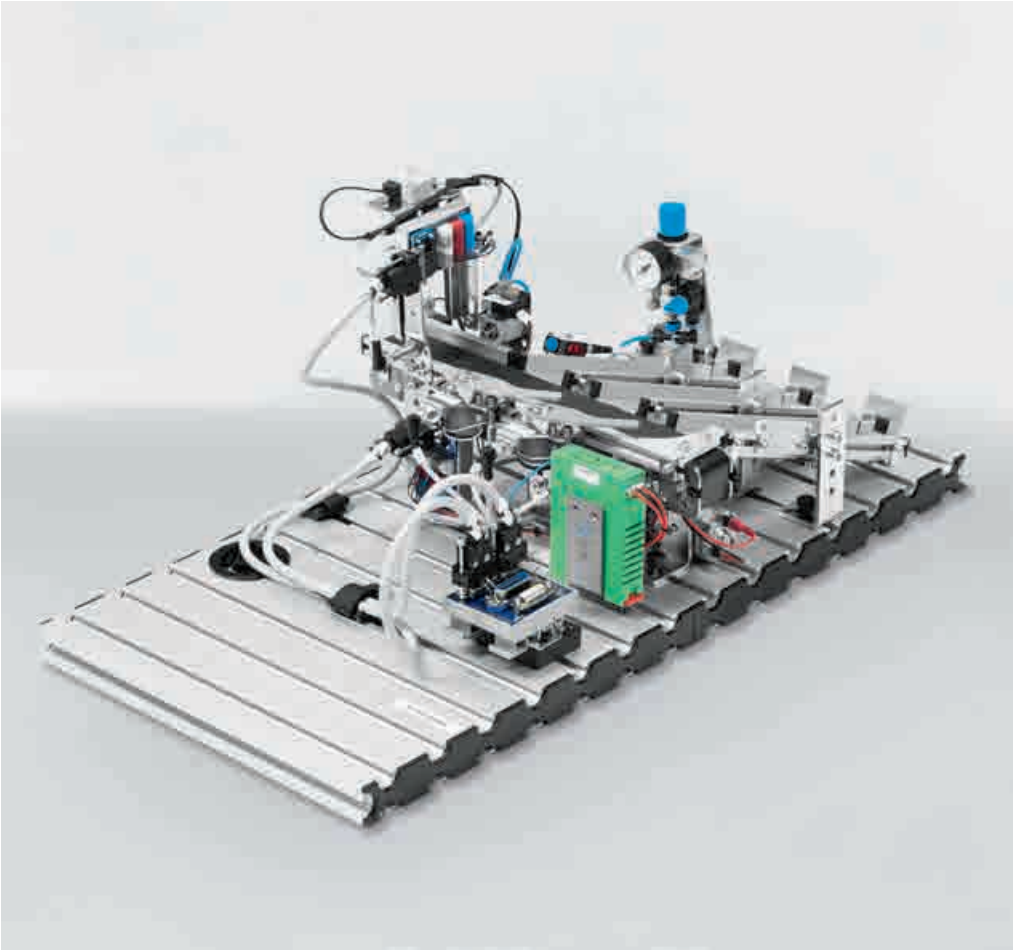

Function
This station sorts workpieces onto three slides. Workpieces placed on the start of the conveyor are detected by a diffuse sensor. A pneumatic stopper with integrated valve stops the workpiece before the sorting process. Sensors upstream of the stopper detect the workpiece features (black, red, metal). The cylindrical workpieces are sorted onto the appropriate slides via electric deflectors. A retro-reflective sensor monitors the fill levels of the slides.

Topic: Material detection
Inductive and opto-electrical sensors detect the color and material of workpieces. A short-stroke cylinder stops the workpieces on the moving conveyor and passes them on for sorting onto one of three slides.

Project work
Like all MPS® stations, the great modularity of the Sorting station makes it particularly suited for project work. An example: Camera system or RFID instead of sensors?

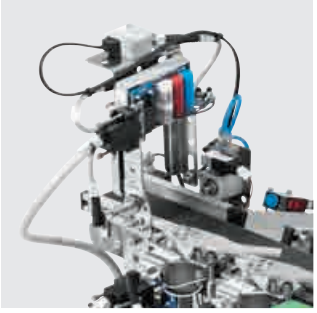

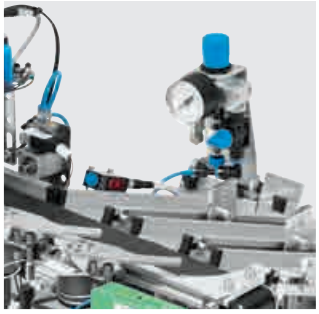

Sorting station, mounted	**8046325**

Additional equipment, also order:

MPS trolley, 700 x 350	8033590
Control console, SysLink	195764
EduTrainer Universal ➔ Pages 87 – 95	

Recommended accessories:

Simulation box, digital	170643
PA workpiece set	554301

The most important components at a glance:

1x Aluminum profile plate, 700 x 350 mm, with cable guide	170395
1x Conveyor module, 350 x 40 mm, DC	8032692
1x Detection module	8044527
3x Slide module	653393
1x Sorting gate/separator module, electrical	532952
1x Stopper, simple, with valve	8046324
1x Start-up valve with filter control valve	540691
1x Cable holder with hook-and-loop fastener (pack of 10)	8034300
1x C-Interface	8025738
1x Quick-Fix clamping adapter	8026327

Training content
- Station setup
- Sensor technology
- Connecting tubing and wiring
- Reading circuit diagrams
- Connecting DC motors and motor controllers
- Belt control system
- Programming sorting functions

Technical data
- Operating pressure: 600 kPa (6 bar)
- Power supply: 24 V DC
- Square/round workpiece dimensions: max. 40 mm (1.6 mm)
- 8 digital sensors
- 4 digital actuators

Recommended training media
- EasyPort
- CIROS®
- WBT Electropneumatics
- WBT GRAFCET
- WBT PLC programming in accordance with IEC 61131
- FluidSIM® design and simulation program
- Textbook Basic principles of pneumatics and electropneumatics

Sorting station with additional equipment

Inductive sensor
The inductive sensor is complete with holder for mounting on the guide rail profile of the conveyor or a slide.

Order no.	196968

Retro-reflective sensor for guide rail
The component comprising the transceiver and mirror can be mounted directly on the guide rail of a conveyor or slide. Includes mounting accessories and connecting cable.

Order no.	8063218

Programming station

Do your own thing!

New

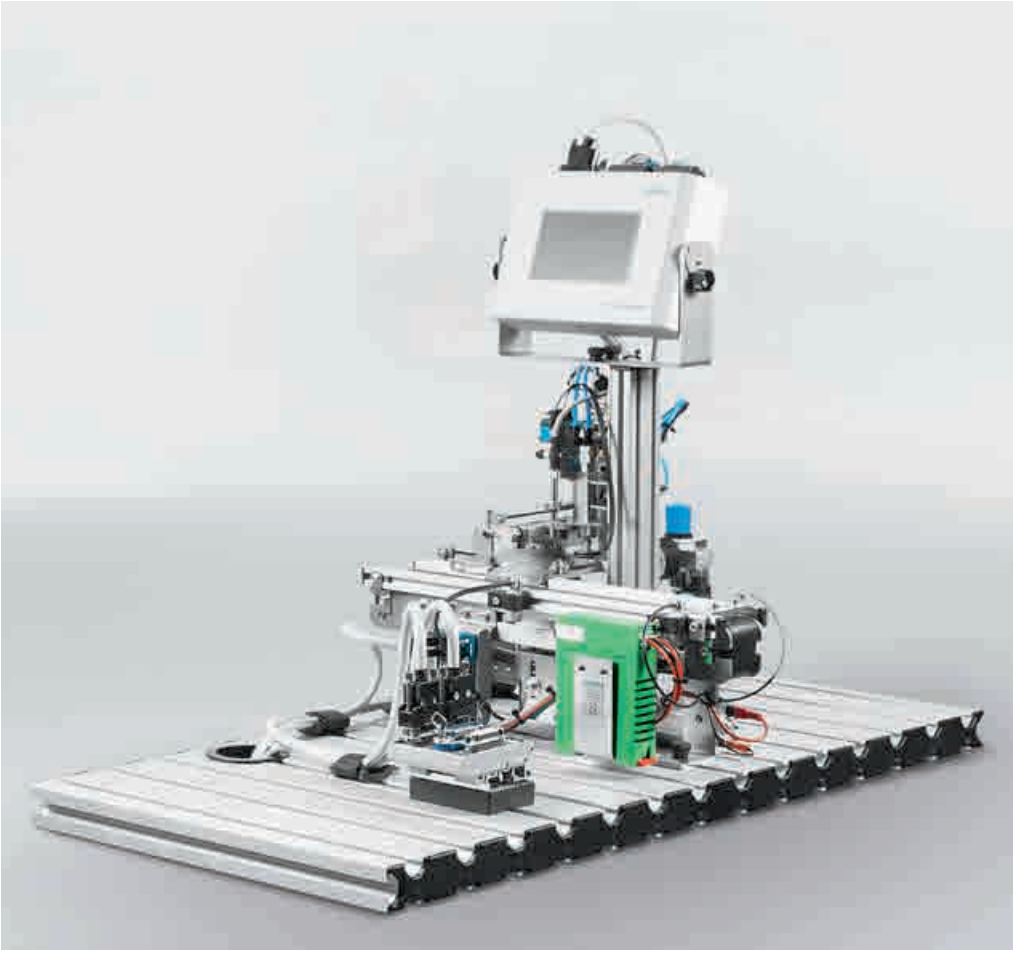

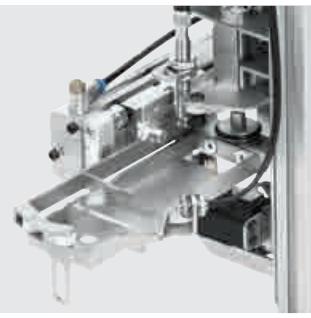

Function
The Programming station transports and programs the EasyKit workpiece attachment. The Conveyor module transports the workpiece attachment to the loading position of the programming module. The module control unit loads, aligns, programs and ejects the workpiece attachment.

The control unit stores up to seven different programs for the EasyKit microcontroller system. The integrated Touch Panel or an external PLC actuates the control unit of the module.

The programmed EasyKit is transported to the end of the conveyor.

Topic: Workpiece detection and transport
Optical proximity sensors detect the position of the workpiece. The Conveyor module transports the workpiece through the station. A double-acting cylinder loads and unloads the programming module.

Topic: Workpiece alignment
A capacitive proximity sensor identifies the orientation of the EasyKit workpiece attachment. A DC motor rotates the EasyKit into the correct position for programming.

Project work
Like all other MPS® stations, the great modularity of the Programming station makes it particularly suited for project work.
– Feeding the EasyKit via the conveyor or external handling systems.
– Extension of the station with a stacking magazine.

Programming station, mounted	**8059892**

Additional equipment, also order:

MPS trolley, 700 x 350	8033590
Control console, SysLink	195764
EduTrainer Universal ➔ Pages 87 – 95	

Recommended accessories:

Simulation box, digital	170643
EasyKit microcontroller system	8049530

The most important components at a glance:

1x Aluminum profile plate, 700 x 350 mm, with cable guide	170395
1x Conveyor module, 350 x 40 mm, DC	8032692
1x Programming module	8046521
1x Start-up valve with filter control valve	540691
1x Cable holder with hook-and-loop fastener (pack of 10)	8034300
1x C-Interface	8025738
1x Quick-Fix clamping adapter	8026327

Training content
- Station design
- Sensors
- Connecting tubing and wiring
- Reading circuit diagrams
- Connecting DC motors and motor controllers
- Belt control system
- Programming µ controllers
- Bit communication with embedded systems

Technical data
- Operating pressure: 600 kPa (6 bar)
- Power supply: 24 V DC
- Square/round workpiece dimensions: max. 40 mm
- 6 digital input signals for embedded controllers
- 6 digital output signals from embedded controllers

Recommended training media
- EasyPort
- CIROS®
- WBT Electropneumatics
- WBT Actuators – DC motor
- WBT GRAFCET
- WBT PLC programming in accordance with IEC 61131
- FluidSIM® design and simulation program
- Textbook Fundamentals of pneumatics and electropneumatics
- Workbooks Basic level and Advanced level MPS® conveyor module, PLC programming

Programming station with additional equipment

EasyKit microcontroller system
➔ Page 209

Order no.	8049530

Packaging station

Into the box, set, go

New

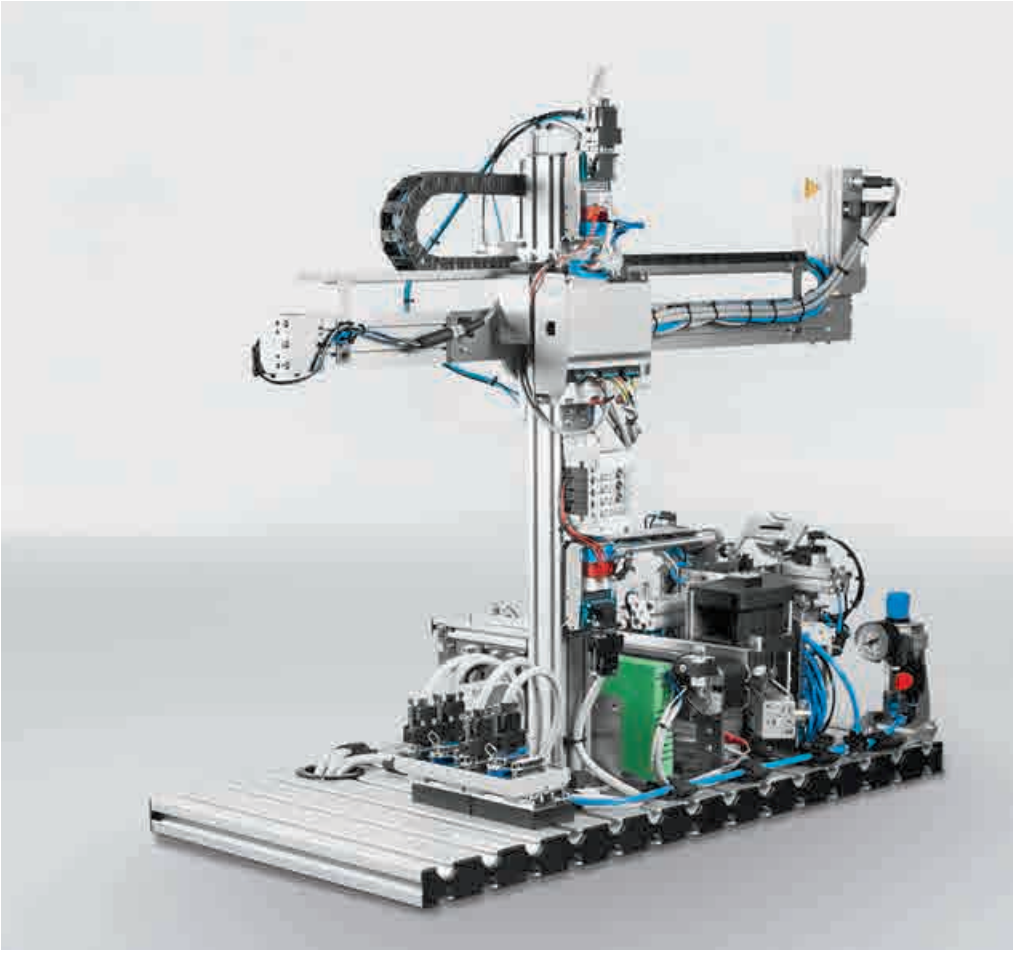

Function
The Packaging station is responsible for packaging workpieces fully automatically. A conveyor carries the object into the collecting position to the two-axis handling module. A box is then separated and folded in the Packaging module. The box is then prepared for loading. The workpiece is placed into the box with the two-axis handling module via a stepper motor into the x-axis and a cylinder connected in steps in the z-axis. The box is then sealed and transported back to the Conveyor module. The fully packaged workpiece is transported to the end of the conveyor.

Stepper motor
The stepper motor with controller moves the linear axis to various positions with a high positioning accuracy.

Pneumatic control system
Pneumatic limit sensors detect the position of the cylinder, controlling the box's closing mechanism.

Project work
Like all other MPS® stations, the Packaging station is particularly suitable for project work due to its modularity. Logististical processes expand the flow of materials and offer wide-ranging training content.

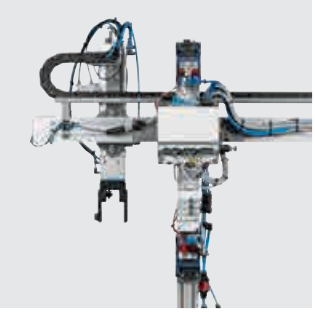

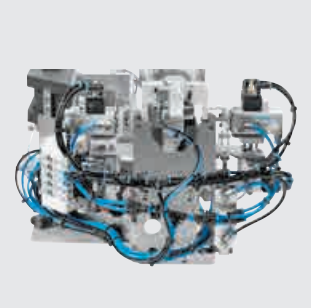

Packaging station, mounted	**8062644**

Additional equipment, also order:

MPS trolley, 700 x 350	8033590
Control console, SysLink	195764
EduTrainer Universal	On request

Recommended accessories:

Simulation box, digital	170643
Workpiece set ➔ Pages 206 – 207	

The most important components at a glance:

1x Aluminum profile plate, 700 x 350 mm, with cable guide	170395
1x Conveyor module, 350 x 40 mm, DC	8032692
1x Two-axis handling module with a stepper motor	8049257
1x Packaging module	8043505
1x Start-up valve with filter control valve	540691
1x Cable holder with hook-and-loop fastener (pack of 10)	8034300
1x C-Interface	8025738
1x Quick-Fix clamping adapter	8026327
Box size 1 (50 piece): 48 x 42 x 50	8064300
Box size 2 (50 piece): 48 x 42 x 60	8064301

Training content
- Station design
- Sensors
- Connecting tubing and wiring
- Reading circuit diagrams
- Pneumatic control systems
- Belt control system
- Actuating DC and stepper motors via motor controllers
- Bit communication with motor controller
- Packaging process

Technical data
- Operating pressure: 600 kPa (6 bar)
- Power supply: 24 V DC/4.5 A
- Square/round workpiece dimensions: max. 40 mm
- 15 digital input signals
- 14 digital output signals
- Dimensions (W x D x H): 350 x 700 x approx. 900 mm

Recommended training media
- EasyPort
- CIROS®
- WBT Electropneumatics
- WBT GRAFCET
- WBT PLC programming in accordance with IEC 61131
- FluidSIM® design and simulation program
- Textbook Fundamentals of pneumatics and electropneumatics
- Workbooks Basic level and advanced level MPS® conveyor module, PLC programming

Packaging station with additional equipment

Boxes

Box size 1 (50 piece) (L x W x H): 48 x 42 x 50	8064300
Box size 2 (50 piece) (L x W x H): 48 x 42 x 60	8064301

Distributing station

Getting started with MPS®

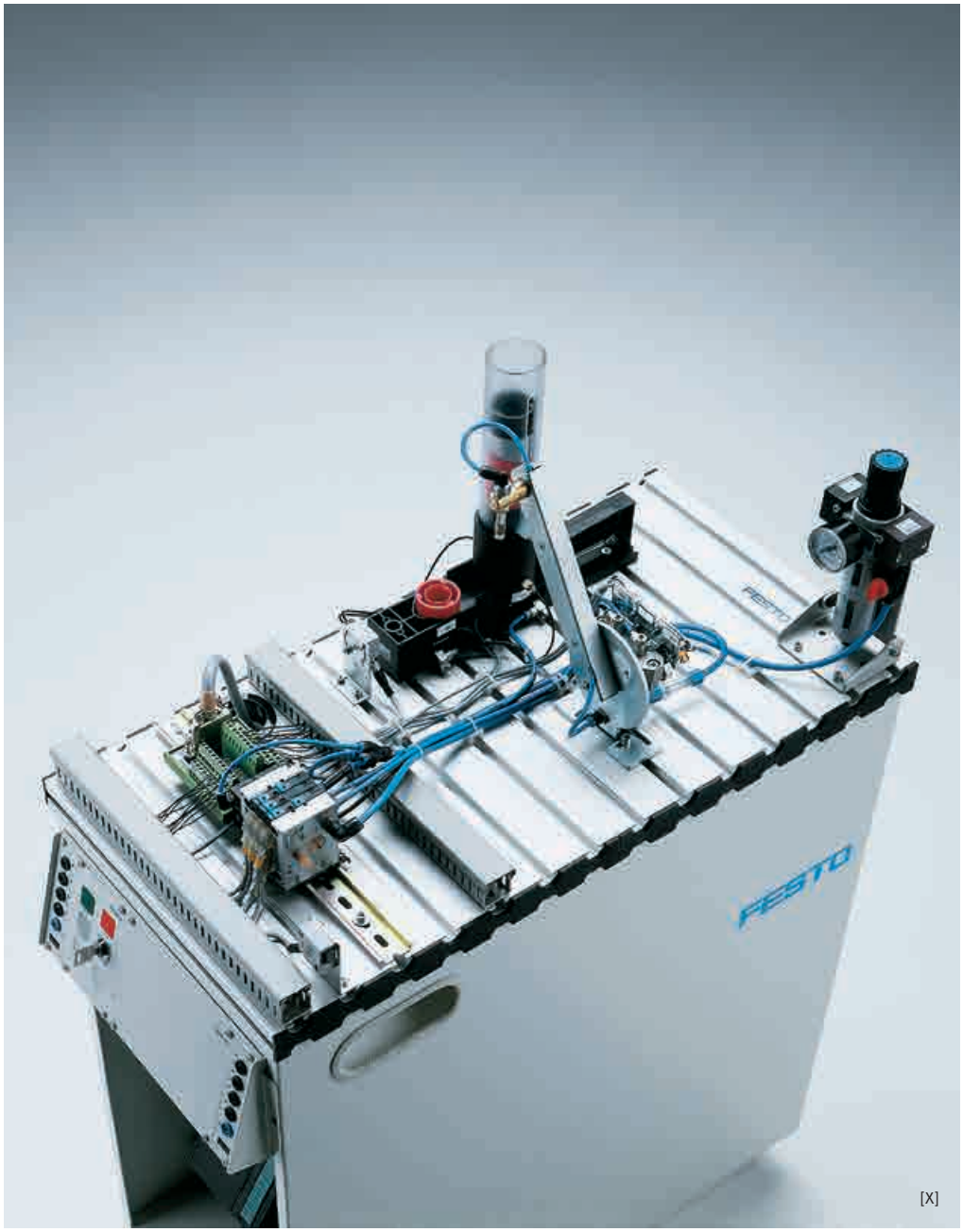

[X]

Function
The Distributing station separates workpieces. Up to eight workpieces are stored in the magazine tube of the stacking magazine. A double-acting cylinder pushes the workpieces out one at a time. The Changer module grips the separated workpiece via a suction gripper. The swivel arm of the changer, which is driven by a rotary actuator, moves the workpiece to the transfer point of the downstream station.

Special technology:
Semi-rotary actuator
The Distributing station utilizes various actuators, all of which are industrial components. The rotary actuator of the swivel arm can be set to various angles between 90° and 270°. The end positions are sensed by means of micro switches. A double-acting linear cylinder pushes workpieces out of the stacking magazine. The end positions are sensed using proximity sensors.

Special grippers:
Suction gripper
The suction gripper of the Changer module grips the workpiece. The vacuum is generated in the vacuum slice of the CP valve terminal by means of the Venturi principle and is monitored by a pressure switch. The switching point of the pressure switch is adjustable.

 [X] Illustration includes accessories

Distributing station, mounted	**195780**
Kit Distributing station	**526880**

Additional equipment, also order:

MPS trolley, 700 x 350	8033590
Control console, SysLink	195764
EduTrainer Universal ➔ Pages 87 – 95	

Recommended accessories:

Simulation box, digital	170643
Workpiece set “Cylinder bodies”	167021

Technical data
– Operating pressure 600 kPa (6 bar)
– Power supply 24 V DC
– 7 digital inputs
– 5 digital outputs

Training aims for project work
Mechanical:
– Mechanical set-up of a station
Pneumatics:
– Installation of tubing for pneumatic components
– Vacuum technology
– Pneumatic linear and rotary drives
Electrical:
– Correct wiring of electrical components
Sensors:
– Correct application of limit switches
PLC:
– Programming and application of a PLC
– Structure of a PLC program
– Programming an operating mode section
– Orderly RESET sequence
– Programming an EMERGENCY STOP

Recommended training media
– WBT Discover MPS® 200

– WBT PLC programming in accordance with IEC 61131
– WBT GRAFCET
– WBT Pneumatics
– Mechatronics Assistant

– Training document Distributing station
– Design and simulation program FluidSIM® Pneumatics
– Virtual process environment CIROS®
– Textbook Pneumatics, Basic level
– Textbook Programmable logic controllers, Basic level
– Tec2Screen® Courses – MPS® Stacking Magazine module
  – Commissioning
  – Logic programming
– Tec2Screen® Courses – MPS® Changer module
  – Commissioning
  – Logic programming

Start-up valve with filter control valve
Filter control valve with Pressure gauge and Start-up valve mounted on adapter with ajustable angle. The Start-up valve pressures/exhausts the connected pressure zone.

Order no.	**540691**

Changer module
The Changer module is a pneumatic handling device. A suction cup is used to pick up workpieces and relocate them to positions from 0° to 180° using a semi-rotary drive. Sensors assume end-position detection.

Order no.	**162387**

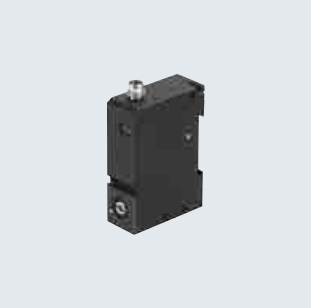

Vacuum switch
Mechanical vacuum switch with adjustable switching point and switching status display (LED).

Order no.	**196973**

Processing station

Purely electrical

[X]

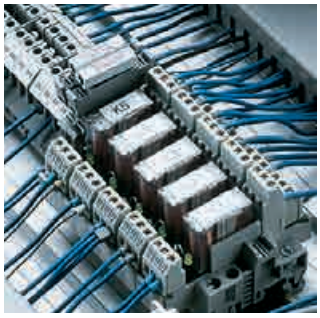

Function
In the Processing station, workpieces are tested and processed on a rotary indexing table. This station only uses electrical drives. The rotary indexing table is driven by a DC motor. The table is positioned by a relay circuit, with the position of the table being detected by an inductive sensor. On the rotary indexing table, the workpieces are tested and drilled in two parallel processes. A solenoid probe with an inductive sensor checks that the workpieces are inserted in the correct position. During drilling, the workpiece is clamped by a solenoid actuator. Finished workpieces are passed on via the electrical sorting gate.

Attention!
Drilling operation
Drill feed is undertaken by an electrical linear axis with a DC motor, which is controlled via a reversing starter. The end positions are sensed by means of micro switches. The drill is fully functional, but for safety reasons the drilling processes are only simulated.

Electrical only:
Many different drives
The station requires the programming of two processes executed in parallel: drilling and drill-hole testing. This station also offers a range of different drives:
– DC drill
– DC motor on rotary indexing table
– Electrical linear drive for drill feed
– Electrical sorting gate
– Solenoid actuator in the clamping module and the Testing module

 [X] Illustration includes accessories

Processing station, mounted	**195782**
Kit Processing station	**526882**

Additional equipment, also order:

MPS trolley, 700 x 350	8033590
Control console, SysLink	195764
EduTrainer Universal ➔ Pages 87 – 95	

Recommended accessories:

Simulation box, digital	170643
Workpiece set “Cylinder bodies”	167021

Technical data
– Power supply 24 V DC
– 8 digital inputs
– 8 digital outputs

Training aims for project work
Mechanical:
– Mechanical set-up of a station
– Selection of linear drives
Electrical:
– Correct wiring of electrical components
Sensors:
– Correct application of limit switches
PLC:
– Programming of logic controllers and parallel step sequences
Troubleshooting:
– Systematic troubleshooting in a production system
Handling technology:
– Checking incoming workpieces

Recommended training media
– WBT Actuators – DC motor

– Mechatronics Assistant

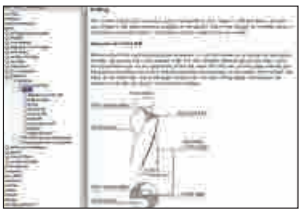

– Textbook Programmable logic controllers, Basic level
– Virtual process environment CIROS®
– Tec2Screen® Courses
  – MPS® Processing station
  – Rotary Indexing Table module
  – Drilling module

Testing module
The Testing module consists of a solenoid probe with an inductive sensor for sensing. The module can be used for the testing of workpieces: simple drill-hole checking, simple height checking, workpiece position checking.

Order no.	**195773**

Drilling module
The Drilling module comprises a drilling machine attached to a linear axis driven by a DC motor. The end positions are sensed by means of micro switches.

Order no.	**196974**

Rotary indexing table module
Rotary indexing table with 6 workpiece positions. The table is driven by a DC-geared motor with a series resistor.

Order no.	**654972**

Clamping/ejecting module
For mounting on a profile plate. An electrical solenoid is used for the drive (Working stroke = 9 mm).

Order no.	**526218**

Handling station, pneumatic

All-rounder with pneumatic linear drive

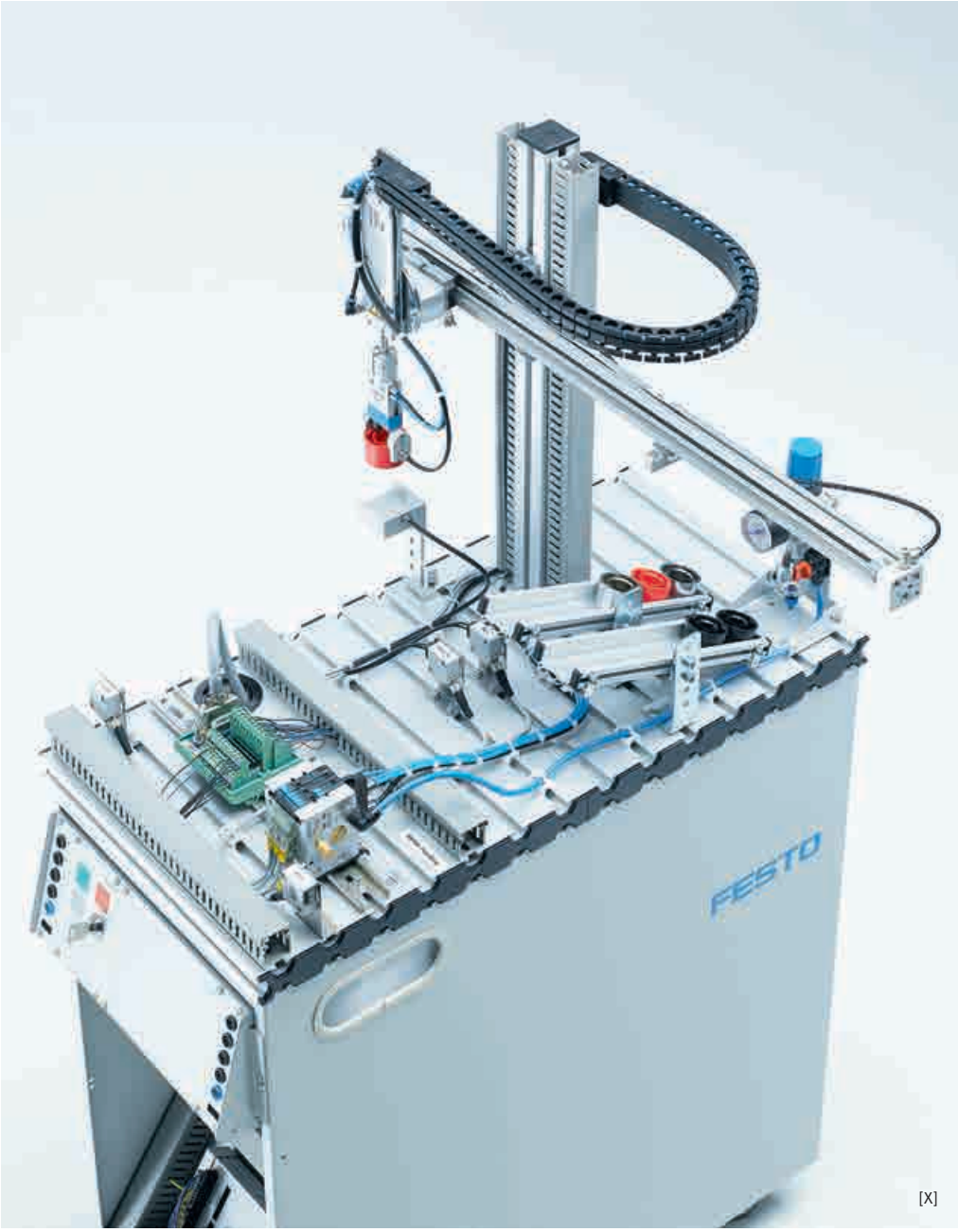

[X]

Function
The Handling station, pneumatic, is equipped with a flexible two-axis handling device. Workpieces inserted into the holder are detected by an optical diffuse sensor. The handling device picks up the workpieces from there with the aid of a pneumatic gripper. The gripper is equipped with an optical sensor which differentiates between “black” and “non-black” workpieces. The workpieces can be placed on different slides according to this criterion. Other sorting criteria can be defined if the station is combined with other stations. Workpieces can also be transferred to a downstream station.

Good example:
Modular handling system from Festo
The Handling station, pneumatic, utilizes industrial handling components. A pneumatic linear axis with flexible end-position adjustment and cushioning allows fast positioning, including to intermediate positions. A flat linear cylinder with end-position detection serves as the lifting cylinder for the Z axis. A modern pneumatic linear gripper is mounted on the lifting cylinder. The optical sensor integrated into the jaw of the gripper recognizes the workpieces.

Project exercise:
New requirements – different grippers
The PicAlfa module, pneumatic, is highly flexible: stroke length, inclination of the axes, arrangement of the end-position sensors and the installation position can all be adjusted. This enables the station to be adapted for a broad range of handling tasks without the use of additional elements – an ideal project for advanced trainees.

 [X] Illustration includes accessories

Handling station pneumatic, mounted	**195783**
Kit Handling station, pneumatic	**526883**

Additional equipment, also order:

MPS trolley, 700 x 350	8033590
Control console, SysLink	195764
EduTrainer Universal ➔ Pages 87 – 95	

Recommended accessories:

Simulation box, digital	170643
Workpiece set “Cylinder bodies”	167021
Workpiece set “For cylinder assembly”	162239

Technical data
– Operating pressure 400 kPa (4 bar)
– Power supply 24 V DC
– 8 digital inputs
– 5 digital outputs

Training aims for project work
Mechanical:
– Mechanical set-up of a station
Pneumatics:
– Installation of tubing for pneumatic components
– Pneumatic grippers
– Pneumatic linear drives
Electrical:
– Correct wiring of electrical components
Sensors:
– Correct application of limit switches
PLC:
– Programming and application of a PLC
– Control of a handling device
Commissioning:
– Commissioning of the entire sequence
– Optimization of cycle time
– Safety in the event of loss of pneumatic or electrical power

Recommended training media
– WBT Electropneumatics

– Mechatronics Assistant

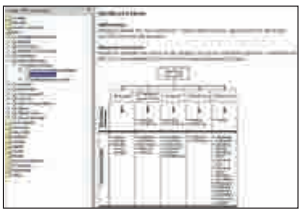

– Design and simulation program FluidSIM® Pneumatics
– Textbook Programmable logic controllers, Basic level

PicAlfa module, pneumatic
Universal 2-axis handling device for “Pick&Place” tasks. Stroke length, inclination of the axes and arrangement of the end-position sensors and mounting position can be adjusted.

Order no.	**526215**

Holder module
The Holder module comes complete with a holder for mounting on a profile plate.

Order no.	**195777**

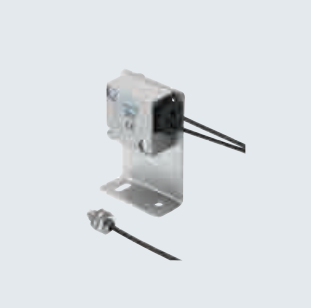

Diffuse sensor
The fiber-optic diffuse sensor can be mounted directly in the pickup module, at the end of a slide or on a gripper.

Order no.	**526212**

Slide module
The slide comes complete with a retainer for mounting on a profile plate.

Order no.	**653393**

Handling station, electrical

Up-to-date with electric drives

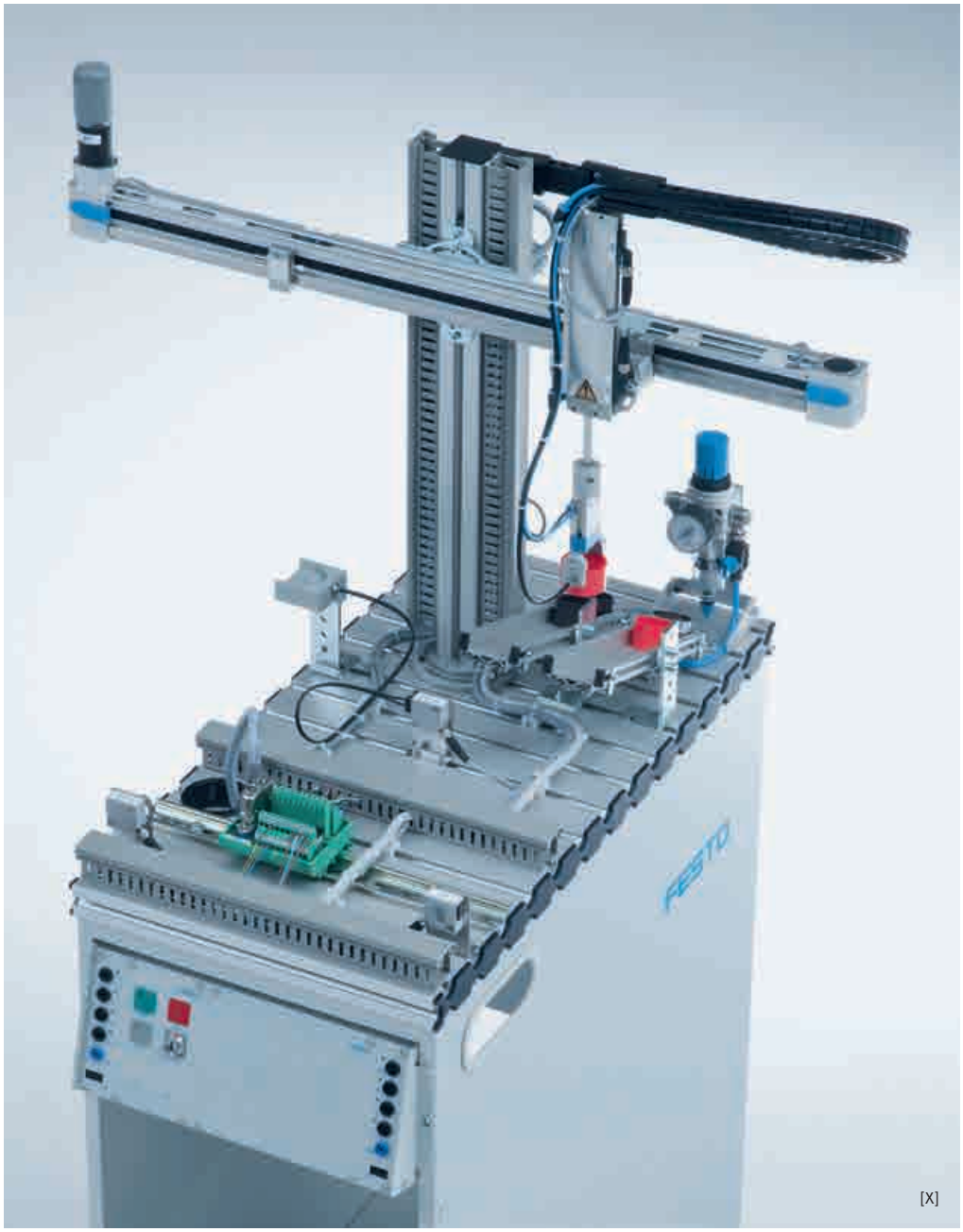

[X]

Function
The Handling station, electrical, is equipped with a flexible two-axis handling device. Workpieces inserted into the holder are detected by an optical diffuse sensor. The handling device picks up the workpieces from there with the aid of a pneumatic gripper. The gripper is equipped with an optical sensor which differentiates between “black” and “non-black” workpieces. The workpieces can be placed on different slides according to this criterion. Other sorting criteria can be defined if the station is combined with other stations. Workpieces can also be transferred to a downstream station.

Good example:
Modular handling system from Festo
The Handling station, electrical, utilizes industrial handling components. An electrical linear axis with DC motor allows fast positioning, including to intermediate positions. A flat linear cylinder with end-position detection serves as the lifting cylinder for the Z axis. A modern pneumatic linear gripper is mounted on the lifting cylinder. The optical sensor integrated into the jaw of the gripper recognizes the workpieces.

Project exercise:
New requirements – different grippers
The PicAlfa module, electrical, is highly flexible: stroke length, inclination of the axes, arrangement of the end-position sensors and the installation position can all be adjusted. This enables the station to be adapted for a broad range of handling tasks without the use of additional elements – an ideal project for advanced trainees.

The valve terminal in the electric PicAlfa module is equipped with two individual single-solenoid valves. This makes it possible to carry out simple extensions, such as adding a stacking machine.

 [X] Illustration includes accessories

Handling station electrical, mounted	**567203**
Kit Handling station electric	**567256**

Additional equipment, also order:

MPS trolley, 700 x 350	8033590
Control console, SysLink	195764
EduTrainer Universal ➔ Pages 87 – 95	

Recommended accessories:

Simulation box, digital	170643
Workpiece set “Cylinder bodies”	167021
Workpiece set “For cylinder assembly”	162239

Technical data
– Operating pressure 400 kPa (4 bar)
– Power supply 24 V DC
– 8 digital inputs
– 7 digital outputs

Training aims for project work
Mechanical:
– Mechanical set-up of a station
Pneumatics:
– Installation of tubing for pneumatic components
– Pneumatic grippers
– Pneumatic linear drives
Electrical:
– Correct wiring of electrical components
Sensors:
– Correct application of limit switches
PLC:
– Programming and application of a PLC
– Control of a handling device
Drive technology:
– I/O actuation of drive controllers
Commissioning:
– Commissioning of electrical axes
– Commissioning of the entire sequence
– Optimization of cycle time
– Safety in the event of loss of pneumatic or electrical power

Recommended training media
– WBT Actuators – DC motor

– WBT Safety engineering
– WBT Electropneumatics
– Mechatronics Assistant

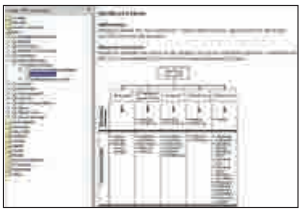

– Design and simulation program FluidSIM® Pneumatics
– Textbook Programmable logic controllers, Basic level

PicAlfa module, electrical
Universal 2-axis handling device for “Pick&Place” tasks. Stroke length, inclination of the axes and arrangement of the limit switches and mounting position can be adjusted. All components for activating the module are on the support profile.

Order no.	**567255**

Valve terminal – Smart Cubic
The miniaturized valve terminal for almost any application. The Smart Cubic has a highly compact design with sufficient volumes for miniaturized drives in the electronics industry, and is optimized for Festo miniature drives.
– Multi-pin cable D-Sub, 15-pin
– Valve positions: 2 x 5/2-way monostable, 1 x 5/2-way bistable

Order no.	**572782**

Multi-pin plug distributor
For connecting up to 8 sensors with a 3-pin Connector M8.
– Operating voltage range: 10 – 30 V DC
– Acceptable current load per slot: 1 A
– Total acceptable current load: 4 A
– Including multi-pin cable D-Sub, 15-pin

Order no.	**572783**

Fluidic Muscle Press station

Powerful

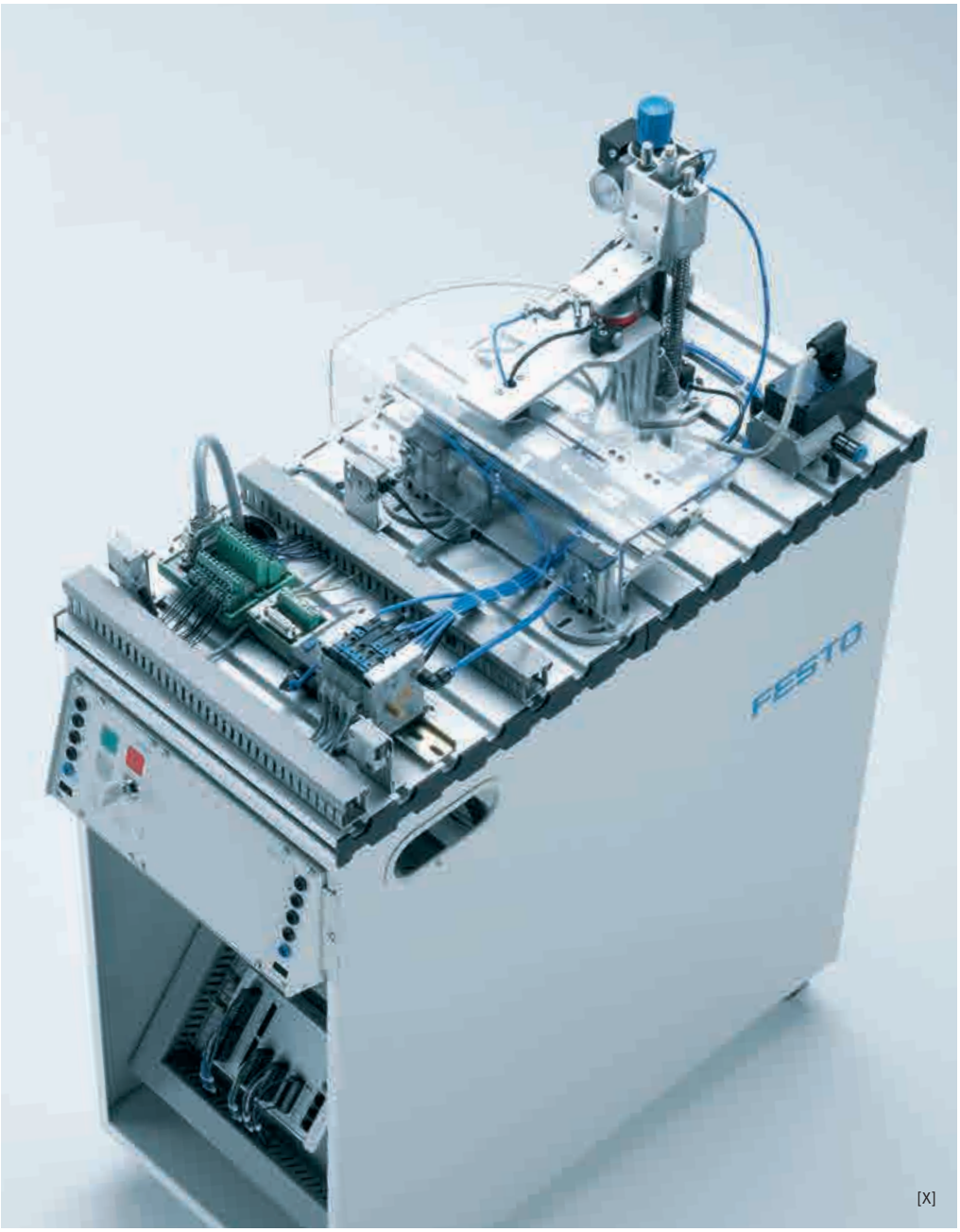

[X]

Function
The Fluidic Muscle Press station presses workpiece inserts into the housings. The rotary/linear actuator (transfer device) moves the housing with the insert placed on it under the press. The pneumatic muscle performs the pressing operation. The finished workpiece is then transported to the transfer position using the rotary/linear actuator. An optical diffuse sensor is attached to the arm of the actuator for sensing the workpiece. The pressing pressure is monitored and displayed using the analog pressure sensor. The press-in speed and depth can be varied both manually – via throttle and pressure regulator – and electronically – via the proportional pressure regulator.

State of the art
The latest components, such as the pneumatic muscle, the linear drive SLG or the semi-rotary actuator DRQD with adjustable mid-position enable students to experience the industrial automation technology of tomorrow today.

Option:
Analog value processing
The analog pressure sensor provides an analog signal and also a binary signal with the help of the programmable switching points. The analog signals are available at a separate terminal – allowing connection to the simulation box or a PLC with an analog module. This enables you to use the station with a controller with or without analog processing. Both variants are supported for actuation of the pneumatic muscle: Analog via the proportional pressure regulator or binary via a directional control valve.

 [X] Illustration includes accessories

Fluidic muscle press station, mounted	**535248**
Kit Fluidic muscle press station	**538707**

Additional equipment, also order:

MPS trolley, 700 x 350	8033590
Control console, SysLink	195764
EduTrainer Universal ➔ Pages 87 – 95	

Recommended accessories:

Simulation box, digital/analog	526863
Workpiece set “Housings”	534619
Workpiece insert “Clock”	534621
Workpiece insert “Thermometer”	534622
Workpiece insert “Hygrometer”	534623

Technical data
– Operating pressure 600 kPa (6 bar)
– Power supply 24 V DC
– 8 digital inputs
(1 analog input can additionally be used)
– 7 digital outputs
(1 analog output can additionally be used)

Training aims for project work
Mechanical:
– Mechanical set-up of a station
Pneumatics:
– Application of linear slide units
– Application of semi-rotary drives
– Application of pressure regulators
– Application of pneumatic muscle
Electrical:
– Correct wiring of electrical components
Sensors:
– Application of end-position sensors and optical diffuse sensors
– Mode of operation and applications of analog sensors using the example of an analog pressure sensor
PLC:
– Programming and application of a PLC
– Analog signal processing

Recommended training media
– WBT Sensor technology 1

– Mechatronics Assistant

– Design and simulation program FluidSIM® Pneumatics
– Textbook Programmable logic controllers, Basic level
– Textbook Proximity sensors
– Virtual process environment CIROS®

Rotary/linear transfer module
The module contains a precision SLG linear slide unit with adjustable end stops. The rotary movement is realized using a DRQD semi-rotary drive. This permits rotation of 90° and 180°. All end positions are sensed by means of sensors.

Order no.	**535249**

Fluidic Muscle Press module
The module is used to press workpiece inserts into the housing. The press is actuated using a pneumatic muscle. The module contains a manually adjustable pressure regulator that can be used to adjust the press-in depth. The press-in speed is adjusted via supply air flow control.

Order no.	**535251**

Pressure sensor
Pressure sensor with LCD display, measuring range 0 – 10 bar with analog output 0 – 10 V and PNP switch output, selectable via teach-In. Supplied complete with connection cable.

Order no.	**679598**

Analog terminal
Analog signals are passed to a special analog terminal with a 15-pin Sub-D socket. To wire up and connect analog signals.

Order no.	**526213**

Punching station

Hydraulics power

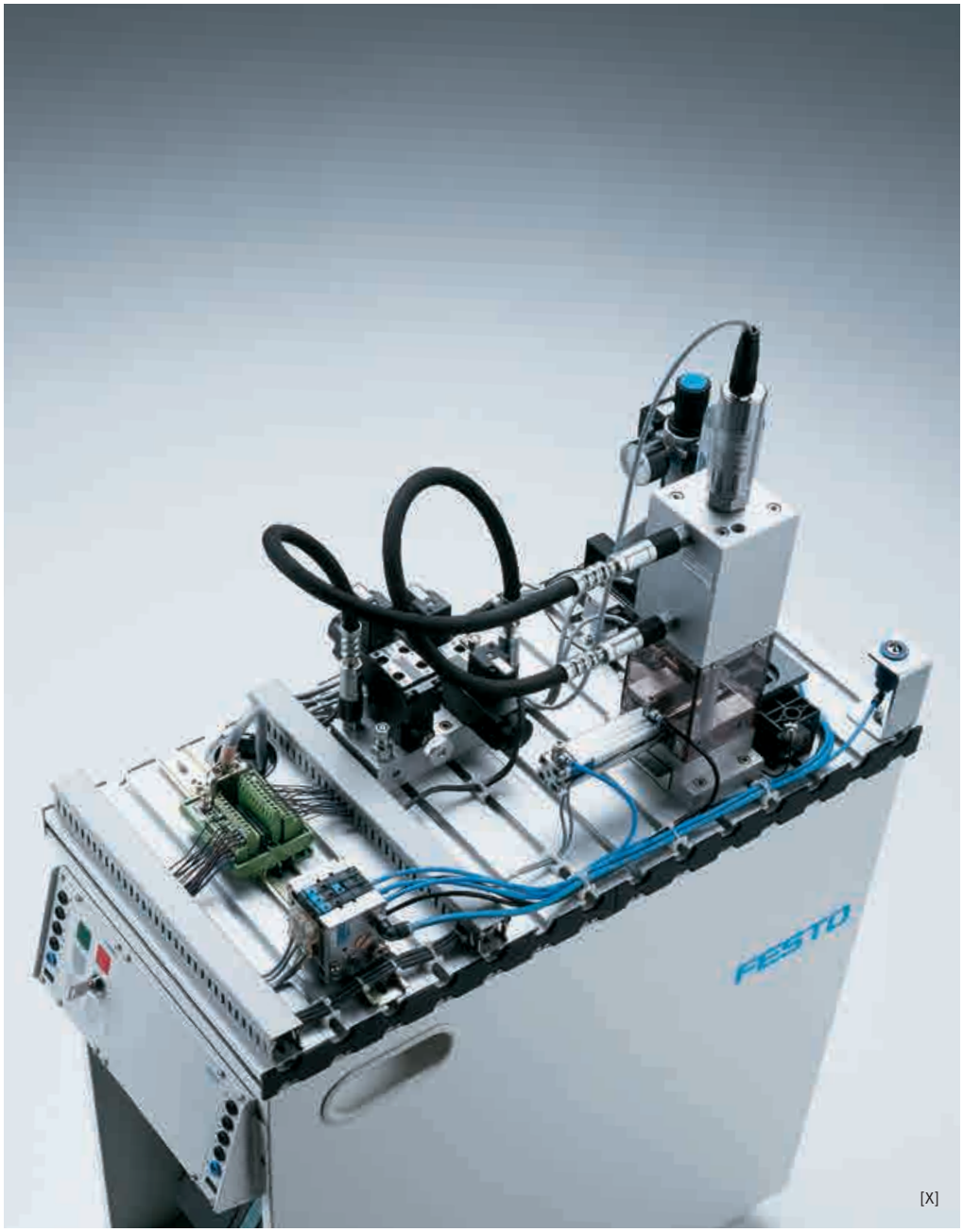

[X]

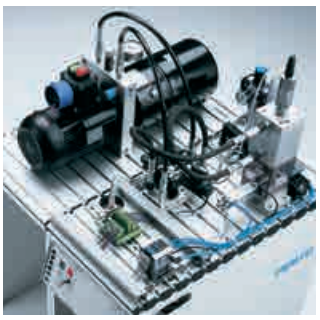

Function
The plastic cylinder end caps for the cylinder bodies are supplied without a hole for the piston rod. This station has the task of punching the hole. A double-acting cylinder ejects the semifinished cap from the stacking magazine. A second cylinder brings the cap into the punch. After punching, this second cylinder ejects the finished cap.

Topic:
Pressure and force
Hydraulics plays a key role in mechatronic systems when great forces are required. It is an essential part of drive and control technology for mechatronics training.

The pressure for the punching process is supplied by the hydraulic power unit. A pressure switch on the punch itself ensures the correct pressure for the punching process.

 [X] Illustration includes accessories

	Punching station, mounted	**195787**
	Kit Punching station	**526887**

Additional equipment, also order:

2x	MPS trolley, 700 x 350	8033590
	Control console, SysLink	195764
	EduTrainer Universal ➔ Pages 87 – 95	

Recommended accessories:

	Simulation box, digital	170643
	Workpiece set “Cylinder end caps”	162240
	Hydraulic power pack with a constant-displacement pump, 230 V	152962
	Hydraulic oil (DIN 51524), HLP22, 10 Liters	192215
2x	Hose line with quick release couplings, 1500 mm	159386
	Aluminum profile plate, 700 x 350 mm	162386

Technical data
– Operating pressure hydraulics 6 MPa (60 bar)
– Operating pressure pneumatics 600 kPa (6 bar)
– Power supply 24 V DC
– 8 digital inputs
– 8 digital outputs

Training aims for project work
Mechanical:
– Mechanical set-up of a station
Hydraulics:
– Set-up of a hydraulic control system
– Commissioning a rapid traverse feed circuit
Pneumatics:
– Installation of tubing for pneumatic components
– Application of pneumatic linear drives
Electrical:
– Correct wiring of electrical components
Sensors:
– Application of inductive and optical sensors
– Application of pressure switches
PLC:
– Programming and application of a PLC
– Structure of a PLC program
– Programming of operating modes
Troubleshooting:
– Systematic troubleshooting in a production system

Recommended training media
– WBT Hydraulics

– WBT Electrohydraulics
– Mechatronics Assistant
– CIROS®
– Design and simulation program FluidSIM® Hydraulics

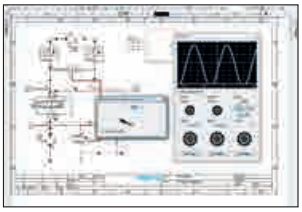

– Textbook Hydraulics, Basic level
– Textbook Programmable logic controllers, Basic level

Hydraulic punch station
The Hydraulic punch module consists of a hydraulic cylinder (diameter 32) with guides that punches the hole in the end cap of a workpiece for assembly. The moving part is protected against manual intervention via plexiglass.

Order no.	**162352**

Stacking magazine module (end caps)
Separation of the cylinder caps for assembly. This module cannot be used for separation of symbolic workpieces or the body.

Order no.	**162353**

Conveyor module

New

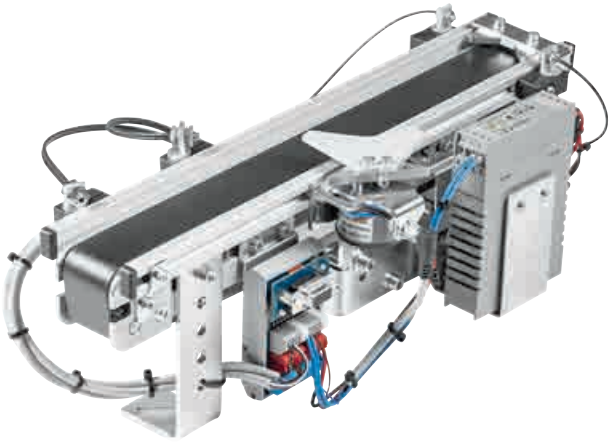

The Conveyor module is intended for mounting on a profile plate, profile foot or slotted mounting frame with freely positionable DC motor. It is suitable for transporting and separating workpieces with a diameter of 40 mm (e.g. “Bodies” or “Cylinder for assembly” workpiece sets). The module is supplied fully assembled.

Training content
– Belt control system
– Sensors
– Reading circuit diagrams
– Buffering and separating

Recommended training media
Tec2Screen® Courses
– Commissioning
– Logic programming

Technical data
– Power supply: 24 V DC
– Maximum workpiece width: 40 mm
– Length: 300, 350 or 700 mm
– Conveyor height above profile: approx. 117 mm
– 3 digital sensors
– 3 digital actuators

Scope of delivery
Conveyor module including:
– DC motor: 24 V DC/1.5 A with motor controller right/left
– 2 diffuse sensors
– Light barrier
– Mini I/O terminal
– Mounting material for profile plate
– Feed separator/stopper, electric

Conveyor module, DC motor integrated:

300 x 40 mm	**8033135**
350 x 40 mm, see picture ➔ see illustration	**8032692**

Conveyor module, with motor flange:

350 x 40 mm	**8037644**
700 x 40 mm	**8037645**

Recommended accessories for the conveyor module, with motor flange:

DC motor controller for clockwise/anti-clockwise rotation	567245
DC motor	532941
Mounting materials	On request
AC motor	On request

Stacking magazine module

New

1

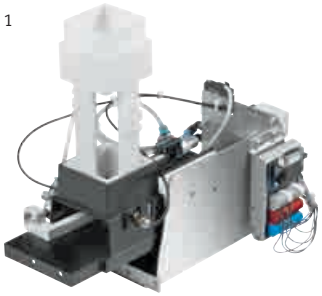

2

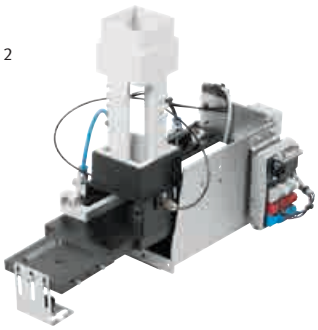

The Stacking magazine module separates workpieces or end caps. A double-acting cylinder pushes the workpiece at the bottom out of the gravity-feed magazine. The cylinder position is detected electrically by inductive, three-wire sensors. The speed with which the cylinder extends and retracts can be infinitely adjusted via one-way flow control valves. Through-beam sensors or diffuse sensors can be attached to the magazine. The magazine offers mounting options for installation on a profile, profile plate or at conveyor height via an optional adapter. It is possible to eject products from three magazines at a common position. The module is supplied completely assembled.

Training content
– Basic principles of pneumatics
– Sensor technology: magnetic limit switches
– Sensor technology: opto-electrical sensors
– Connecting tubing and wiring
– Reading circuit diagrams

Technical data
– Operating pressure: 600 kPa (6 bar)
– Power supply: 24 V DC
– 3 digital sensors
– 1 digital actuator
– Length with workpiece holder: 310 mm
– Length without workpiece holder: 240 mm

Scope of delivery
– Plastic injection-molded cylinder body and ejector
– Magazine tube for end caps and cylinder bodies with diameter/edge length = 40 mm
– Mini I/O terminal
– 5/2-way single solenoid valve
– Double-acting cylinder
– 2 magnetic limit switches
– Through-beam sensor
– Mounting accessories for profile plate
– Workpiece holder (only with order no. 8032171)

Recommended training media
Tec2Screen® Courses
– Commissioning
– Logic programming

1 Without workpiece holder	**8032172**
2 With workpiece holder	**8032171**

Recommended accessories:

Adapter for Stacking magazine module	8032173
MPS slotted mounting plate	8038504
PA workpiece set	554301
15-pin D-sub cables: plug connector – plug connector, 2.0 m	8033584
15-pin D-sub cables: plug connector – open, 2.0 m	8033586
C Interface	8025738

Pick&Place module

New

The Pick&Place module is a universal, 2-axis handling device for Pick&Place tasks. The position of the end-position switches, as well as mounting position and height, can be adjusted on this module. The module is supplied complete with vacuum generator, pressure switch, vacuum filter and suction gripper, valve terminal, pressure limiter and electrical interface. In another version, a parallel gripper is used instead of vacuum technology.

Training content
- Basic principles of pneumatics
- Sensor technology: magnetic limit switches
- Connecting tubing and wiring
- Reading circuit diagrams
- Getting to know handling systems
- Vacuum technology/gripper technology

Technical data
- Operating pressure: 600 kPa (6 bar)
- Power supply: 24 V DC
- 4 digital sensors
- 4 digital actuators
- Stroke length, X-axis: 80 mm
- Stroke length, Z-axis: 50 mm
- Pick&Place unit, height-adjustable
- Pressure limitation along the Z-axis

Scope of delivery
- Mini I/O terminal
- Valve terminal with 2x 5/2-way single solenoid valves and 1x 5/2-way double solenoid valve
- 2 double-acting cylinders with guide
- 3 magnetic limit switches
- Mounting accessories for profile plate
- Vacuum switches, Venturi nozzle, soft and hard suction cups (only with order no. 8031659)
- Parallel gripper (only with order no. 8031660)

with vacuum technology ➔ see illustration	**8031659**
with parallel gripper	**8031660**

Recommended accessories:

MPS slotted mounting plate	8038504
PA workpiece set	554301
15-pin D-sub cables: plug connector – plug connector, 2.0 m	8033584
15-pin D-sub cables: plug connector – open, 2.0 m	8033586
C Interface	8025738

Packaging module

New

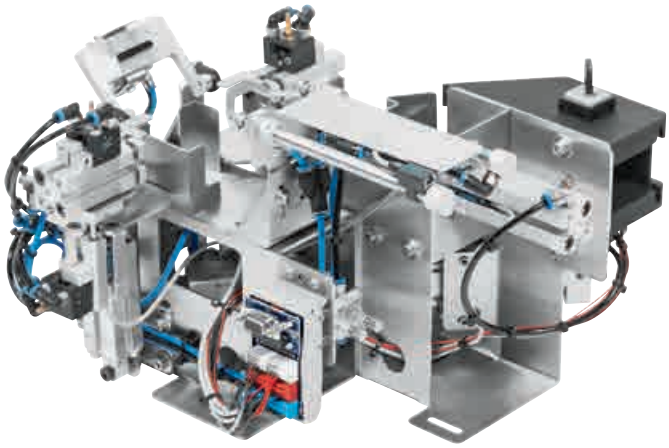

The Packaging module is responsible for handling the boxes. The thrust cylinder separates and unfolds the boxes from the magazine. The guide cylinder unfolds the upper section of the box, pushes the closing flap and then fixes the box lid by advancing the stop cylinder to lower the workpiece into it afterwards. As soon as the provided box is filled and the guide cylinder is moved into the initial position, the box can be sealed with the folding mechanism. The sealed box can then be removed.

Technical data
– Power supply: 24 V DC
– Operating pressure: 600 kPa (6 bar)
– Square/round workpiece dimensions: max. 40 mm
– Box dimensions (L x W x H): 48 x 42 x 50 or 60 mm
– Interfaces: 15-pin D-Sub-HD
– 4 digital sensors
– 4 digital actuators

Scope of delivery
– Module fully assembled and set
– Sensors: 4x reed contact
– Valve: 4x 5/2-way valve
– Mounting material for profile plate

Technical datasheet
– 50x box size 1
– 50x box size 2

Order no.	**8043505**

Recommended accessories:

MPS slotted mounting plate	8038504
15-pin D-sub cables: plug connector – plug connector, 2.0 m	8033584
15-pin D-sub cables: plug connector – open, 2.0 m	8033586
C Interface	8025738
Box size 1 (50 pieces) (L x W x H): 48 x 42 x 50 mm	8064300
Box size 2 (50 pieces) (L x W x H): 48 x 42 x 60 mm	8064301

Two-axis handling module with a stepper motor

New

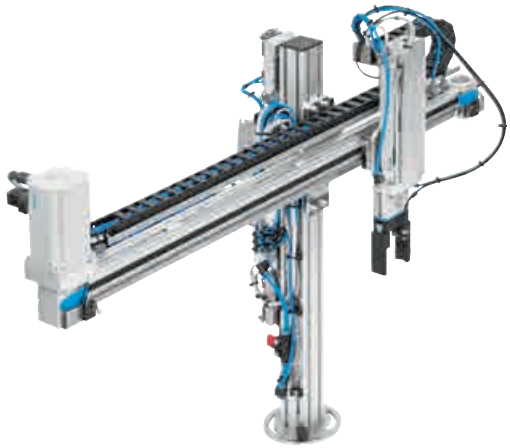

The two-axis handling module with a stepper motor can be used to handle workpieces and boxes. The X-axis is implemented via an electromechanical drive. The stepper motor is actuated by a controller. This makes the positioning of the axis very precise and easy to configure. The Z-axis is implemented via a guided, pneumatic cylinder.

The integrated pneumatic mini stop allows the upper and lower end position and a mid-position to be approached. The electrical interfaces as well as the valve manifold and the stepper motor-controller are available on the module.

Technical data
– Power supply: 24 V DC
– Operating pressure: 600 kPa (6 bar)
– Square/round workpiece dimensions: max. 40 mm
– Stepper motor for motor controller
– X and Z-axis adjustable at an angle of 15°
– Stroke of the X-axis: 600 mm
– Stroke of the Z-axis: 100 mm
– Interfaces: 2x 15-pin D-Sub-HD
– 8 digital input signals
– 7 digital output signals

Scope of delivery
– X-axis with belt drive
– Z-axis with guided cylinder
– Stepper motor
– 2 roller lever switches for deactivating the X-axis
– Diffuse sensor
– Gripper jaws for the workpiece and box
– 2x mini I/O terminal
– Valve: 4x 5/2-way valve (monostable)
– Mounting material for profile plate
– Technical datasheet

Order no.	**8049257**

Recommended accessories:

MPS slotted mounting plate	8038504
2x 15-pin D-sub cables: plug connector – plug connector, 2.0 m	8033584
2x 15-pin D-sub cables: plug connector – open, 2.0 m	8033586
C Interface	8025738

Programming module

New

The Programming module is used to program the EasyKit microcontroller system. The module consists of a control unit with touch panel, a workpiece guide with a double-acting loading cylinder, an alignment unit with a 24 V DC motor and a pneumatic positioning programming plug with 6 contact pins.

The control unit (embedded controller) controls the internal processes of the module and has interfaces to communicate with a PLC. The configuration of the operating mode and the display of the current status can also be implemented via the integrated touch panel.

The module can be loaded by hand, by a handling system or an industrial robot. The fixture is used for automatic loading. The module can be mounted on a profile or slotted mounting plate and to a MPS® Conveyor module or to a transfer conveyor with a mounting kit available separately.

The module is supplied fully assembled.

Technical data
- Power supply: 24 V DC
- Operating pressure: 600 kPa (6 bar)
- Embedded controller with 10.9 cm touch panel
- Alignment motor: 24 V DC/0.13 A
- Square/round workpiece dimensions: max. 40 mm
- Interfaces: 15-pin D-Sub-HD, USB, TCP/IP
- 6 digital inputs
- 4 digital outputs

Scope of delivery
- Control unit with touch panel
- Workpiece guide with double-acting loading cylinder
- Alignment unit with electric motor
- Positionable programming plug with 6 contact pins
- Valve: 5/2-way monostable solenoid valve, 5/3-way solenoid valve, pressure regulator
- 4x solenoid limit switches, diffuse sensors, capacitive proximity sensor
- Workholder
- Mounting material for profile plate
- 2x EasyKit microcontroller systems

Order no.	**8046521**

Recommended accessories:

MPS slotted mounting plate	8038504
15-pin D-sub cables: plug connector – plug connector, 2.0 m	8033584
15-pin D-sub cables: plug connector – open, 2.0 m	8033586
C Interface	8025738
EasyKit microcontroller system	8049530

RFID module

New

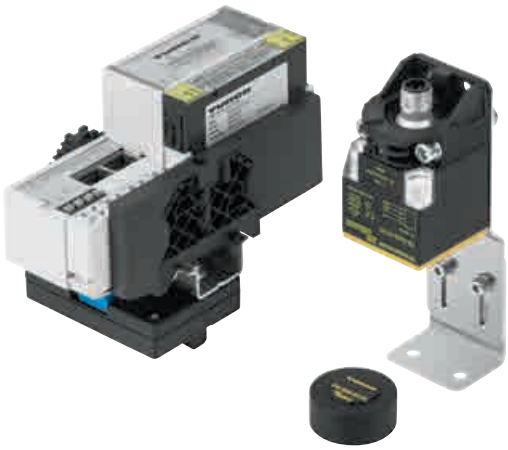

The RFID module is suitable for use in MPS® conveyors or as an individual module for use of slot or profile plates.

RFID (identification using electromagnetic waves) refers to a technology for transmitter/receiver systems for automatic and touchless identification and localization of objects via radio waves.

The RFID system consists of a transponder/tag on or in an item, which contains an identification code, and a read/write head for reading or writing this identifier.

Technical data
- Power supply: 24 V DC
- Supported protocols: Modbus, EtherNet/IP, PROFINET
- H-rail mounting for basic functional module
- Sensor mounting to belt guide rail

Scope of delivery
- Network interface
- Basic functional module with extension module for 2 RFID write/read heads
- RFID write/read head including connecting cable (1 piece)
- Mounting material for basic functional module (QuickFix) and for sensor to profile plate and guide rail of MPS® Conveyor
- 10x RFID tags with tool inserts for order no. 554301
- Technical datasheet

Order no.	**8063388**

Recommended accessories:

MPS slotted mounting plate	8038504
RFID R/W head with foot mounting	8063437
RFID interface for 2 RFID write/read heads	8063438
RFID memory 128 kb (10 piece) with insert	8063850
RFID memory 128 kb (10 piece)	8063848

Safety engineering

MPS® module
Safety engineering holder system
This mounting kit for MPS safety engineering can be used to optimally mount the MPS® modules door, door with active bolt, light curtain and the MPS® control console to any MPS® station.
– Horizontal angle
– 19” front cover and short cable duct
– Assembly instructions

Order no.	**549849**

Recommended training media, also order:

Training documentation
“The safe system” ➔ Page 66

WBT Safety engineering ➔ Page 21

MPS® module
Light curtain
Contactless light curtains protect operating personnel against undesired or unintentional entry into the danger zones of technical systems, such as presses, robot inserting stations, transfer lines and palletizing systems.

The MPS® module light curtain is used to extend any MPS® station in the area of safety engineering and is mounted on the MPS® module safety engineering holder system. The module consists of a transmitter and a receiver, mounted opposite one another. The infrared LEDs on the transmitter emit brief light pulses that are received by the receiver diodes.
– Light curtain with transmitter and receiver
– Connecting cable (5 m)

Technical data
– Module size (H x W x D): 313 x 34 x 30.7 mm
– Supply voltage: 24 V DC
– Maximum switching current: 500 mA per OSSD
– Wavelength: 650 nm
– Protection field height: 300 mm
– Resolution: 14 mm
– Range: 0.15 m – 10 m

Order no.	**549850**

Suitable here:
MPS module holder system

Order no.	549849

Safety relay from Pilz

Order no.	573283

19” emergency stop module (9 HP)

Order no.	573860

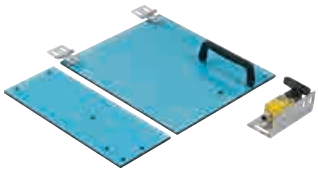

MPS® module
Door
According to directive DIN EN ISO 12100, Machine Safety, all movable parts on machines must be secured with protective devices. The MPS® safety engineering product range is ideal as part of training on this subject.

The door includes a safety switch and can be mounted on any MPS® station using the MPS® module safety engineering holder system.

As soon as the protective device is opened, the N/C contacts on the safety switch open. The hazardous machine motion is then stopped.
– 2 doors (1x 117 mm high, 1x 260 mm high)
– 1 safety switch with 2 N/C contacts without active locking mechanism
– 1 connecting cable (5 m)

Order no.	**549851**

Suitable here:
MPS module holder system

Order no.	549849

Safety relay from Pilz

Order no.	573283

19” emergency stop module (9 HP)

Order no.	573860

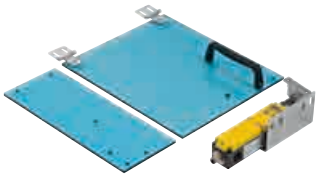

MPS® module
Door with active locking mechanism
According to directive DIN EN ISO 12100, Machine Safety, all movable parts on machines must be secured with protective devices. The MPS® safety engineering product range is ideal as part of training on this subject.

The door includes a safety switch and can be mounted on any MPS® station using the MPS® module safety engineering holder system.

As soon as the protective device is opened, the N/C contacts on the safety switch open. The hazardous machine motion is then stopped.
– 2 doors (1x 117 mm high, 1x 260 mm high)
– 1 safety switch with N/C contact, N/O contact and active locking mechanism (1200 N locking force)
– 1 connecting cable (5 m)

Order no.	**549852**

Suitable here:
MPS module holder system

Order no.	549849

Safety relay from Pilz

Order no.	573283

19” emergency stop module (9 HP)

Order no.	573860

19” request module (3 HP)

Order no.	573861

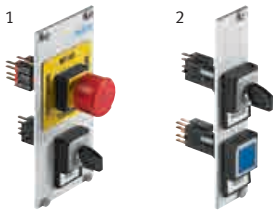

1 **19" emergency stop module (9 HP)**
The 19" emergency stop module (9 modular spacing units) makes it possible to expand the MPS® control panel to include an emergency-stop mushroom actuator and a key-operated reset pushbutton. The module can be connected to a safety relay, an emergency stop PCB or a failsafe PLC with a 2.5 meter long connecting cable. 4 mm plugs are required for direct connection to the emergency stop jumper of an EduTrainer® Universal.

Blank panels are not included in the scope of delivery.

Order no.	**573860**

2 **19" request module (3 HP)**
The 19" request module (3 modular spacing units) makes it possible to expand the MPS® control panel to include a key-operated request pushbutton and a reset pushbutton. The module can be connected to a safety relay with a 2.5 meter long connecting cable.

Blank panels are not included in the scope of delivery.

Order no.	**573861**

1 **Safety relay from Pilz**
The safety switching device fulfills the requirements of EN 60947-5-1, EN 60204-1 and VDE 0113-1, and can be used in applications with:
– Emergency stop pushbuttons
– Safety switches, Light barriers
Forced relay outputs:
– 3 safety contacts (S), undelayed
– 1 auxiliary contact (Ö), undelayed
– 1 semiconductor output
1 contact expansion block, connectable, operating modes can be adjusted via rotary switch.
LED display for:
– Supply voltage
– Input status channel 1 and 2
– Switching status of safety contacts
– Starting circuit
– Error
Plug-in terminals. Connection material included.

Order no.	**573283**

2 **Safety relay from SICK**
The safety switching device can be used in applications with:
– Emergency stop switches
– Safety switches and safety switches with mechanical locking
Cross circuit recognition for dual-channel control. Outputs:
2 N/O contacts, 1 response delayed N/O contact, adjustable from 0.15 – 3 s or 1.5 – 30 s.
– 3 LEDs: supply voltage, C1/C2 relay (undelayed) and C3/C4 relay (delayed)
– Manual reset
– Automatic reset
– Contact expansion for more outputs
Connection material included.

Order no.	**573282**

1 **19" emergency stop panel**
The emergency stop panel allows integration of the emergency stop pushbutton into the control panel. The pushbutton is connected to a EduTrainer® or an emergency stop board via a 2.5 m cable with 2-pin screw-terminal plug.

The emergency off panel can be integrated into the control panel order no. 195764 . A blank panel order no. 534630 is required for installation into the control panel. The blank panel is not included.

Order no.	**534631**

2 **19" blank panel (16 HP) for the control panel**

Order no.	**534630**

3 **Light tower module**
The LED light tower with 3 signal lights (red, yellow, green) shows different statuses of a system and is suitable for all MPS® stations. With protection class IP 65. It is secured to the slotted assembly board with the materials supplied.

Delivery includes a base and a 2 meter connecting cable with open ends for connecting to the I/O terminal of the MPS® station.

Order no.	**549843**

Emergency stop board
The flexible safety concept for the MPS® provides an easy method of switching off components – whether the entire system or parts thereof. The central emergency stop board is part of the safety concept in the Modular Production System and allows you to integrate up to ten MPS® stations into a safety circuit. When combined with emergency stop pushbuttons and/or position switches, it provides a high level of safety. The central emergency stop board can be mounted in the trolley of a station along with a EduTrainer® Universal.

A 4-pin cable (order no. 535245) is required for each station for connection. This cable is not included in the scope of delivery. The connected stations can be switched off via max. 6 emergency stop switches. These emergency stop switches are not included in the scope of delivery.
– Inputs (emergency stop switch) 1 – 6
– Outputs (stations) 1 – 10

Order no.	**195769**

Also order:
Connecting cable, 4-pin, for connecting an MPS® station (EduTrainer® Universal) to the emergency stop board.

Order no.	**535245**

Accessories

New

MPS® trolley, 700 x 350
Compact and mobile – thanks to the trolley. The station is easy to mount on the trolley. Appropriate through-holes in the side and rear panels enable orderly routing of cables. The symmetrical design of the trolley means that there are mounting options on both sides for the control panel, the intermediate shelf and for drawers. A lifting column can be integrated in the center of the trolley to facilitate ergonomic work on the profile plate. There is space for the assembly board for the electrical connections and the PLC rack on both sides of the trolley. The profiles for DIN A4 mounting allow additional EduTrainer® units to be used on the trolley. An optional attachable door protects the equipment inside.

Technical data
Dimensions (H = including castors to top edge of trolley x W x D):
750 x 350 x 700 mm

Scope of delivery
– Trolley including castors
– Intermediate shelf

Without height adjustment

Order no.	**8033248**

With height adjustment

Order no.	**8033590**

MPS® height adjustment
Pure ergonomics. Students can adjust the height to a level that suits them when working with MPS® stations. Simply raise the mounted profile plate, which is infinitely adjustable, upwards. The integrated Bowden cable is used for infinitely adjustable lowering. The MPS® trolley 700 x 350 (order no. 8033248) can be retrofitted with this height adjustment.

Technical data
– Minimum load: 7 kg
– Height in retracted state: 665 mm
– Lift height: 400 mm

Scope of delivery
– Column with adapter plates and Bowden cable
– Mounting accessories for trolley and profile plate

Order no.	**8033591**

1
2

1 **MPS® A4 mounting frame**
The A4 mounting frame expands the MPS® station to provide space for an EduTrainer® in A4 format above the profile plate. Because the EduTrainer® is mounted on the profile plate, it is always at eye level. There is thus space for the PLC in the trolley and for the touch panel in the A4 mounting frame, for example.

Technical data
– Dimensions (H x W outside x D): 626 x 342 x 84 mm

Scope of delivery
– Holder for profiles
– 2 x A4 mounting profiles
– Mounting accessories for profile and profile plate

Order no.	**8033592**

2 **MPS® mounting profile**
The MPS® A4 mounting profile expands the MPS® trolley 700 x 350 to include a space in A4 format. The PLC or assembly board can therefore be hung in the A4 mounting frame.

Order no.	**8033594**

1
2

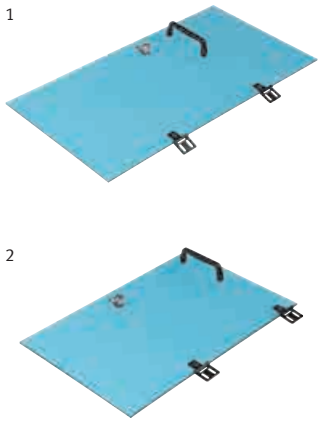

MPS® door
The safety door for the MPS® trolley 700 x 350 is attached to the trolley from the outside. A lock prevents unauthorized opening of the door.

Technical data
– Dimensions when fully closed (H x W): 645 x 334 mm
– Dimensions for trolley with control panel (H x W): 500 x 334 mm
– Can be hinged on right or left

Scope of delivery
– Plexiglas® door
– 2 hinges
– Handle
– Lock with key
– Mounting accessories

1 645 x 334 mm	**8033596**
2 500 x 334 mm	**8033595**

MPS® drawer set
Order on the table. The drawer set expands the MPS® trolley to provide additional storage space. The drawers can be stacked on top of one another or divided between both sides of the trolley. An intermediate shelf covers the drawer from above.

Technical data
Interior dimensions per drawer (H x W x D): 120 x 274 x 300 mm

Scope of delivery
– 2 drawers
– 4 ball bearings
– Intermediate shelf
– Mounting accessories

Order no.	**8033593**

MPS® A4 assembly board
The assembly board is used to mount the various terminals or other components that can be mounted on the H-rail. There are two levels with a height of approx. 95 mm available. The board can be installed in any A4 mounting frame in the MPS® trolley or in the lab table. The board can also be hung in the trolley or attached to the profile plate or the intermediate shelf in the MPS® trolley. The board is fully assembled.

Technical data
Dimensions (H x W x D): 279 x 314 x 40 mm

Scope of delivery
– Assembly plate
– 2 H-rails, 240 mm long
– Cable ducts

Order no.	**8035612**

MPS® slotted mounting plate
For mounting the MPS® modules in order to learn about a particular workplace before it is integrated into an MPS® station. The modules can also be stored safely on the plate.

Technical data
Dimensions (H x W): 297 x 310 mm

Scope of delivery
– Slotted plate
– 4 plastic feet

Order no.	**8038504**

1

2

1 **Cable holder with hook-and-loop fastener (pack of 10)**
Reliable and stable fastener for guiding cables and tubing in electrical and pneumatic installations of plants.

Technical data
– Overall length: 122.5 mm
– Band width: 20 mm
– Contact width: 30 mm
– Contact length: 34 mm

Scope of delivery
– 10 cable holders
– 10 M4 x 15 screws
– 10 T-head nuts for profile plate slot

Order no.	**8034300**

2 **Adapter for Stacking magazine module**
Adapter for mounting the magazine at MPS® conveyor height. Stainless steel sheet bending parts including mounting screws.

Order no.	**8032173**

Accessories

New

1

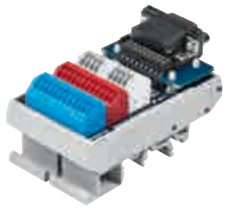

2

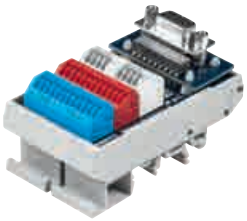

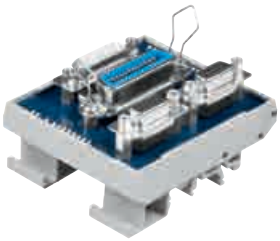

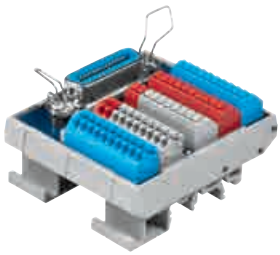

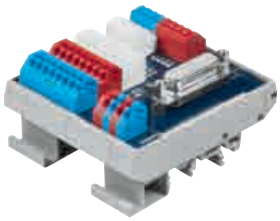

Mini I/O terminal
The mini I/O terminal is the central unit of the MPS® modules. It is used to wire four digital inputs, four digital outputs, two analog inputs and one analog output which are connected to a socket. Contact is established via spring-loaded terminals. LEDs are fitted on the input and output terminals which make it easy to monitor the switching status and enable systematic troubleshooting. The terminal can be mounted on an H-rail.

The terminal is available in two variants:
– 15-pin Sub-D HD socket, straight
– 15-pin Sub-D socket, 90° to the PCB

Technical data
– 24 V/0 V terminals
– Inputs: 4
– Digital outputs: 4
– Analog inputs: 2
– Analog output: 1
– Spring-loaded terminal: 0.2 – 0.5 mm²
– 15-pin Sub-D HD socket
– Status LEDs
– Dimensions (W x D): 45 x 77 mm

Scope of delivery
Terminal with H-rail mounting

1 Straight	**8025740**
2 90° to the PCB	**8025739**

C Interface
Simple Plug and Learn – intelligent connection technology. The design of the system connection enables two modules to be easily connected to a PLC via SysLink. If the module is to be equipped with analog signals, these can be picked off via the 15-pin Sub-D socket.

Technical data
– 24-pin IEEE socket (SysLink)
– 15-pin Sub-D socket
– 2x 15-pin Sub-D HD sockets
– Status LEDs
– Dimensions (W x D): 68 x 77 mm

Scope of delivery
Terminal with H-rail mounting

Order no.	**8025738**

Digital I/O terminal (SysLink)
The I/O terminal is the central unit of the MPS® SysLink concept. It is used to wire eight digital inputs and eight digital outputs which are connected to a socket. Contact is established via spring-loaded terminals. LEDs are fitted on the input and output terminals which make it easy to monitor the switching status and enable systematic troubleshooting. The terminal can be mounted on an H-rail.

Technical data
– 24 V/0 V terminals
– Inputs: 8
– Outputs: 8
– Spring-loaded terminal: 0.2 – 1.5 mm²
– 24-pin IEEE socket (SysLink)
– Status LEDs
– Dimensions (W x D): 68 x 77 mm

Scope of delivery
Terminal with H-rail mounting

Order no.	**8025736**

Analog I/O terminal
Analog signals are routed to a special analog terminal with a 15-pin Sub-D socket. It is used to wire four analog inputs and two analog outputs which are connected to a socket. Contact is established via spring-loaded terminals. LEDs are included on the input and output terminals which make it easy to monitor the status and enable systematic troubleshooting. The terminal can be mounted on an H-rail.

Technical data
– 24 V/0 V terminals
– Current inputs: 4
– Current outputs: 2
– Voltage inputs: 4
– Voltage outputs: 2
– Spring-loaded terminal: 0.2 – 1.5 mm²
– 15-pin Sub-D socket
– Status LEDs
– Dimensions (W x D): 68 x 77 mm

Scope of delivery
Terminal with H-rail mounting

Order no.	**8025737**

IO-Link DA interface
The IO-Link DA interface is the universal interface from modules to different communication/bus systems. An MPS® module is connected via each of the two 15-pin Sub-D HD sockets. The M12 I-Port connection provides communication via IO-Link. Bus coupling modules (CTEU) expand the I-Port interface to include various bus systems. The following modules are currently available: CANopen, DeviceNet, CC-Link, PROFIBUS, EtherCAT. LEDs display the status of the interface. The interface can be mounted in a 19" frame, bolted or on an H-rail.

Technical data
– M12 I-Port IO-Link interface with 24 V/0 V
– 2x 15-pin Sub-D HD sockets (each 4DI/4DO; 2AI/1AO, 24 V/0 V)
– 2 LEDs
– Dimensions (H x W x D): approx. 128 mm x 18 HP x 28 mm

Scope of delivery
Interface with cover, A-coded connecting cable and H-rail mounting

Order no.	**8038559**

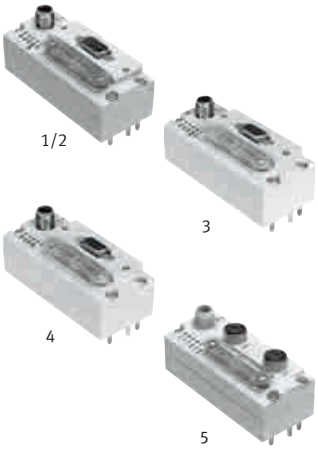

Fieldbus node CTEU
Well connected with the fieldbus node CTEU for valve terminals and the "IO-Link DA Interface". The fieldbus node supports fieldbus-capable modules. The bus node module is therefore a low-cost means of exploring the extensive world of fieldbus protocols, including CANopen, PROFIBUS and DeviceNet. This communication interface is based on the Festo "I-Port" as a universal M12 connection. It can be equipped with the new bus modules CTEU or configured with IO-Link.

Bus node:

1 CANopen*	**8039079**
2 DeviceNet*	**8039078**
3 CC-Link	**1544198**
4 PROFIBUS DP	**570040**
5 EtherCat	**572556**
PROFINET	**2201471**
ASi	**572555**

* Including connecting cable

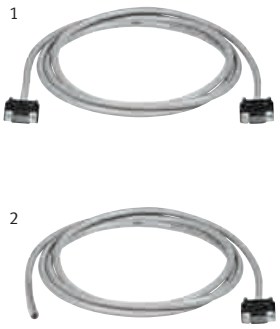

15-pin Sub-D HD cables

1 **Connector – connector**
For the connection of MPS® modules to the C interface via the mini I/O terminal. The I/O data cable is used to connect 24 V/0 V, four digital inputs and outputs as well as two analog inputs and one analog output in parallel.

Technical data
– Wires: 16 x 0.25 mm²
– 15-pin Sub-D HD plug connector

0.5 m	**8033582**
1.0 m	**8033583**
1.5 m	**8042954**
2.0 m	**8033584**

2 **Connector – open**
For the connection of MPS® modules to the digital or analog I/O terminal via the mini I/O terminal. The I/O data cable is used to connect 24 V/0 V, four digital inputs and outputs as well as two analog inputs and one analog output.

Technical data
– Wires: 16 x 0.25 mm²
– 15-pin Sub-D HD plug connector

2.0 m	**8033586**

19" mini I/O 4 mm module
The 19" mini I/O 4 mm adapter module is used for wiring the digital and analog inputs and outputs of an MPS® module using 4 mm safety cables. The MPS® module is connected to the 15-pin Sub-D HD socket. Mounting on an H-rail, a mounting plate included in the scope of delivery, or in a 19" mounting frame is possible.

Technical data
– 4x 4 mm socket for digital inputs
– 4x 4 mm socket for digital outputs with LED indicator
– 2x 4 mm socket for analog inputs
– 1x 4 mm socket for analog outputs
– 2x 4 mm socket for 24 V
– 2x 4 mm socket for 0 V
– 15-pin Sub-D HD socket
– Dimensions (H x W x D): 128.3 mm x 12 HP x 27.7 mm (5 in x 12 HP x 1 in)

Scope of delivery
Interface with cover and H-rail mounting

Order no.	**8040895**

Accessories

Workpiece insert "Thermometer"
Thermometer insert for mounting in housing.
– External diameter: 40 mm
– Mounting diameter: 30 mm

Order no.	**534622**

Workpiece insert "Hygrometer"
Hygrometer insert for mounting in housing.
– External diameter: 40 mm
– Mounting diameter: 30 mm

Order no.	**534623**

Workpiece insert "Clock"
Quartz clock insert for mounting in housing.
– External diameter: 40 mm
– Mounting diameter: 30 mm

Order no.	**534621**

1

2

1 **Workpiece set**
"Cylinder end caps"
Parts set consisting of 50 end caps for cylinder assembly. The end caps do not yet have a hole for the cylinder piston rod. This hole is punched by the hydraulic press station. The hydraulic press station can, however, also be operated with end caps that already have a hole.
Number of end caps: 50

Order no.	**162240**

2 **Workpiece set**
"For cylinder assembly"
The workpiece set consisting of cylinder components for full assembly (body, piston, spring, cover). The cylinders can be assembled and dismantled many times. This kit allows for the complete assembly of 7 black and 7 red plastic cylinders and 7 aluminum cylinders.
– External diameter: 40 mm
– Height (black): 22.5 mm
– Height (red and aluminum): 25 mm

Order no.	**162239**

Workpiece set "Cylinder bodies"
The workpiece set comprises 4 black and 4 red plastic cylinder bodies and 4 aluminum cylinder bodies.
– External diameter: 40 mm
– Height (black): 22.5 mm
– Height (red and aluminum): 25 mm

Order no.	**167021**

1

2

1 **Workpiece set "Housings"**
The workpiece set comprises 4 black and 4 red plastic housings and 4 aluminum housings. The "Clock", "Thermometer" and "Hygrometer" inserts can be mounted in the bodies.
– External diameter: 40 mm
– Internal diameter: 30 mm
– Height: 23 mm

Order no.	**534619**

2 **Workpiece set "Reject housings"**
The workpiece set comprises 3 black and 3 red plastic housings and 3 aluminum housings.
– External diameter: 40 mm
Black workpieces:
– Internal diameter: 30 mm
– Heights: 22/24/25 mm
Red workpieces:
– Internal diameter: 30 mm
– Heights: 26/27/28 mm
Aluminum workpieces:
– Internal diameter: 30.2/30.4/30.6 mm
– Height: 23 mm

Order no.	**534620**

PA workpiece set
To fill liquids into the MPS® PA Bottling station. The workpieces are compatible with the MPS® stations. For example, the pot in the Pick&Place station can be sealed with the lid.

The set comprises:
– 6 housings black
– 6 housings red
– 6 housings silver
– 6 housings transparent
– Diameter outside D = 40 mm
– Height H = 25 mm
– Volume V = 15 ml
– 24 lids black

Order no.	**554301**

Accessories

New

MPS® measuring table
This measuring table fits the MPS® rotary/linear module. The measuring table and analog sensor are height-adjustable. The diffuse sensor supplies both an analog and a binary output signal. This facilitates different training levels. The binary switching output can be adapted to the measurement requirement via a simple teach-in process. The mounting bracket can be used to attach different sensors.

The measuring table is fully assembled and is also suitable for project exercises with other handling devices or a robot.

Technical data
– Height: 665 mm
– 1 digital/analog signal (teach-in)
– Height-adjustable
– Workholder for square/round workpieces: maximum 40 mm

Scope of delivery
– Diffuse sensor
– Profile
– Connecting cable
– Mounting accessories for profile plate

Order no.	**8040204**

Slide 250
The slide is used for feeding or sorting out workpieces.

Technical data
– Length: 250 mm
– Height adjustable: 20 – 117 mm
– High end stop
– Sample application: Sorting station
– Includes mounting accessories for construction on a profile plate

Order no.	**8046639**

EasyKit

Microcontroller system

New

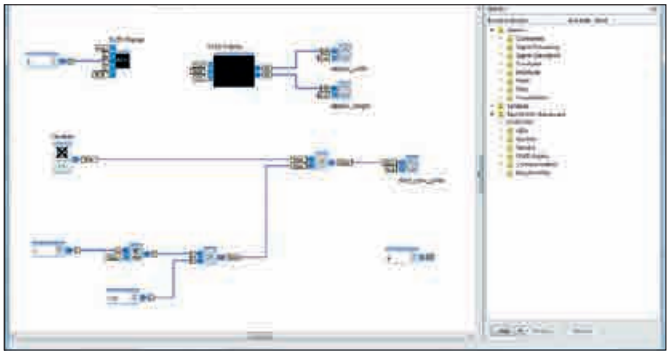

EasyKit, the compact 32-bit microcontroller

The EasyKit microcontroller system has a diameter of 40 mm (1.6 mm) and is pre-equipped with the high-performance 32-bit microcontroller, a monochrome display, a three-axis acceleration sensor, a temperature sensor, LEDs, and a joystick as standard.

The EasyKit workpiece is loaded and programmed via a USB port. An extension plug is used to connect the battery board or other extensions.

The microcontroller board is protected by a transparent housing. The battery board with lithium polymer battery is mounted in a protective housing with an outside diameter of just 40 mm (1.6 in).

Extensions such as an I/O board with six digital and analog input and output channels can be connected instead of or in addition to the battery. The open system concept also permits custom enhancements.

EasyKit is the smart workpiece for the new MPS® generation. The microcontroller system can be reprogrammed to assume a number of functions. This can be a video game, a watch, a pedometer, and much more, depending entirely on the programming.

EasyKit is also prepared for the integration of an RFID tag.

Programming with EasyLab

The EasyLab programming interface for graphical programming has been developed to complement EasyKit. EasyLab is the first model-driven software development for microcontrollers. The sequencer and data flow description methods common in engineering can be used directly in EasyLab, thus providing a convenient way to solve programming problems. EasyLab is available to download free of charge.

Sequencer and data flow

EasyLab offers both of these options. The main program is a sequencer which allows branches and parallel sequences in addition to a linear sequence. Each step is assigned a data flow program as a subroutine. Programs are put together using functional modules with a high abstraction level. This means that the range of modules which can address the input and output channels of the microcontroller goes beyond functional modules alone, ranging from timers, counters, arithmetic and logical functions right up to entire controllers.

Simulation mode

Once the program has been created, it can be tested without any hardware connected in simulation mode. In this mode the user can assign the output values of input modules manually, as these cannot transmit values when no hardware is connected.

Technical data

EasyKit microcontroller board:
- 32-bit microcontroller, 36 MHz cycle rate, 128 kB of program memory, 16 kB of RAM
- Monochrome display (resolution 64 x 48 pixels)
- 2x LED
- Acceleration sensor
- Temperature sensor
- Joystick
- USB: Micro B port

EasyKit battery board:
- Lithium polymer battery
- Battery life: 2 to 4 hours, depending on the application

EasyKit overall dimensions:
- Outside diameter: 40 mm (1.6 in)
- Height with carrier housing: 41.5 mm (1.63 in)

Scope of delivery
- Microcontroller board, extension connector, display, acceleration sensor, temperature sensor, joystick, and USB port in the housing
- Battery board with lithium polymer battery, charging electronics, and housing
- USB connecting cable, 0.6 m (23.6 in)
- Carrier housing
- Data sheet
- Programming software and full documentation available to download

Order no.	**8049530**

MPS® 200 Complete systems

With blended learning package and modular expansion options

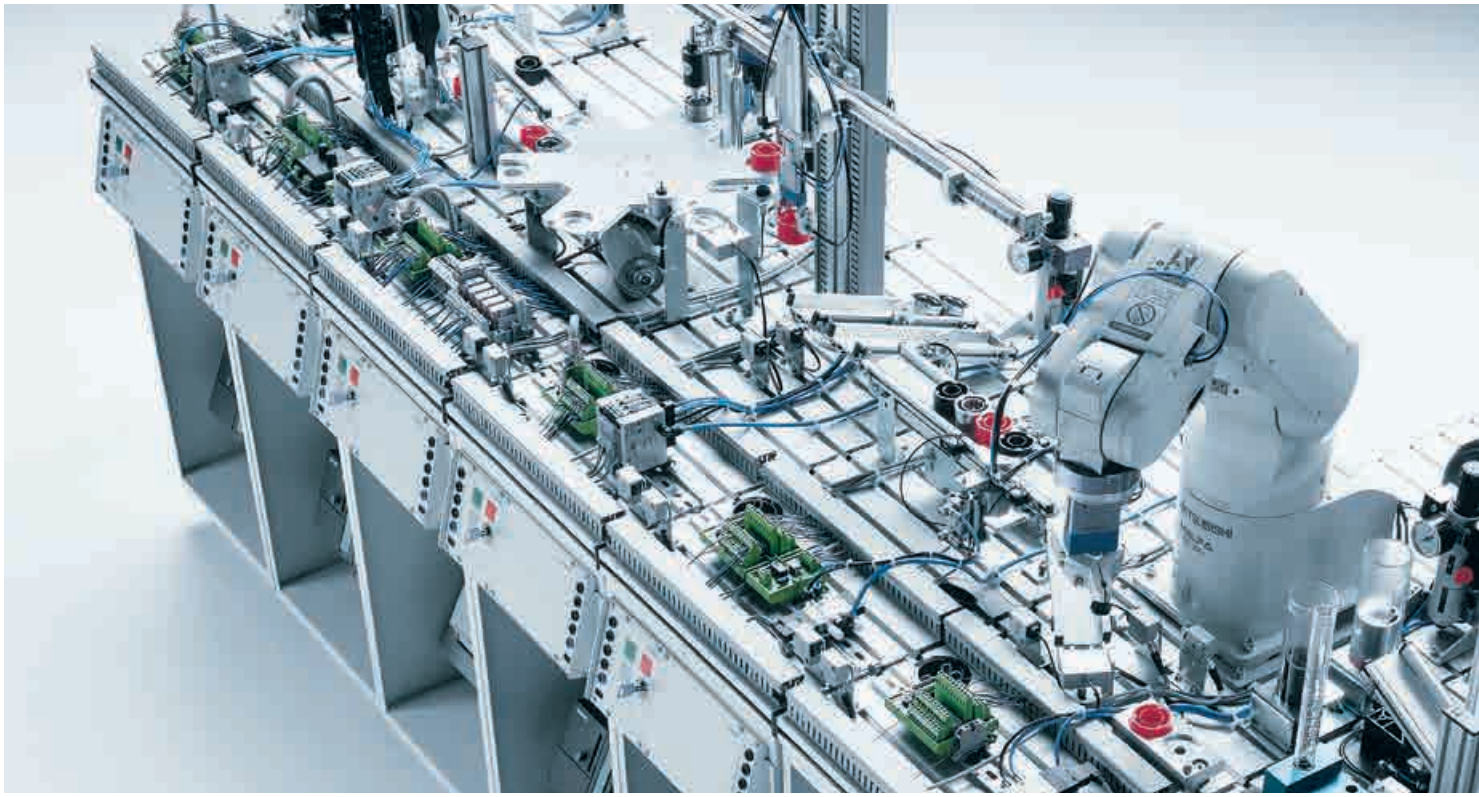

Complete from A to Z

MPS® 200 systems come with all the required accessories, guaranteeing effective training from the very start. They range from small complete systems to entire mechatronic laboratory outfits.

– MPS® stations
– All necessary accessories such as trolleys, power supply units, control console, workpiece set, etc.
– Control package

The new interface concept offers many ways to combine individual stations directly. Various aspects determine the decision as to which combination is required:
– Training content
– Supplementing existing stations
– Your budget

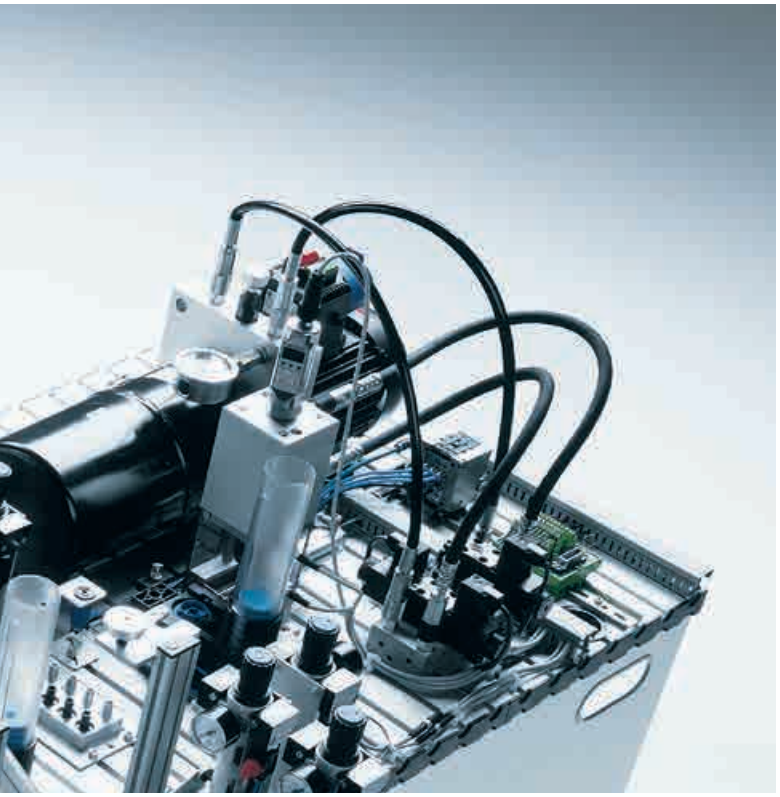

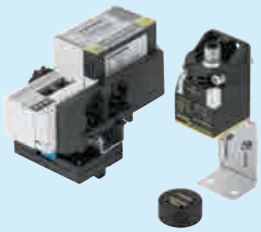

Flexibly expandable

Depending on the planned training content, every MPS® 200 system can be expanded gradually – with stations, modules and components.

Corresponding multimedia training programs and courseware supplement the individual configuration.

Blended Learning package included

Every MPS® 200 system includes a package of web-based training programs, as well as FluidSIM® Pneumatics.

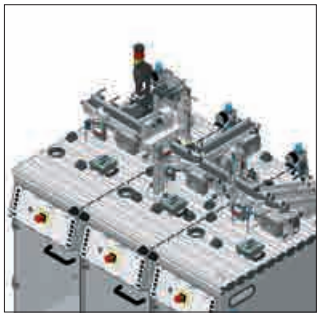

MPS® 203 Basic
From the fundamentals of automation to network technology
Distributing/Conveyor, Joining, Sorting

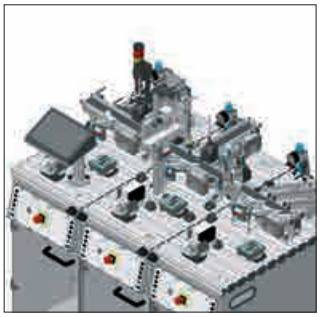

MPS® 203 I4.0
The gateway to Industry 4.0 with MPS®
Distributing/Conveyor, Joining, Sorting

MPS® 202-Mechatronics
The smallest complete unit
Distributing, Sorting

MPS® System 203 Basic

From the fundamentals of automation to network technology

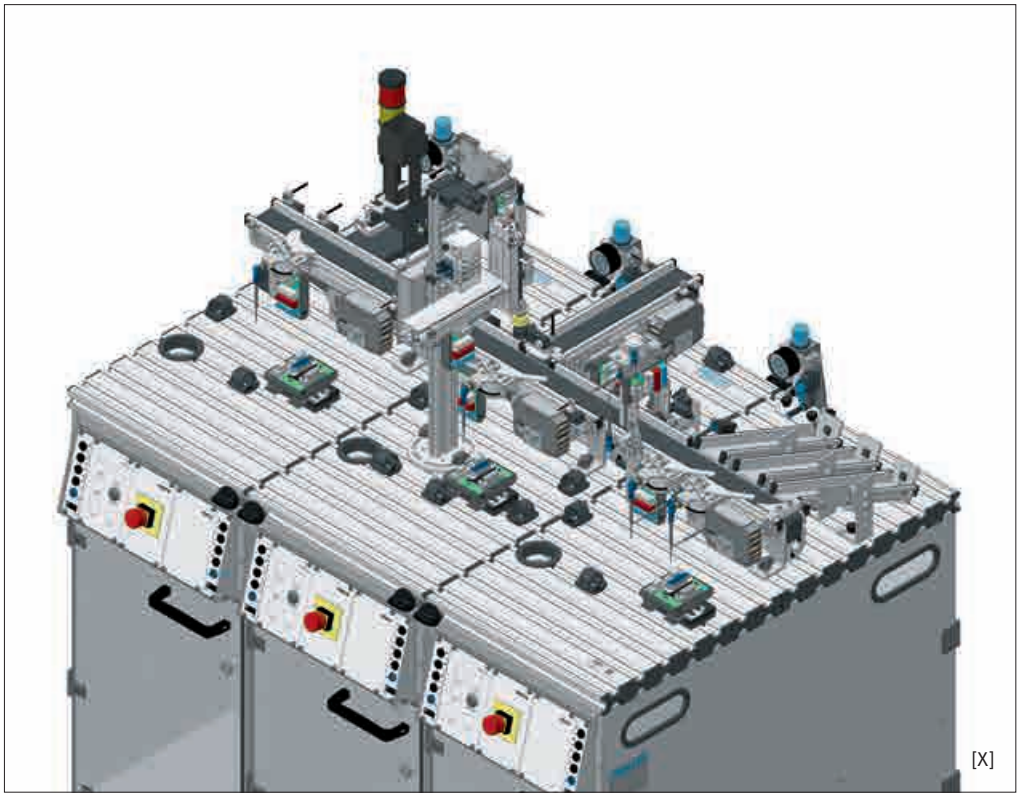

Function
The Stacking magazine module separates workpieces. The Conveyor module brings the individual workpieces to the Joining station. The analog sensor at the stopper above the belt detects the position of the workpiece. If the workpiece is located with the opening facing up, an end cap can be attached with the Pick&Place module. If not, then it cannot. Transport continues to the Sorting station. An optical and an inductive sensor in the Detecting module differentiate the workpieces based on material and color. Electric deflectors then sort the workpieces onto three different slides.

Communication
A station can only pass on a workpiece to the next station if it is ready to process it. In MPS®, this OK signal is received via an I/O interface. That makes it very easy to combine stations and expand them via industrial network technology.

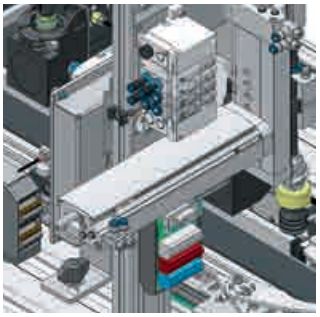

Decentralized participants
Decentralized units are increasingly important in the age of Industry 4.0. The modular approach in MPS® makes this easy to implement in projects. Network nodes or intelligent controls make the system even more flexible.

Controlling and operating
By breaking down the operation and control to individual stations, an individual workstation is created for a project team. The basic operating functions like start, stop, alignment, and a selector switch are available for programming with various controls. LEDs display the status.

Expandable
Extensions for vision systems, touch panels and data acquisition offer even more training content. Even extensions with additional stations are no obstacle and permit extension to larger production plant for training purposes.

[X] Illustration includes additional equipment and accessories

MPS 203 Basic system with Simatic S7-1500	**8063818**
MPS 203 Basic system with Allen-Bradley CompactLogix	**8065524**

PLC control package includes:
SIMATIC S7-1500
3x EduTrainer® Universal with SIMATIC S7-1512C including power supply unit
Allen-Bradley CompactLogix
3x EduTrainer® Universal with CompactLogix 1769 including power supply unit

The MPS 203 Basic system includes the following products:
Stations
Distributing/Conveyor, Joining, Sorting
Accessories
3x height-adjustable trolleys, 3x control console, 1x workpiece set PA (body with end cap), 1x simulation box, 1x signaling column, 3 emergency stop mushroom actuators
Control technology
1x PLC control package, 1x EasyPort
Software
FluidSim E 1L, FluidSim P 1L

Additional equipment, also order:

Programming software ➔ www.festo-didactic.com	
Programming cable ➔ Page 114	

Optional

HMI Siemens	On request
HMI Allen-Bradley	On request
A4 frame for HMI	8059208
Cable for HMI Siemens	On request
Cable for HMI Allen-Bradley	On request
RFID module	8063388
Vision System	On request
Central connection box for power supply	On request

Training content
– Structure of a PLC program
– Programming alternative branches
– Programming an operating mode section and signals
– Set-up and optimization of material flow
– Optimization of setup times
– Linking of stations
– Simple communication
– Material flow control
– Enhanced I/O communication
– Commissioning of complex systems
– Teamwork and coordination
– Optional: HMI, RFID, Vision

Technical data
– Operating pressure: 600 kPa (6 bar)
– Power supply: 24 V DC/4.5 A
– Square/round workpiece dimensions: max. 40 mm
– Dimensions (W x D x H): approx. 1050 x 700 x 1000 mm

Recommended training media
– CIROS®
– WBT Electropneumatics
– WBT GRAFCET
– WBT PLC programming in accordance with IEC 61131
– WBT Pneumatics
– Design and simulation using FluidSIM®
– Textbook Fundamentals of pneumatics and electropneumatics
– Textbooks MPS® Conveyor module, PLC programming, basic level and advanced level
– Textbooks MPS® Pick&Place module, PLC programming, basic level and advanced level

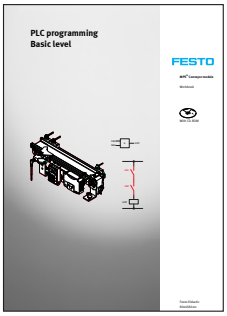

MPS® System 203 I4.0

The gateway to Industry 4.0 with MPS®

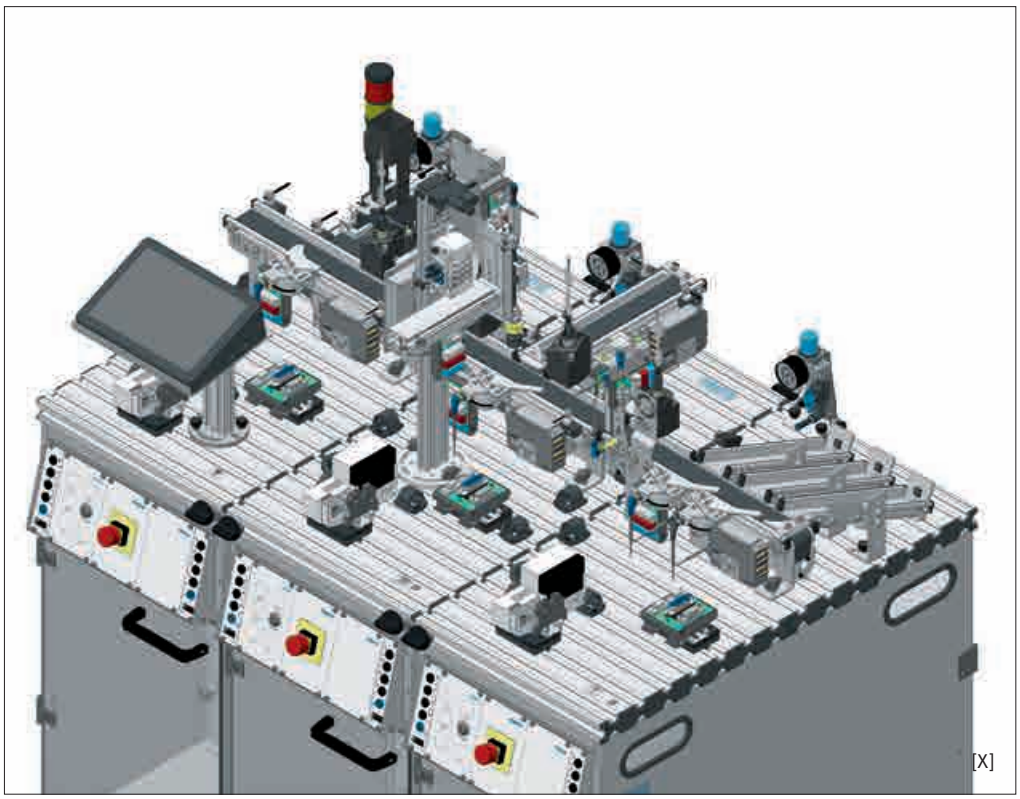

Function
The MPS® 203 I4.0 system is a small production line from the slightly adapted standard stations Distributing/Conveyor, Joining, and Sorting. The entire system is networked and equipped with several RFID write/read heads.

The system produces orders which are generated in the MES system.

In the first station, a workpiece is separated and then written using an RFID sensor.

The subsequent Joining station reads this RFID tag, decides what is to happen with this workpiece based on the order and writes a result back.

In the Sorting station, the workpieces are distributed to three slides depending on the information saved on them.

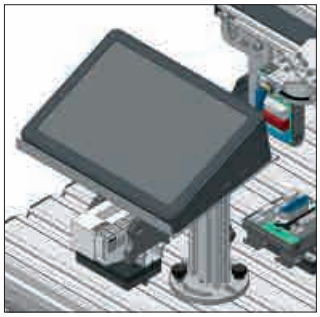

MES/IoT/Big Data
These are the top topics of the digitization trend. Production control, combining systems, modularity, data security and intelligent data processing are just a few important topics for the future, for efficient and individual manufacturing.
MES provides the following services:
– System configuration
– Product configuration/routing
– Order entry and management
– Order tracking
– Order data storage
– Web services for various user groups

Data acquisition and tracking
In this way, you are informed of the location and the status of the product at all times.

Existing MPS® stations can be extended using the RFID module in project work.

Controlling and operating
By breaking down the operation and control to individual stations, this makes them individual workstations for a project team. The basic operating functions and individual applications in IT technology are available.

Expandable
Extending the process with additional stations like Storing and Packaging, or Programming of µ controllers offers even more training content and allows them to be expanded to larger production plants for training purposes.

[X] Illustration includes additional equipment and accessories

MPS 203 I4.0 system with Simatic S7-1500	**8064835**

PLC control package includes:
SIMATIC S7-1500
3x EduTrainer® Universal with SIMATIC S7-1512C including power supply unit

The MPS 203 I4.0 system includes the following products:
Stations
Distributing/Conveyor, Joining, Sorting
Accessories
3x height-adjustable trolleys, 3x control console, 1x workpiece set PA (body with end cap), 1x simulation box, 1x signaling column
Control technology
1x PLC control package, 1x EasyPort, RFID system, switch, touch PC with system MES
Software
FluidSim E 1L, FluidSim P 1L

Additional equipment, also order:

Programming software ➔ www.festo-didactic.com	
Programming cable ➔ Page 114	

Optional

HMI Siemens	On request
A4 frame for HMI	8059208
Cable for HMI Siemens	On request
Vision System	On request
Central connection box for power supply	On request

Recommended training media
– WBT PLC programming in accordance with IEC 61131
– WBT GrafCet
– Textbooks MPS® conveyor module, PLC programming, basic level and advanced level
– Textbooks MPS® Pick&Place module, PLC programming, basic level and advanced level

Training content
– Structure of a PLC program
– Programming alternative branches
– Programming an operating mode section and signals
– Set-up and optimization of material flow
– Optimization of setup times
– Linking of stations
– Material flow control
– Enhanced I/O communication
– Commissioning of complex systems
– Teamwork and coordination
– RFID technology
– Modularity
– Network technology
– Condition monitoring:
  Big data
  Preventive maintenance
  Simple energy measurement, light
– Web services:
  Mobile devices
  Push email
– MES light:
  Order entry
  System configuration
– Local control, workpiece and data storage medium
– Optional: Extensions with HMI, Vision

Technical data
– Operating pressure: 600 kPa (6 bar)
– Power supply: 24 V DC/4.5 A
– Square/round workpiece dimensions: max. 40 mm
– Dimensions (W x D x H): approx. 1050 x 700 x 1000 mm

MPS® 202 – Small but complete

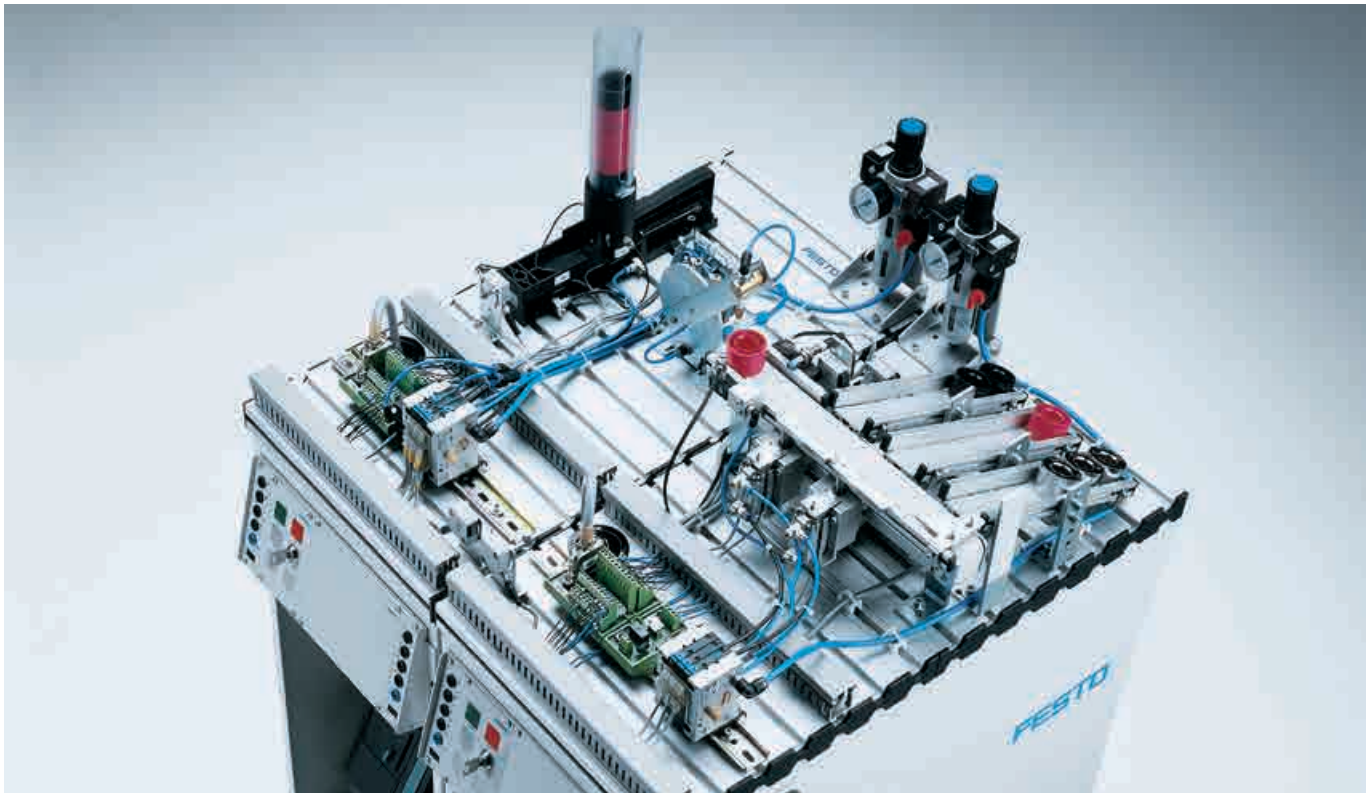

Simple communication
A station can only pass on a workpiece to the next station if it is ready to process it. In the MPS®, this "OK" signal is provided via optical sensors. This makes it very easy to combine stations.

Alternatively enhanced I/O communication
The stations can also be networked via I/Os. We have routed the necessary input and output signals to 4 mm safety sockets to facilitate this communication. The corresponding exercises and worksheets can be found in the Mechatronics Assistant.

Controlling, simulating and programming with EasyPort
No matter which control package you choose the scope of delivery always includes EasyPort, the universal interface for getting started with blended learning.

Then there's FluidSIM®
Simply start FluidSIM and the integrated Soft Logo! takes over control of a station or the entire system. Getting started with programming has never been so easy.

Complete MPS 202 system with Simatic S7-300 control package	**541161**
Complete MPS 202 system with Festo CPX-CEC control package	**541162**

PLC control packages include:
SIMATIC S7-300
2x EduTrainer® Universal with SIMATIC S7-313C-2DP, 1x programming cable, 1x programming software STEP 7 Professional for Training
Festo CPX-CEC
2x EduTrainer® Universal with CPX-CEC, 1x programming cable, 1x programming software CODESYS®

The MPS 202 system includes the following products:
Stations
Distributing, Sorting
Accessories
2x trolley, 2x power supply unit, 2x control console, 1x workpiece set, 1x SimuBox
Control technology
1x PLC control package, 1x EasyPort
Software
1x FluidSIM® P, 1x Mechatronics Assistant, 1x Discover MPS® 200 web-based training program, 1x LOGO! Training web-based training program

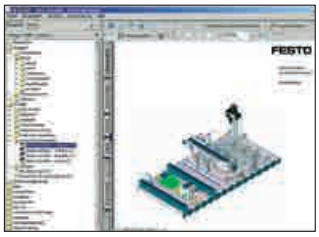

Mechatronics Assistant Professional Training – Successful training with MPS®
With more than 2,000 pages of lesson material on the two stations, the system can be used in lessons straight from the box. Also provided are exercises on modules, stations and all related topics such as circuit diagram creation, PLC programming and a full set of documentation for the trainer.

All the exercises can be modified, extended and archived, making the Mechatronics Assistant the tool for professional training methods.

Getting started with MPS® 202 – a multi-media experience
The Discover MPS® 200 web-based training program takes your trainees on a voyage of discovery – in their own home, in the laboratory or in any other location that suits them.

Function
The Stacking magazine module separates workpieces. The Changer module transports the individual workpieces to the sorting conveyor by means of its vacuum gripper. Optical and inductive sensors differentiate the workpieces based on material and color. Pneumatic branching gates then sort the workpieces onto three different slides.

Training aims
– Mechanical set-up of a station
– Installation of tubing for pneumatic components
– Vacuum technology
– Pneumatic linear and rotary drives
– Application of simulation tools
– Correct wiring of electrical components
– Correct application of limit switches
– Mode of operation and applications of optical and inductive sensors
– Logic programming
– Programming and application of a PLC
– Structure of a PLC program
– Programming of alternative branches
– Programming of an operating mode part
– Set-up and optimization of material flow
– Optimization of setting-up times
– Linking of stations
– Simple communication
– Material flow control
– Enhanced I/O communication
– Commissioning of complex systems

ProLog Factory

Logistics – Communication – Mechatronics – Robotics

The new training platform for logistics, communication technology, mechatronics, robotics and industrial engineering

The processes and material flow in the ProLog learning factory are a representation of a real production system with logistics and shipping.

It includes intermediate buffers and magazines for the raw materials and an automatic store for the individual products. The production line produces the parts with low stock levels according to the KANBAN principle.

Production line
The production line produces the products. Individual stations provide the raw materials. The system tests, processes and assembles the unfinished parts into products. The high bay warehouse stores the finished parts until they are reused.

Picking station
The orders are compiled in the Picking station. An industrial articulated robot arm places the orders onto pallets.

Logistics field
The logistics field provides the buffer function on pallets until delivery of the orders.

HMI and communication technology

A wide range of different networking and communication principles are used in the ProLog Factory.

The SCADA application includes:
– Visualization of the status of the entire system and the individual stations
– Communication with the stations via Ethernet/PROFIBUS DP
– Alarm messaging
– Alarm logging
– System control
– Data acquisition
– Order entry
– Database application
– Order management

PROFIBUS DP and WLAN communication are also clearly integrated into the learning factory.

Blended learning package included

Each MPS® 200 system includes a package of web-based training programs as well as FluidSIM® Pneumatic and Mechatronics Assistant, the tool for professional training. Some have CIROS® Programming and CIROS® Education.

Mobile autonomous robots
Mobile robots play an increasingly important role in automated production. Within the ProLog learning factory, realistic experiments and practical, relevant training on these new trends are possible.

The mobile robots are equipped with a telescopic fork and operate like forklift trucks to reach all positions in the warehouse.

Robotics
The complete cell contains an application with handling and palletizing tasks. The robot is equipped with a pneumatic gripper. Different automated modules are arranged in the cell to create a typical robot training environment.

The cell can be equipped with a choice of different 6-axis robots.

Mechatronics
The MPS® stations in the ProLog learning factory include:
– Everything for PLC training
– A wide selection of different handling components
– Vacuum technology
– Sensor technology
– Drive technology

Motivated research and learning
Using the ProLog Factory provides practical training on necessary soft skills as well as the technical expertise:
– Teamwork
– Cooperation
– Learning skills
– Independence
– Organizational ability

The Robotino® View, Robotino® SIM and CIROS® programming and simulation tools increase learning success and efficiency in the learning factory.

Technologies and processes

Top issues in the ProLog Factory

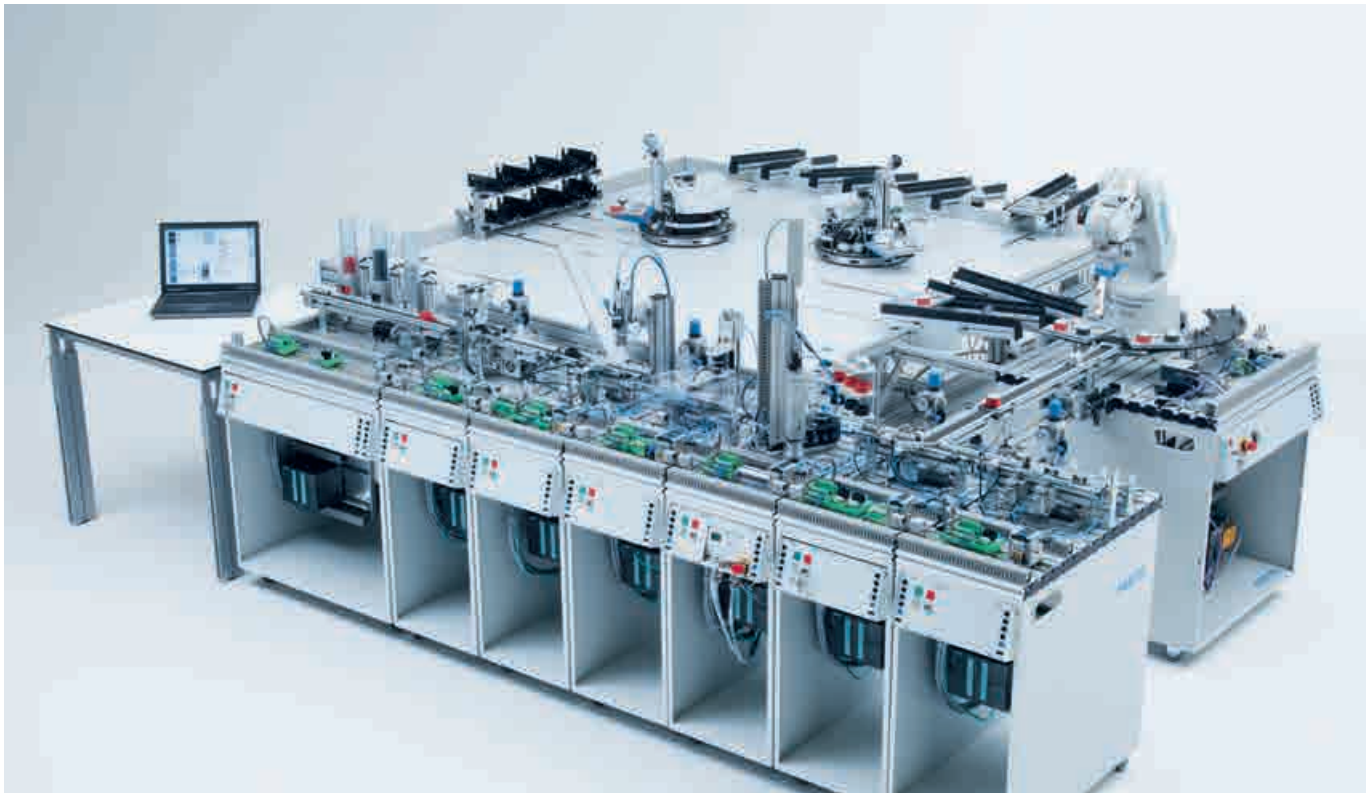

Drive technology and closed-loop control
The ProLog Factory features a variety of modern drive technology. High-end drives from Festo, such as the servo motor MTR-DCI, the mini slide with integrated encoder, a range of pneumatic linear axes and DC motors for the belts, provide a wealth of training material.

The Robotino® is perfect for providing training in closed-loop control. As a driverless transport system in the ProLog Factory, it is driven by a combination of three controlled industrial motors with shaft encoder.

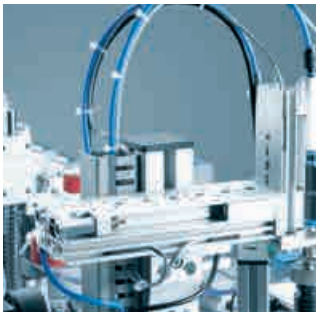

Handling and vacuum technology
At numerous points in the system, workpieces have to be gripped, transported and positioned, often using vacuum technology. As in any modern system with handling technology, the ProLog Factory contains suction grippers, vacuum generators and sensors, valve terminals and proportional pressure regulators on the one hand, and pneumatic muscles, linear slides and rotary drives on the other.

Sensor technology and navigation
In the ProLog Factory, numerous sensors ensure safety, precision and quality in automation technology. Optical, inductive and capacitive sensors, color, laser and pressure sensors make the system into a complex learning system for potential sensor specialists.

The Robotino® is an autonomous industrial truck and always needs to know where it is. With its distance sensors, the color camera and the gyroscope sensor, it enables the topic of navigation to be included in the training.

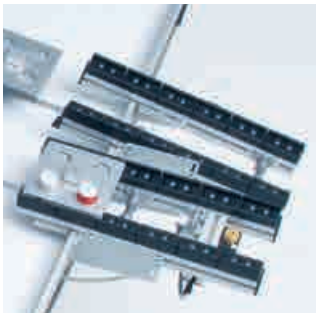

RFID technology
Totally unknown a few years ago, but now an issue for more than just automation technology, the RFID chip is the modern rating plate for consumer goods and packaging and has become established as part of our daily lives.

The ProLog Factory uses RFID technology to save order data and production statuses on the pallet, thus providing an up-to-the-minute topic for training in automation technology.

ProLog Factory	On request

Package range
Consisting of:
Production line
MPS® stations Distributing 3-way magazine*, Testing*, Pick&Place*, Fluidic Muscle Press*, Storage*, Separation* and Sorting*
Picking station
With industrial robot
Logistics area
With high bay warehouse and 2 mobile robots
SCADA computer
With visualization application
Software and media
Programming package STEP 7 Trainer Package, CIROS®, Mechatronics Assistant, WinCC, Robotino® View, Robotino® SIM

* Includes mobile frame, MPS® control panel and EduTrainer® Universal S7-300.

System management
The ProLog Factory is supplied complete with visualization. The master computer can be used to monitor all signals, functions and processes. Customer-specific orders are also entered here – a great feature for interdisciplinary cooperation, e.g. with trainees in commercial disciplines.

Energy monitoring with DC Wattmeter
Anyone who wants to discover potential savings can begin by measuring the current consumption. The data recorded by the DC Wattmeter goes to the master computer via a switchable interface (0 – 10 V DC or 4 – 20 mA) or via Ethernet. The display on the device shows the current and cumulative power consumption.

The production process
The material and information flow in the ProLog Factory reflects the processes in modern production, including logistics and shipping. Raw material is stored in buffers and magazines, while end products are transported to an automated goods-out warehouse.

Production is based on the KANBAN principle. Free stock locations are restocked with unfinished parts immediately. Color and laser sensors ensure that parts with quality defects are sorted out.

The workpieces are assembled by the fluidic muscle press and Pick&-Place MPS® stations. In the Storage station, the finished parts wait to be fed to the Picking robot “just in sequence” and palletized for specific orders.

After picking, the Robotino® takes on the pallets. It takes them to the goods-out area or to interim storage. If it has time, it takes empty pallets back to the Picking station.

Training content
The variety of stations and the technologies they contain can be used to cover almost all of the relevant topics in control and automation technology.

– Use of RFID technology
– Vision system and camera inspection
– Use of PLCs and programming
– Use of different handling equipment and grippers
– Use of different electric drives
– Vacuum technology
– Pneumatic linear and rotary drives
– Use of fluidic muscles
– Use of laser and color sensors
– Use of pressure sensors
– Use of industrial robots
– Networking of automated systems with Ethernet TCP-IP
– Visualization of systems with WinCC
– Use of simulation tools
– WLAN communication
– RFID technology
– Networking with PROFIBUS DP
– Working with autonomous mobile robots
– Programming a mobile robot with GRAFCET
– Creation of functional modules in C++
– Control of drives
– Navigation

Robotics

Some training solutions included in this product guide do not yet fully comply with EU directives regarding safety, health, and environmental protection (CE marking). A special note was added to the description of such products. If you are interested in one of them, but require such compliance, please contact your Festo sales representative.

Robotics for training and research

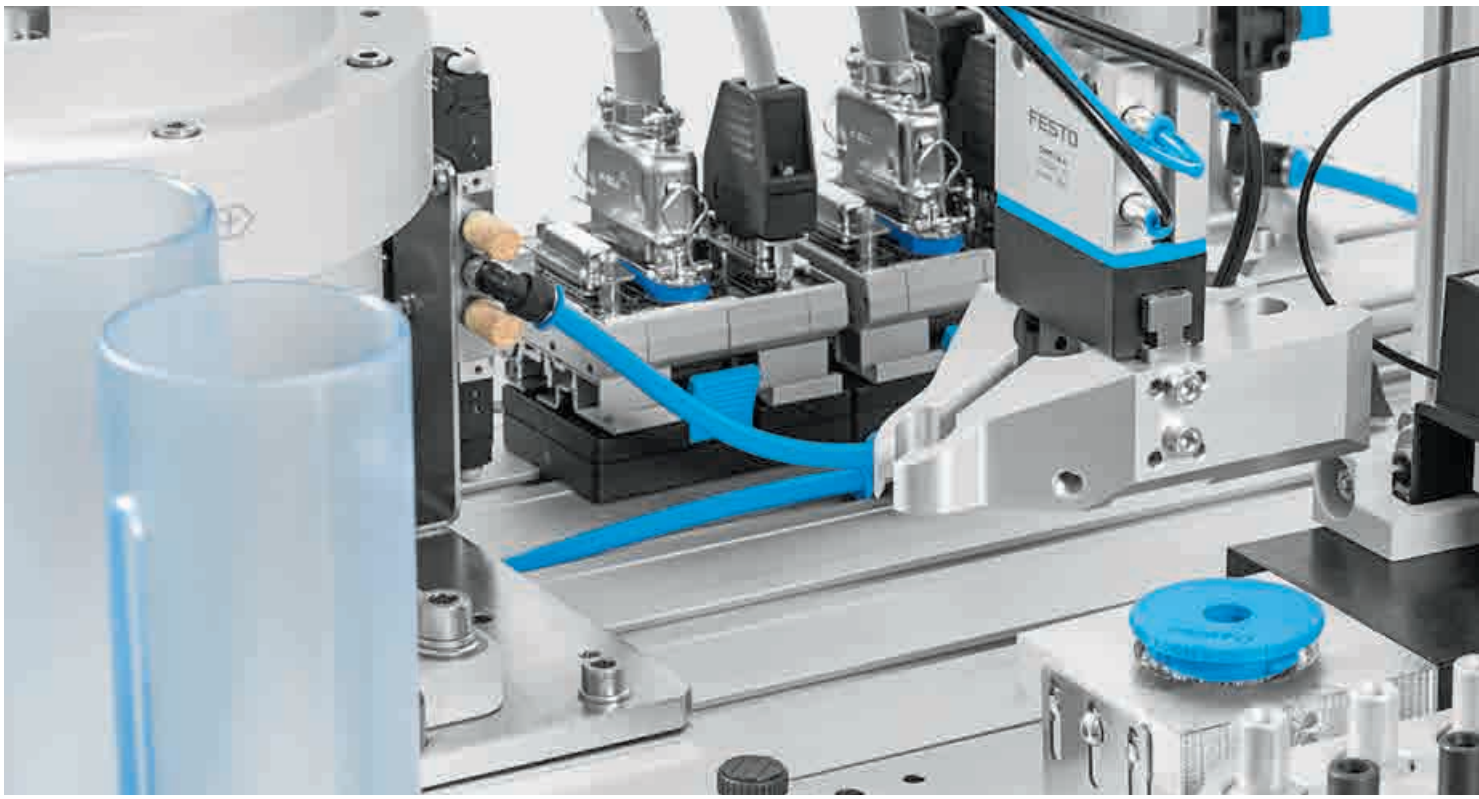

An important role for Industry 4.0

Industry 4.0 changes the world of production by merging modern information and communication technologies with classic industrial processes, making them more flexible and efficient.

Robotics is an important topic for this new industrial model. Technology developments in this field open the door to new applications and configurations, as well as human-robot interactions.

This is why robots are an integral part of the Industry 4.0 learning solutions offered by Festo Didactic.

Robotics learning solutions
Industry needs knowledgeable, skilled robotics engineers, technicians, and operators. To enable trainers to successfully integrate robotics into programs and lab facilities, Festo Didactic offers holistic approaches to integrate industrial stationary, mobile and service robots into your learning environment.

Hardware equipment is supported by multimedia and paper-based training tools, creating a blended learning environment.

Integration into manufacturing systems
Robots can be integrated into cyber-physical systems and the modular production system MPS® for customized set-ups and complete coverage of automation.

The robot stations and modules can also be tailored to specific requirements.

Flexibility and expandability
Mobile robots from Festo Didactic are based on an open source concept. Users have full access to the entire source code for the implementation of robot applications with common programming languages and systems.

In addition, state-of-the-art functions ensure the greatest possible system expandability and compatibility.

A key component of industrial automation

The number of robot installations is rapidly increasing all around the world, driven by greater demands for industrial productivity and efficiency. The majority of manufacturers has already integrated robotics technology, to different degrees, in their operations.

Robotics is now a key component of automation and a competitive advantage for companies. Today, robotics is paving the way for new technologies and capabilities, creating job opportunities and posing important challenges for the workforce.

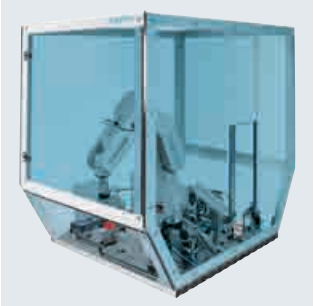

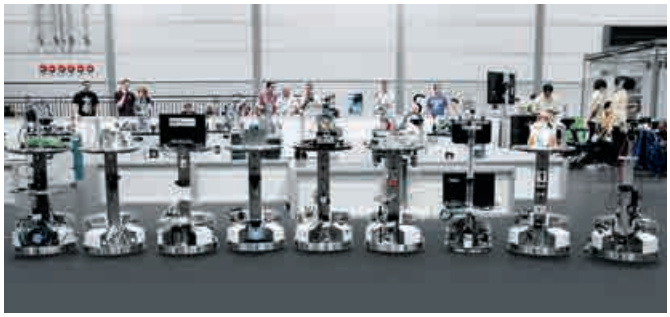

Safety first
Festo Didactic designs all educational equipment with user safety in mind, ensuring safe training with industrial components and products in compliance with all relevant regulations is feasible.

Our safety housing for industrial robots is in compliance with DIN EN 60204-1, enabling you to operate with peace of mind. The mobile robot Robotino® complies with EN ISO 12100-1 and 12100-2 for the safety of machinery.

Virtual training
CIROS® offers professional robotics training in a virtual environment. Students can simulate a wide range of applications in industrial robotics.

Ready-made simulation models provide users with a safe, hands-on environment for learning the basics or more advanced subjects.

The software can also be connected to real robot controllers for practical selected training.

Research projects
Festo is proud of its cooperation with the scientific community. Our solutions and expertise help researchers to push boundaries by developing alongside or deploying ready-made technology.

- Project APPsist aims to develop new mobile, context sensitive, and intelligent-adaptive assistance systems for knowledge and management support in smart manufacturing.
- Project InnoCyFer aims to help companies to increase customization and configuration options for their products, while raising their quality standards.
- RoboCup develops agent-based automated guided vehicles (AGV) to help leverage the benefits of Industry 4.0 compliant factories.
- As part of project Squirrel, Festo Didactic helps “Clearing clutter bit by bit” with its mobile robot platform.

Robot station with MPS® modules

The equipment level as an introduction to industrial robotics

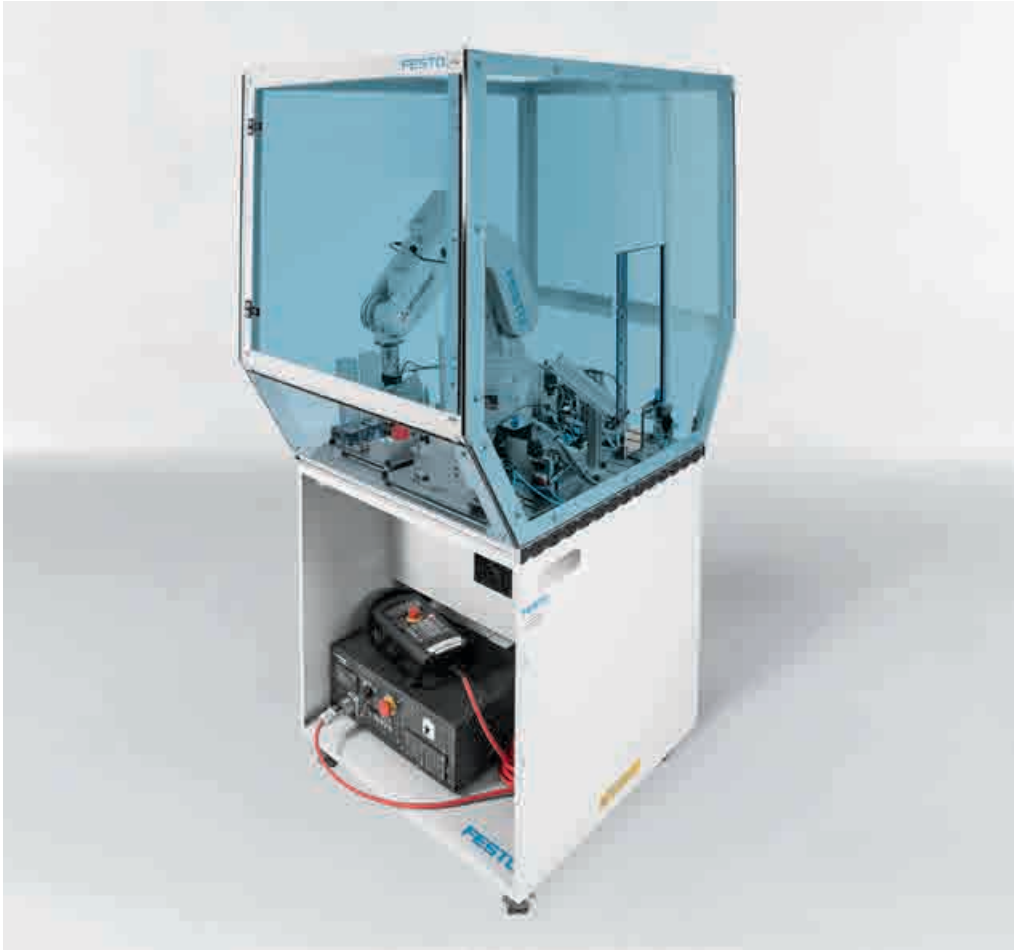

Function
This equipment level is created based on the basic design of the MPS® robot station and the two robot handling and robot assembly modules as a introduction to industrial robotics. The upstream station feeds the bodies of the pneumatic cylinders to be assembled to the robot via a slide. The robot determines the orientation of the bodies and places them in the assembly holder in the correct orientation. It takes the piston from the pallet and assembles it in the body. Controlled magazines feed the piston springs and cylinder end caps to the robot. The fully assembled pneumatic cylinder is then placed on a slide.

Topic: Handling and assembly
In many industrial applications, robots handle and assemble workpieces and modules. Getting to know these areas of application is an essential part of an introduction to robotics.

Developed in accordance with the EU Machinery Directive 2006/42/EC in compliance with DIN EN 60204-1 and DIN EN ISO 12100.

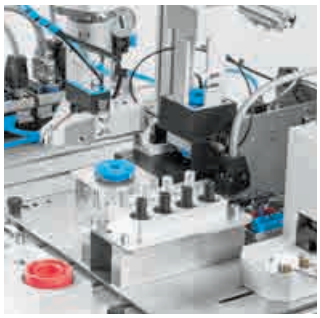

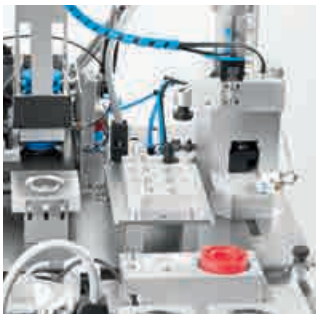

Robot station with MPS modules, complete	**8039313**

Battery set for robot RV-2SDB/RV-2FB	572162

Note:
The robot's batteries feature a buffer period of one year and must therefore be replaced every year.

Recommended accessories:

Workpiece set "For cylinder assembly"	162239
Programming instructions for Mitsubishi robot RV-2FB, en	8039315
Technical manual for Mitsubishi robot RV-2FB, en	8039316

Other accessories:

Graphical operator terminal	8039317

The most important components at a glance:

MPS trolley, 700 x 700	541139
Aluminum profile plate 700 x 700	159410
Safety housing	8039314
Control console, SysLink, 700 mm	8039325
Tabletop power supply unit ➔ Page 231	
Robot handling module ➔ Page 230	
Robot assembly module ➔ Page 230	
Robot interface box	8046131
Robot RV-2FB with Teachbox R32TB	3396765
Gripper, pneumatic	573859
Start-up valve with filter control valve	540691
CIROS, License package with 6x Education, 1x Studio ➔ Pages 46 – 47	

Technical data
- Power supply: 230 V AC
- Operating pressure: 600 kPa (6 bar)
- Maximum workpiece width: 40 mm
- 12 digital input
- 5 digital outputs

More learning and research systems for robot technology:
- Robot Vision Cell
  ➔ Pages 232 – 235
- Robotino®
  ➔ Pages 236 – 245

Recommended training media
Training documentation MPS®
Handling with industrial robots

Training content
- Integration of an industrial robot in an assembly process
- Teaching of robots in complex assembly environments
- Commissioning of complex systems
- Maintenance, servicing and troubleshooting of complex systems
- Programming of industrial robots combined with the integration of sensors and additional actuators
- Programming of multitasking applications

Campus license (➔ Page 55):

de	**8046573**
en	**8046575**

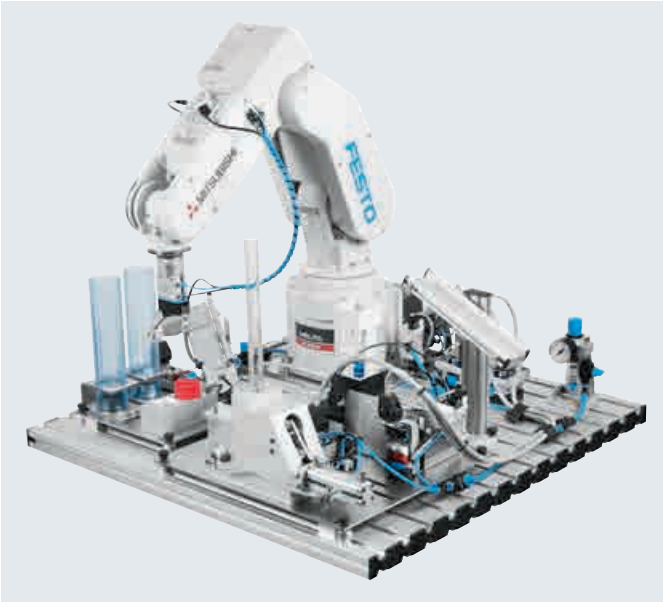

Robot station with MPS® modules in detail

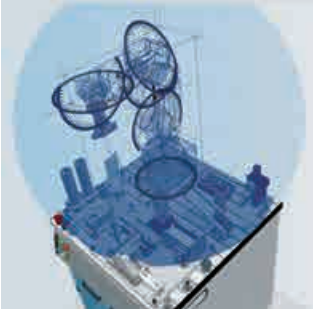

CIROS®
805 robots supplied by 15 different manufacturers for the perfect start to time-saving kinematic simulation. Thanks to the full integration into the automation technology with PLC, fieldbus and sensor simulation support, the learning environment can be optimized to suit each user's needs.

- Networking of objects, sensors, actuators, robots and corresponding virtual controllers
- Work virtually in the classroom or lab using error simulation and the Teacher mode
- MPS® robot station hardware expansion
- Apply exercises to real technology after completing a safe introduction

CIROS ➔ Pages 44 – 49

Robot station

Base for the robot applications

Function
The robot station includes the new 6-axis articulated arm robot RV-2FB by Mitsubishi Electric. This industrial robot combines a sturdy engineering design and construction with a large working range and a high movement speed.

In the basic design, the station is equipped with a robot controller, Teachbox, safety housing, service unit and pneumatic multifunction gripper. Additional MPS® modules are available for your individual robot applications.

Topic: Industrial robotics
In flexible automation, industrial robots are among the most important components. They allow automated processes to be adjusted rapidly. The MPS® robot station and its equipment levels make processes and tasks possible which are required in industrial production for commissioning and adjustment of robot-based work cells.

Fit for research:
the real-time interface
The robot's controller is able to adopt setpoint values for the axes via a network connection. This allows you to develop your own robot controller.

Kit Robot station	**8039312**

Additional equipment, also order:

MPS trolley, 700 x 350	541139
Control console, SysLink, 700 mm	8039325
Tabletop power supply unit ➔ Page 231	
Robot handling module ➔ Page 230	
Robot assembly module ➔ Page 230	
Robot interface box	8046131
Graphical operator terminal	8039317

Battery set for robot RV-2FB	572162

Note:
The robot's batteries feature a buffer period of one year and must therefore be replaced every year.

Recommended accessories:

Workpiece set "For cylinder assembly"	162239
Programming instructions for Mitsubishi robot RV-2FB, en	8039315
Technical manual for Mitsubishi robot RV-2FB, en	8039316
CIROS ➔ Pages 44 – 49	
C interface	8025738
15-pin Sub-D HD cables: connector – connector, 1.0 m	8033583
I/O data cable with SysLink connectors (IEEE 488), 2.5 m	34031

Note:
Each Application module ➔ Page 230 requires 1x C interface (order no. 8025738), 1x 15-pin Sub-D HD cable (order no. 8033583) and 1x I/O data cable with SysLink connectors (order no. 34031).

The most important components at a glance:

1x Aluminum profile plate 700 x 700	159410
1x Robot RV-2FB with Teachbox R32TB	3396765
1x Gripper, pneumatic	573859
1x Safety housing	8039314
1x Start-up valve with filter control valve	540691

Training content
- Mechanical structure of a robot station
- Mode of operation and applications of optical sensors
- Use of safety switches
- Areas of application of industrial robots
- Terminology in robot technology
- Teaching robots in different coordinate systems
- Moving robots in object coordinate system

Technical data
- Power supply: 230 V AC
- Operating pressure: 600 kPa (6 bar)
- Maximum workpiece width: 40 mm
- 1 digital input
- 2 digital outputs

More learning and research systems for robot technology:
- Robot Vision Cell ➔ Pages 232 – 235
- Robotino® ➔ Pages 236 – 245

Recommended training media
- CIROS® programming and simulation software ➔ Pages 44 – 49

- Training documentation MPS® Handling with industrial robots ➔ Page 66

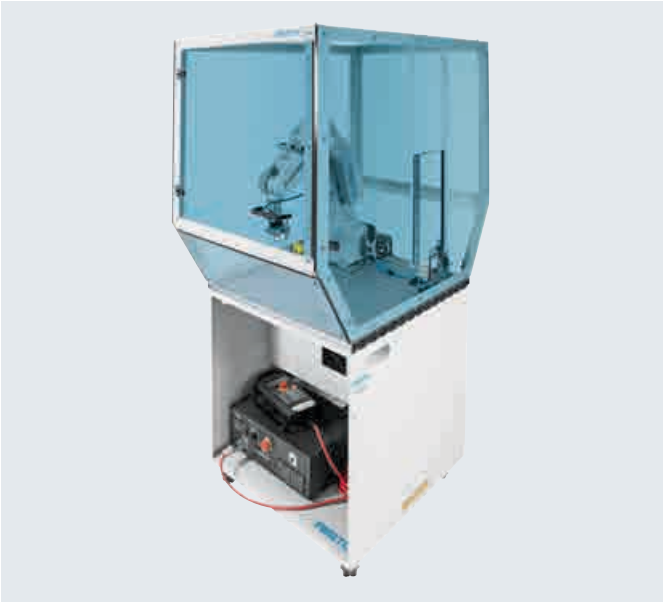

Robot station with additional equipment

Robot RV-2FB with Teachbox R32TB
High-precision, 6-axis articulated arm robot with gear units by Harmonic Drive AG and brakes on all axes. Complete with control unit, programming cable, battery set and a standard handheld terminal R32TB.

Order no.	3396765

Robot RV-2FB with R56TB touch panel
High-precision, 6-axis articulated arm robot with gear units by Harmonic Drive AG and brakes on all axes. Complete with control unit, programming cable, battery set and handheld terminal R56TB, which conveniently provides all programming functions via a 6.5" graphical touchscreen.

Order no.	3481428

Robot handling module

The robot handling module extends the MPS® station by adding the workpiece handling application. This module supplies workpieces to the station via a slide, which the robot transports to the assembly retainer. The sensor in the gripper enables the robot to differentiate workpieces by color (black/non-black). The sensor in the assembly retainer also monitors the orientation of the workpiece. From the assembly retainer, the robot sorts the workpieces into various magazines or passes them on to a downstream station. The combination with the robot assembly module also allows workpieces to be assembled.

The two pipe magazines and the assembly retainer are mounted on a mounting plate which can be mounted on the base plate of the MPS® robot station with the supplied mounting material. That allows the overall module to be removed from the station and remounted later in the identical position if required, without adjusting the relevant robot positions for this module.

Scope of delivery
- Slide module
- Retainer module with reflection light sensor
- Assembly retainer module with reflection light sensor
- 2 pipe magazines
- Mounting plate
- Mounting material for profile plate

Technical data
- Power supply: 24 V DC
- Maximum workpiece width: 40 mm
- 2 digital inputs
- Overall height/width/length: 245/220/245 mm
- Weight: 5 kg

Training content
- Workpiece handling with industrial robots
- Robot programming using I/O communication

Order no.	**8038620**

Recommended accessories:

Workpiece set “Cylinder bodies”	167021
Workpiece set “For cylinder assembly”	162239
C interface	8025738
15-pin Sub-D HD cables: connector – connector, 1.0 m	8033583
I/O data cable with SysLink connectors (IEEE 488), 2.5 m	34031

Robot assembly module

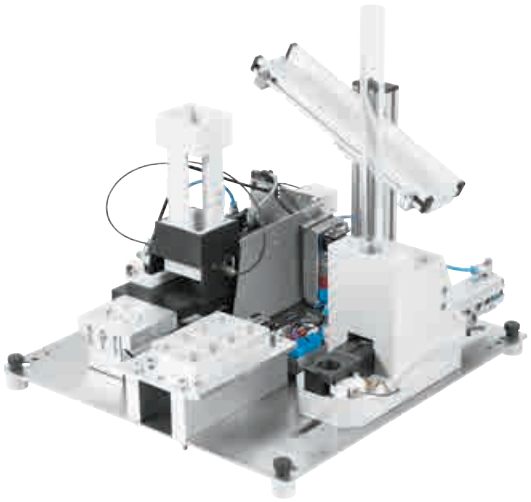

The robot assembly module is used to mount assemblies in the MPS® robot station. The module supplies the individual components for the assembly process of the pneumatic cylinder: A double-acting cylinder pushes the cylinder end cap out of the stacking magazine. The pistons are stored on a pallet. A double-acting cylinder pushes the springs out of a slim magazine.

All components of the robot assembly module are fastened to a mounting plate which can be mounted repeatedly with positional accuracy on the station’s profile plate. This guarantees a rapid conversion of the station.

The robot handling module with the assembly retainer are required to assemble the pneumatic cylinder. In order to control the modules with the robot control system, the robot interface unit (Order no. 534364) is required.

Scope of delivery
- Stacking magazine module (end caps)
- Piston pallet
- Separating module (springs)
- Output slide module
- Mounting plate
- Mounting material for profile plate

Technical data
- Operating pressure max: 600 kPa (6 bar)
- Power supply: 24 V DC
- 8 digital inputs
- 3 digital outputs
- Overall height/width/length: 370/325/370 mm
- Weight: 8 kg

Training content
- Introduction to and application of automated assembly systems
- Planning an assembly station
- Correct usage of limit switches
- Robot programming using I/O communication
- Commissioning of the entire process

Order no.	**8038740**

Recommended accessories:

Workpiece set “For cylinder assembly”	162239
Simulation box, digital	170643
C interface	8025738
15-pin Sub-D HD cables: connector – connector, 1.0 m	8033583
I/O data cable with SysLink connectors (IEEE 488), 2.5 m	34031

Accessories

Tabletop power supply unit
– Input voltage:
  85 – 265 V AC (47 – 63 Hz)
– Output voltage:
  24 V DC, short-circuit-proof
– Output current: max. 4.5 A
– Dimensions: 75 x 155 x 235 mm
Without power cable

Order no.	**162416**

With IEC power cable, 1.3 m, with:
Connector as per CEE 7/VII for DE, FR, NO, SE, FI, PT, ES, AT, NL, BE, GR, TR, IT, DK, IR, ID

Order no.	**162417**

Connector as per NEMA 5-15 for US, CA, Central America, BR, CO, EC, KR, TW, TH, PH, JP

Order no.	**162418**

Connector as per BS 1363 for GB, IE, MY, SG, UA, HK, AE

Order no.	**162419**

Connector as per AS 3112 for AU, NZ, CN, AR

Order no.	**162380**

Connector as per SEV 1011 for CH

Order no.	**162381**

Connector as per SANS 164-1 for ZA, IN, PT, SG, HK, (GB), (AE)

Order no.	**162382**

Robot interface box
Add-on for robot station

The Robot interface box allows the robot controller to undertake additional PLC functions.

Up to 16 robot controller I/Os can be distributed to 4 SysLink sockets with the Robot interface box. The Robot interface box is connected to the robot controller's I/O card via a 50-pin Centronics connector. On the front panel are LEDs to display the status of the robot I/Os. On the rear panel are 4 SysLink sockets for connection to peripherals.

Order no.	**8046131**

Workpiece set
"Reject bodies"
The workpiece set comprises 2 black and 2 red plastic cylinder bodies and 2 Aluminum cylinder bodies.
– External diameter: 40 mm
– Height: Each color: 1x 23 mm and 1x 24 mm

Order no.	**534368**

Robot Vision Cell

Robotics trends in focus

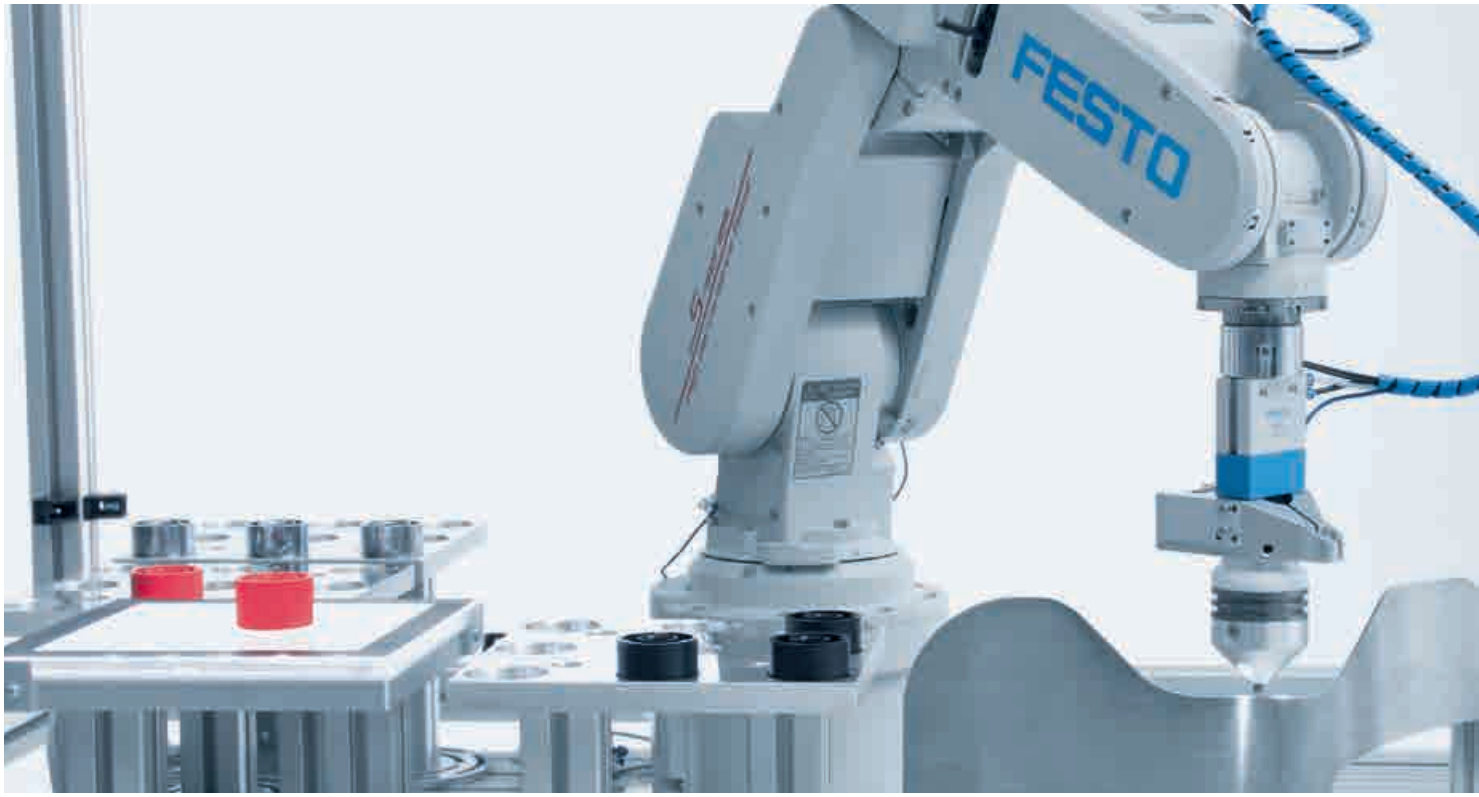

Robot with eye contact

Walking through the leading handling technology fairs or taking a look at market leaders' catalogs clearly shows that without a camera, a modern robot cell is worthless when it comes to future production. The camera is the basic prerequisite for one of the elementary forms of work in the future: collaboration between humans and robots.

In this context, the Robot Vision Cell is an extremely innovative learning environment in contemporary robotics training. It enables the potential of current robot applications and the trends in future applications to be outlined in a clear and practical way.

Priority 1: Safety
Robots operate quickly, powerfully and dynamically. Safety cages are therefore used to protect operating and maintenance personnel.

Safety must be the top priority and is an essential part of any training content. Thus, it is only logical that we have completely enclosed the Robot Vision Cell and fitted it with safety doors.

Welding simulation
Welding is a typical example of a robot application that demands precision path control. In the Robot Vision Cell, appropriate tools and suitably shaped parts enable path welding tasks to be simulated.

Palletizing and assembly
Fast and precise assembly of part-finished or end products and removal or loading of pallets are standard tasks for most robotics applications. The workpieces from the modular production system and the appropriate pallets are therefore included.

Configuration, programming and simulation

No learning system is complete without the necessary supporting software.

Therefore, the cell includes configuration and image processing software that can be used to set up and perform even complicated measuring and testing tasks.

The CIROS® cells simulated in 3D make a major contribution to efficient and varied training. Simulation also provides a high level of safety at the start of robotics training.

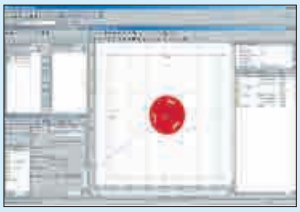

Industrial design camera
The industrial camera communicates directly with the robot controller via Ethernet and can thus easily be integrated into the process as an additional unit – for position detection, color identification, for checking dimensions or, for example, for monitoring assembly processes.

Calibration and transmitted light unit
The calibration and transmitted light unit supports the camera in its quality assurance tasks. For example, it increases the accuracy of the tool positions and helps to detect the position of workpieces.

Robot Vision Cell

Robotics and vision

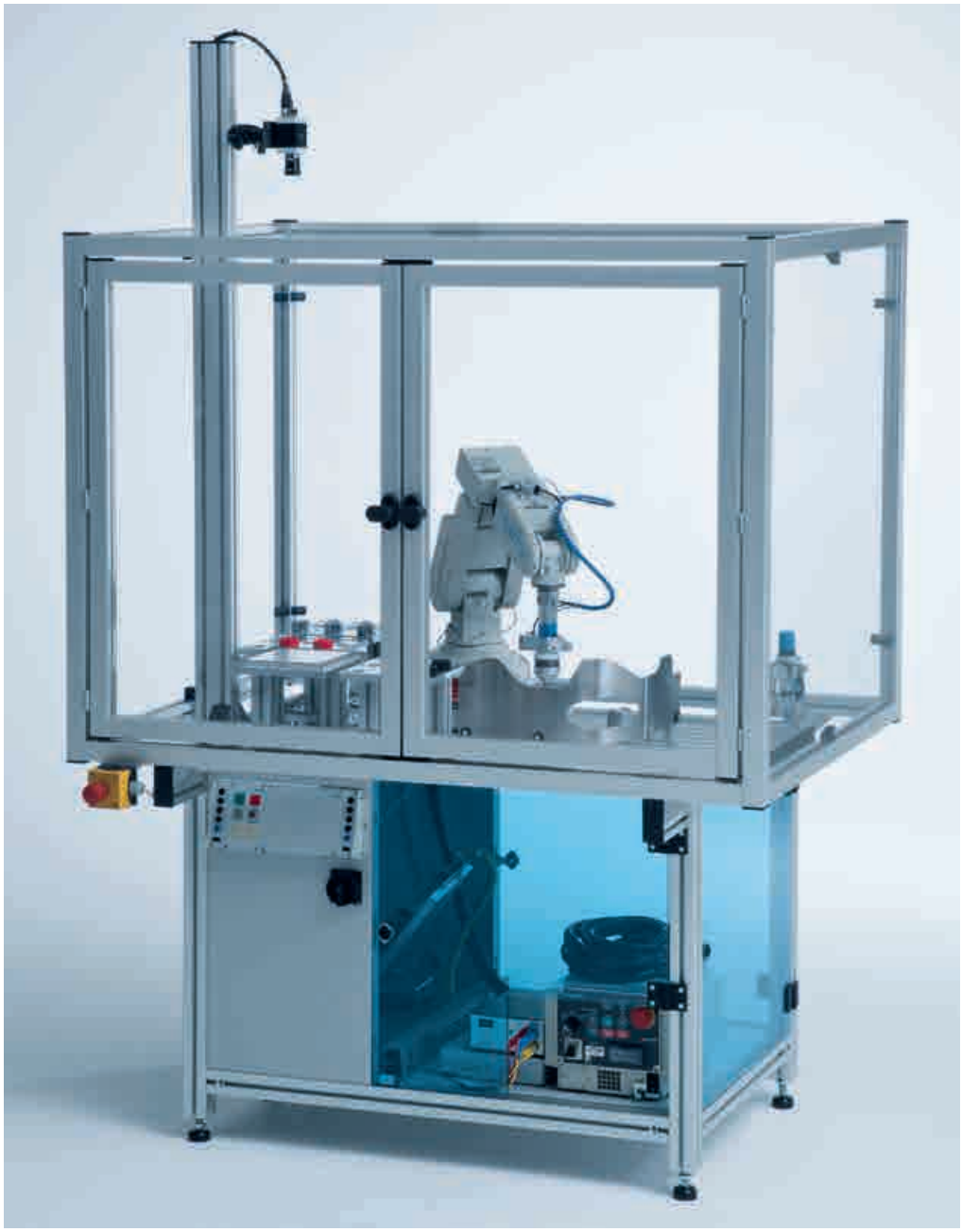

Function
The Robot Vision Cell provides the optimum learning environment for robotics and vision. The clearly arranged pallets and storage areas allow easy and efficient work with the cell. Different exercises such as palletizing, assembly or welding (simulated) can be carried out using the cell.

Construction
The robot cell is completely mounted on an Aluminum profile plate. The robot controller is neatly housed in the frame. The station is equipped with a main switch and additional control panel. The safety concept for the cell includes doors with a safety switch and an emergency stop mushroom actuator.

Robot options
The cell can be fitted with different robot systems, such as the Mitsubishi RV-2FB or the KUKA KR5sixx.

Robot Vision Cell RV-2FB	On request

(with base frame, safety housing, camera system and Mitsubishi robot system RV-2FB)

Robot Vision Cell KR5sixx	On request

(with base frame, safety housing, camera system and KUKA robot system KR5sixx)

Learning content for project work

Mechanics:
– Mechanical construction of a station

Sensor technology:
– Mode of operation and applications of optical sensors

Vision:
– Mode of operation and applications of industrial camera systems
– Object detection
– Position and orientation
– Communication with master controllers

Safety engineering:
– Mode of operation and applications of safety switches
– Construction of safety circuits

Robotics:
– Applications of industrial robots
– Terminology in robot technology
– Teaching robots in different co-ordinate systems
– Moving robots in object co-ordinate system

Recommended learning media

CIROS® ➔ Pages 44 – 49

WBT Machine Vision ➔ Page 20

WBT Safety engineering ➔ Page 21

Robotino®

New potential at all levels

Mobile robot platform for research and training

With its omnidirectional drive, sensors, interfaces and application-specific extensions, Robotino® is equipped for universal use.

The most important programming languages and systems are available for programming individual applications.

Like industrial robots, mobile and service robots are also becoming more and more important. In keeping with this technical and economic trend, the new Robotino® forms the basis for research and training in these applications.

Extremely powerful: The new computer performance
With scalable computer performance for autonomous control, image processing and the evaluation of data from laser scanners.

More interfaces than ever before
More convenient, faster, more diverse: new, state-of-the-art functions ensure greatest possible system expandability.

Open source concept
Full access to the entire source code for the implementation of robot applications with common programming languages and systems.

Fit for research – with the Robotino® for Industry 4.0

With its new, flexible operating height, Robotino® has been fully integrated into the world of MPS® systems and research factories as an autonomous transport system.

Once programmed, Robotino® automatically identifies, for example, the correct MPS® station – the first step towards a fully automated production system!

Gefördert durch:
Bundesministerium für Wirtschaft und Technologie
aufgrund eines Beschlusses des Deutschen Bundestages

Sturdy and movable
With three independently driven omniwheels, Robotino® can move in all directions. The stainless steel structures of the frame ensure high stability in every travel situation.

Payload greater than unladen weight
Thanks to its sturdy design, Robotino® can move a payload of up to 30 kg while weighing 20 kg itself.

Flexible and adaptable design
Numerous mounting choices and the optional mounting tower with individually positionable platforms ensure that Robotino® can be used for a wide variety of tasks.

Plug and play
Robotino® supports various grippers, manipulators and sensors through plug and play. Robotino® recognizes these components once they are connected, and the control can begin.

Robotino®

For research and education: Premium Edition and Basic Edition

[X]

Select your version!
Robotino® is available in two standard versions, **Premium Edition** and **Basic Edition**. These two versions differ in computing power, the size of the internal memory and the mechanical extension, the mounting tower.

Omnidirectional drive
The three drive modules of the Robotino® are integrated in a stable, laser-welded stainless steel frame. With its omnidirectional drive, Robotino® moves quick as a flash forwards, backwards and sideways and also turns on the spot. Three sturdy industrial DC motors with optical rotary encoders permit speeds of up to 10 km/h.

Everything in view
The frame contains nine infrared distance sensors. An analog inductive sensor and two optical sensors are additionally available, enabling the Robotino® to recognize and follow predefined paths. Robotino® is supplied with a color camera with full HD 1080p resolution.

Uninterrupted use
Power is supplied via two 12 V non-spillable, lead-gel rechargeable batteries which permit a running time of up to four hours. The system is automatically switched off in time if the state of charge is too low. A power supply unit and a jack are included in the scope of delivery, which means that Robotino® can also be used for experiments or further development of control programs while it's charging.

[X] Illustration includes additional equipment and accessories

Premium Edition	**8029256**
Basic Edition	**8029346**

Included in scope of delivery:

Mobile robot system
- Diameter: 450 mm, height incl. controller housing: 290 mm
- Total weight: approx. 20 kg (without mounting tower), payload: max. 30 kg
- Circular, stainless steel frame with omnidirectional drive
- Rubber protection strip with built-in collision-protection sensor
- 9x infrared distance sensors, 1x inductive sensor, 2x optical sensors
- Color camera with full HD 1080p resolution and USB interface
- **Premium Edition**: mounting tower with three mounting platforms

Control and interfaces
- Embedded PC to COM Express specification
- **Premium Edition**: Intel i5, 2.4 GHz, dual core, 8 GB RAM, 64 GB SSD
- **Basic Edition**: Intel Atom, 1.8 GHz, dual core, 4 GB RAM, 32 GB SSD
- WLAN to specification 802.11g/802.11b as client or access point
- Motor control with 32-bit microcontroller and free motor connection
- 2x Ethernet, 6x USB 2.0 (HighSpeed), 2x PCI Express slots, 1x VGA
- 1x I/O interface for integrating additional electrical components

Software
- Graphical programming environment for external PC that runs on Windows XP, Vista, Windows 7/8/10
- API for programming with C/C++, JAVA, .Net, LabVIEW, MATLAB/Simulink, ROS SmartSoft and Microsoft Robotics Developer Studio

Robotino® Basic Edition
The variant for use in technical basic and further training with less computing power, less memory and without a mounting tower.

Also order:

Robotino® Workbook
Campus license (➔ Page 55):

de	**8029494**
en	**8029495**
es	**8029496**
fr	**8029497**

Recommended training media
- Robotino® SIM Professional
- Robotino® SIM
  ➔ Page 243

Control
At the heart of Robotino® is an embedded PC to the COM Express specification. This is how the scalability of the computing power is achieved. In the two standard versions of Robotino®, an Intel Core i5 processor with 2.4 GHz or an Intel Atom processor with 1.8 GHz is used. The embedded PC can be exchanged at any time. The operating system and all user data are stored on a solid state disk (SSD) with 64 GB or 32 GB.

A 32-bit microcontroller that directly generates the PWM signals for actuating up to four electric DC motors is responsible for the motor control. An FPGA is used to read in the encoder values of the motors. This enables, for example, the odometer data and any additional sensor-specific correction data to be calculated directly in the microcontroller.

Expandability
Additional components can be connected to the robot controller via standard interfaces such as USB and Ethernet. For subsequent expansion, the controller also provides analog and digital inputs/outputs and relay outputs for additional actuator technology. In order to support interfaces such as EIA-485 and IEEE 1394 that are not available in the standard versions, there are two PCI Express slots for interface cards. Additional electric axes and grippers, for example, can be connected to an additional motor output and encoder input. The Premium Edition already contains the optional mounting tower for Robotino®. The mounting column of the tower offers various options for fastening mounting platforms for manipulators or sensors at different heights.

Graphical programming
Robotino® View is the interactive, graphical programming and learning environment for Robotino®. It communicates directly with the robot system via wireless LAN. The programming system combines state-of-the-art operating concepts, expandability by the user and intuitive operation. After the program has been developed, it can be loaded into the controller of Robotino® in order to enable completely autonomous operation.

First steps with simulation
As an add-on, you can use an attractive 3D simulation package (Robotino® SIM), which simulates the Robotino®'s travel behavior and sensors in an appropriate working environment. This allows you to test your programs in the simulation first.

Open programming environment
The programming interface (API) of Robotino® allows various programming languages and systems to be used to develop a control program. The API supports the following languages and systems:
- C/C++, JAVA, .Net
- LabVIEW and MATLAB/Simulink
- Robot Operating System (ROS SmartSoft)
- Microsoft Robotics Developer Studio

Hardware-in-the-loop scenario
If you create your own motor controller, e.g. in MATLAB, the motors of Robotino® can be controlled with this software controller via the Ethernet interface.

Microcontroller programming
The 32-bit microcontroller is externally accessible and can be used directly for programming custom applications.

Laser scanner

The laser scanner for Robotino® allows the creation of maps, localization and navigation, as well as obstacle recognition, thanks to the digital detection of objects on one plane. In order to prevent collisions, the 2D laser scanner Hokuyo URG-04LX-UG01 can be mounted above the controller, for an all-around view, or in the loading bay of the Robotino®. The scanner is connected to the control unit and supplied with power via a USB connection.

The laser scanner is fully integrated into the Robotino® software architecture. The laser scanner's measured values can be accessed by both Robotino® View and self-developed control programs.

Overview of key technical details:
- Measuring range 20 – 5600 mm
- Angle range 240°
- Resolution 1 mm
- Precision ±30 mm or ±3% at 1000 mm or greater distance from an object
- Scanning frequency 10 Hz
- Power consumption 2.4 W
- Weight 160 g
- USB connection

Robotino from 2014	**8029454**
Robotino until 2013	**576310**

Logistics Kit

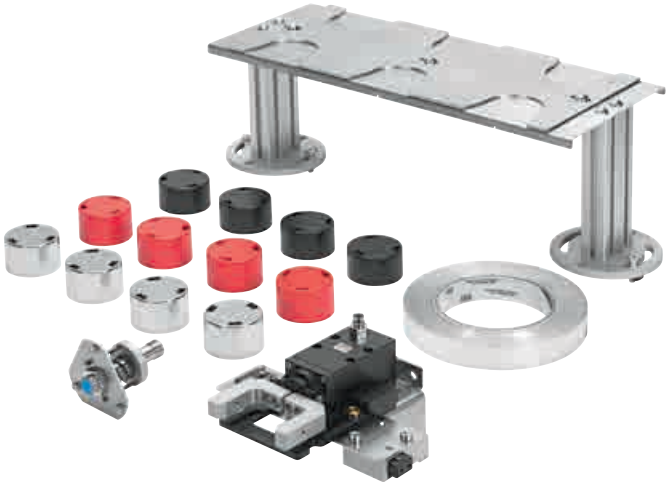

The Logistics Kit consists of an electric gripper, flat storage area with 2 rows, an inductive sensor and a set of workpieces.

The **electric gripper** is completely integrated in the Robotino® platform, so that while it is moving, monitoring is not necessary for potential collisions with the gripper. The gripper detects workpieces between the gripper jaws by means of an integrated through-beam sensor. To pick up a workpiece from a bearing surface, a slide is integrated, which signalizes the optimal position for the gripping process to the Robotino®. The gripper end positions are checked via the motor current evaluation.

The gripper function is available as a functional module in Robotino® View (starting from Version 1.7).

Scope of delivery
- **Electric gripper**
  Gripper stroke: 4 mm
  Maximum workpiece diameter: 40 mm
  Maximum workpiece weight: 300 g
  Gripping force: 140 N
  Closing/opening time: 2 s
  Operating voltage: 24 V DC
  Maximum current: 140 mA
- **Analog inductive sensor** for mounting in the middle of the robot frame
- **Flat storage area** with 2 rows and 3 storage places per row for cylinder-shaped workpieces with a maximum diameter of 40 mm.
- **Workpiece set**
- **Aluminum adhesive tape** for marking the access routes to the storage area, which the Robotino® can align itself on for gripping the workpieces.

Robotino from 2014	**8029450**
Robotino until 2013	**564179**

The most important components at a glance:

Electric gripper, Robotino from 2014	8029451
Electric gripper, Robotino until 2013	564176
Inductive sensor, analog, Robotino from 2014	8029483
Inductive sensor, analog, Robotino until 2013	564177
Flat storage	564178
Workpiece set "Cylinder bodies"	167021
Aluminum tape	564213

Electric gripper arm

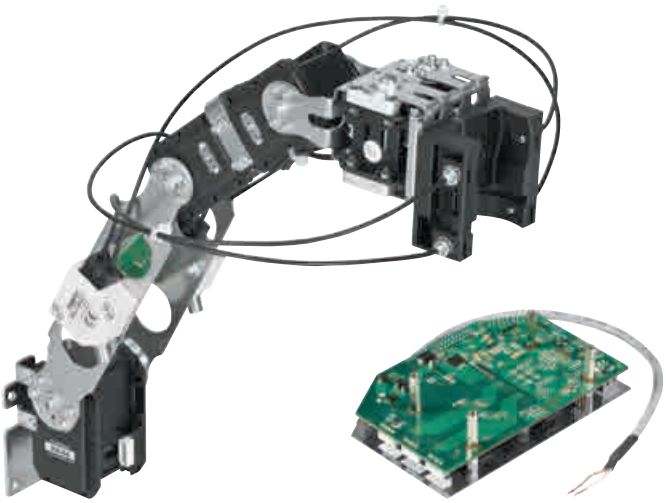

The electric gripper arm for Robotino® is a triple-axis gripper arm with servo motors that is installed in the loading bay of the Robotino®. The control board supplied is connected to the power supply (24 V) of the I/O interface and the arm movement controller via the USB interface. The handling weight is limited to 200 g and the gripper stroke is 30 to 60 mm. The unit can grip workpieces in two places. The gripper jaws are fitted with opto-electrical sensors to detect when a workpiece is present.

The gripper jaws supplied allow handling of MPS® workpieces. Robotino® View supports manipulator programming with a list of positions and function blocks for reading and writing axial values. In addition, Robotino® SIM Professional contains a simulation model of the electric gripper arm for Robotino®. The manipulator can also be controlled via the OpenRobotina API.

Overview of key technical details:
- Load bearing capacity up to 200 g
- Gripper stroke 30 – 60 mm
- Two gripping positions
- Opto-electrical sensors for detecting presence at the gripping positions
- Controlled servo motors
- 24 V DC power supply
- USB connection

Robotino from 2014	**8029452**

Forklift

With the easy-to-use forklift, the Robotino® operates, for example, as a driverless transport system in a production environment.

Assembly is done in the loading bay of the Robotino® with the assembly material included in the scope of the delivery. The electrical interface of the forklift is possible using the existing additional motor control. Here, the voltage supply and the increment generator are directly connected to the motor plate.

Program the function of the forklift in the Robotino® View or via the Open-Robotino® programming interface. In Robotino® View you can set the axial speed from -100% to 100% using the “Power output” module component and read the axial position and speed of the linear axis using the “Speed sensor input” module component.

Basic principles and details of the automated logistics can be determined with this extension to the range of applications.

Technical data
- Load bearing capacity up to 4 kg
- Maximum stroke 160 mm
- 2 proximity sensors for end-position monitoring
- 1 diffuse sensor for pallet control
- 2 self-centering pallets (included in scope of delivery)
- Connection via motor controls and encoder input
- Compatible with control board EA09

Robotino from 2014	**8029453**
Robotino until 2013	**576300**

Robotino® charging station

New

The Robotino® (from 2014 onwards) charging station ensures automatic charging without a permanent cable connection. The enclosed contact can be attached with just a few turns of the hand to the rear of the mobile robot and replaces the existing charger connection. Robotino® detects automatically that it has been successfully docked onto a charging station – which is also confirmed by visual feedback from the charging station.

The charging station is intended for stand-alone use and can be fastened onto carpet using the enclosed Velcro® fastener or without this onto tiles for instance. The charger obtains its voltage from the power supply unit of the Robotino®, a 2-pin on 6-pin adapter is also enclosed.

As of 2014, several chargers and contacts for Robotino® may be combined as required.

Robotino charging station (from 2014 onwards)	**8049096**

The most important components at a glance:

1x Robotino charging contact (from 2014 onwards)	8049044

Robotino® SIM Professional

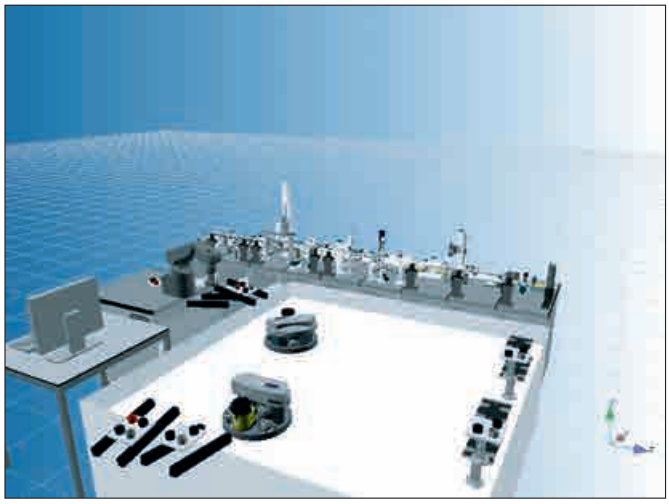

Robotino® SIM Professional is an ideal virtual learning environment for working with Robotino®. Identifying differences based on actual behavior is the key to grasping, analyzing and understanding new physical and technical phenomena. The software enables you to create any virtual 3D working environments for Robotino® and then to simulate the program created. The software is available in four languages (de/en/es/fr) and the language selection can be changed online.

The Robotino® simulation model comprises the geometric model with
– three omnidirectional drives
– two inductive analog sensors
– two digital optical sensors
– nine distances sensors
– a camera
– sensor in the chassis protection strip

The Robotino® library includes additional components such as grippers, slides, laser scanners and workpieces. You are notified of new components in the library via the Internet.

The editor and the complete model library in LabCreator provide you with an outstanding working environment for quickly and easily creating attractive virtual scenarios for Robotino®.

Robotino® can be programmed using Robotino® View or in one of the high-level languages C, C++, C# or Java. To do this, you require the corresponding API interface.

To use the software, you require a Windows 2000, XP, VISTA or Windows 7 operating system. For 3D visualisation, a graphics card with at least 128 MB RAM and OpenGL support is required.

Scope of delivery
– CD with software in de/en/es/fr
– Manual in de/en/es/fr
– 2 dongle with individual licenses
– Network dongle with 25 licenses

Order no.	**567230**

Robotino® SIM

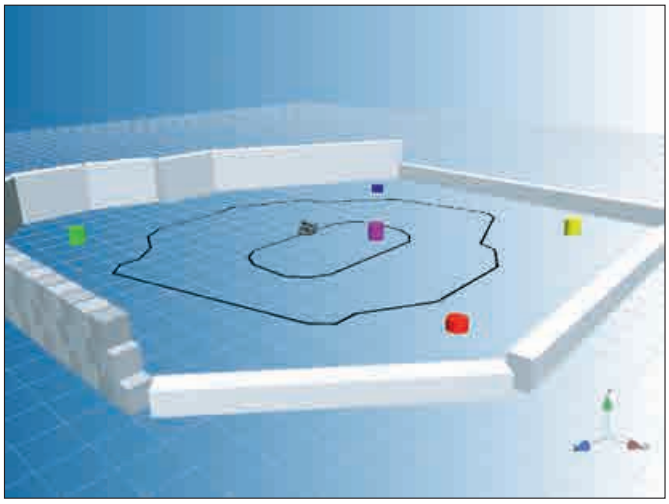

Robotino® SIM is a Windows software program for the 3D simulation of Robotino® in an exciting, predefined virtual experimentation environment.

The Robotino® simulation model cannot be extended, and includes the geometric model with the three omnidirectional drive wheels, a camera, nine distance sensors and the digital sensor in the chassis protection strip.

You can program Robotino® free of charge using Robotino® View or using one of the high-level languages such as C++ or Java.

The latest version of Robotino® SIM is now available to download free of charge.

Implementing your own applications with Robotino®

1

2

3

4

With Robotino®, you can implement your own applications in the fields of mobile robotics and service robotics. The mounting tower allows you to attach standard components or extensions developed by you to Robotino® at any height and to connect them to the control system via the provided interfaces. This means you can convert Robotino® quickly and easily from a forklift truck to a service robot, for example.

A flexible and adaptable design
- Remove covers
- Fasten mounting column (1)
- Fix mounting platform at any level
- Connect, align and mount laser scanner and camera
- Attach platform with electric gripper and connect gripper (2)
- Connect and fasten signal column (3)

RoboCup (4)
Carry out relevant research and measure yourself against the world's elite researchers – in the RoboCup Industrial Logistics League, researchers from around the world test what production logistics 4.0 can offer.
In a smart factory, you carry out research into concepts and solutions for the challenges of the automated guided vehicle system of the future and perform tasks with a large number of variants. The multi-stage production process can be planned using up to three Robotinos per team with a free choice of sensors, and handling and software approach to fulfil the MES tasks. Every year, fascinating new challenges are created to ensure a demanding competitive atmosphere for everyone from beginners in robotics-related areas, right up to doctoral candidates and professors.
➔ robocup-logistics.org

Robotino® project ideas

The fast lane for your ideas
The modular structure, attachment devices and open software interfaces make Robotino® the ideal platform for project work.

With Robotino®, we provide the platform – now nothing stands in the way of developing exciting extensions. This is how fascinating projects are created. A few of them are described here.

The advantage for you:
- Reliable design – stable frame: no investment in mechanical maintenance
- Operating system based on Linux or Windows – for software reliability
- Powerful drive unit and high-quality omnidrive – concentrating on an intelligent solution for the project task

Technical defects, non-reproducible effects and undesired project delays are therefore a thing of the past.

Would you also like to implement projects with Robotino®?
E-mail: did@festo.com.

Do you have in-depth questions or want to discuss this topic further? If so, take a look at the forum and wiki at ➔ www.robotino.com

ProLog Factory
The ProLog Factory provides an outstanding new training platform for logistics. The material flow is implemented using Robotino® mobile robot systems, which also have an integrated lifting arm to pick up and deposit pallets at different stations for a specific job ➔ Pages 218 – 221.

CP Factory
Robotino is used on an industrial basis in the CP Factory. Based on the Smartsoft middleware, MES 4 uses one or more Robotinos® as an AGV via a fleet manager.

➔ wiki.openrobotino.org

Robot systems
LabVolt Series

Ideal platform for tackling industrial robotics

The robot system is a complete and affordable training program for the programming and operation of industrial robots. Through the curriculum and hands-on experience with the robot system, students learn to create automated work cells.

Precision-built robot
The articulated arm of the Robot represents an important step in automation and handling. A stepper motor, located in the base of the unit, provides horizontal rotation, while five additional stepper motors, located in the shoulder, provide precision movements of the articulations and end effector.

The robot has five axes of rotation plus a gripper and is able to use all joints simultaneously to perform a programmed move sequence. Each articulation can be controlled and moved independently. Movements of the joints are accomplished by belts through a series of gears, while the gripper mechanism is activated by cables and belt-driven pulleys.

The base of the unit includes one connector for an external stepper motor which can be used for further experimentation.

Control and simulation software
The software program RoboCIM 5150 uses 3D representations to simulate and control the mechanical and electrical characteristics of the equipment, allowing students to learn the fundamentals of robotics.

Teach pendant
The robot system is available with or without a teach pendant. The teach pendant is a hand-held terminal that can be used to control the robot instead of using a computer. It has a four-line, twenty-character LCD display for feedback to the operator. The programs created with the teach pendant can be uploaded from (or downloaded to) a computer through a USB connection.

120 V, 60 Hz	en	es	fr
Robot system (5150-1)	**582490**	**582492**	**582491**
Robot system with teach pendant (5150-2)	**582497**	**582499**	**582498**
220 V, 50 Hz			
Robot system (5150-1)	**582493**	**582495**	**582494**
Robot system with teach pendant (5150-2)	**582500**	**582502**	**582501**
240 V, 50 Hz			
Robot system (5150-1)	**582496**		
Robot system with teach pendant (5150-2)	**582503**		

Note: This product is currently not fully compliant with EU directives.

The most important components, at a glance:

Robot	582217
Teach pendant (only for the system with pendant)	582216
Large work surface	579848
RoboCIM 5150 software user guide	580451
Robot system user guide	580461
Introduction to robotics – Student manual, en	580454
Introduction to robotics – Instructor guide, en	580457

Additional required equipment to perform all exercises:

Rotary carousel	587703
Belt conveyor	587704
Gravity feeder for square parts	587710
Gravity feeder for cylindrical parts	587711
Pneumatic feeder kit for square parts	587712
Pneumatic feeder kit for cylindrical parts	587714

Related software programs:

RoboCIM 5150 Software, en	587738
Robotics System Software Development Kit	587771

Sturdy work surface
The robot system comes with a solid-metal, perforated work surface that can be put atop a regular work table or installed on one of the optional benches.

The robot and its optional external devices are equipped with location pins (or push-lock fasteners). These pins insert into the perforations of the metallic work surfaces. This easy-to-use mechanism ensures the accurate positioning of the equipment when repeating programs.

Topic coverage
– Introduction and familiarization
– Programming
– Program editing and control
– Industrial activity simulations

Main features
– Training program that allows easy learning of robotics basics
– Curriculum supported by a precision-built robot
– Durable steel and aluminum construction requiring minimal maintenance
– Color-coded I/O connection ports for ease of set-up
– Optional components for the creation of personalized work cells
– Included: student manual, instructor guide, user guides, and all leads and cables required to operate the system

RoboCIM 5150 Software – Simulate and control robot system

RoboCIM is a software program that simulates and controls the operation of the Robot and Servo Robot Systems from the LabVolt Series, as well as their optional external devices, such as Gravity Feeders, Belt Conveyors, or Linear Slides.

One of the key features of the RoboCIM Software is that it simulates the actual equipment with three-dimensional representations. Sophisticated mathematical models accurately simulate the mechanical and electrical characteristics of the equipment.

The RoboCIM Software allows users to interactively control and view the motion of the system. Programs can be created with the RoboCIM Software to control the equipment using either the text programming mode or the icon programming mode.

Key features
– Intuitive interface
– 3D virtual environment
– Easy integration and configuration of external devices
– Control the robot's movements using articular coordinates (as well as Cartesian coordinates for the servo robot)
– Work under Simulation or Control mode
– Create and save several workspaces and programs
– Creation of simple or complex programs
– Includes commands such as do, if, else, while, repeat, gosub, and many more.

RoboCIM 5150 Software

1-user license, en	587738
1-user license, es	587740
1-user license, fr	587739

Several license options are available.
Please contact us.

Servo robot systems
LabVolt Series

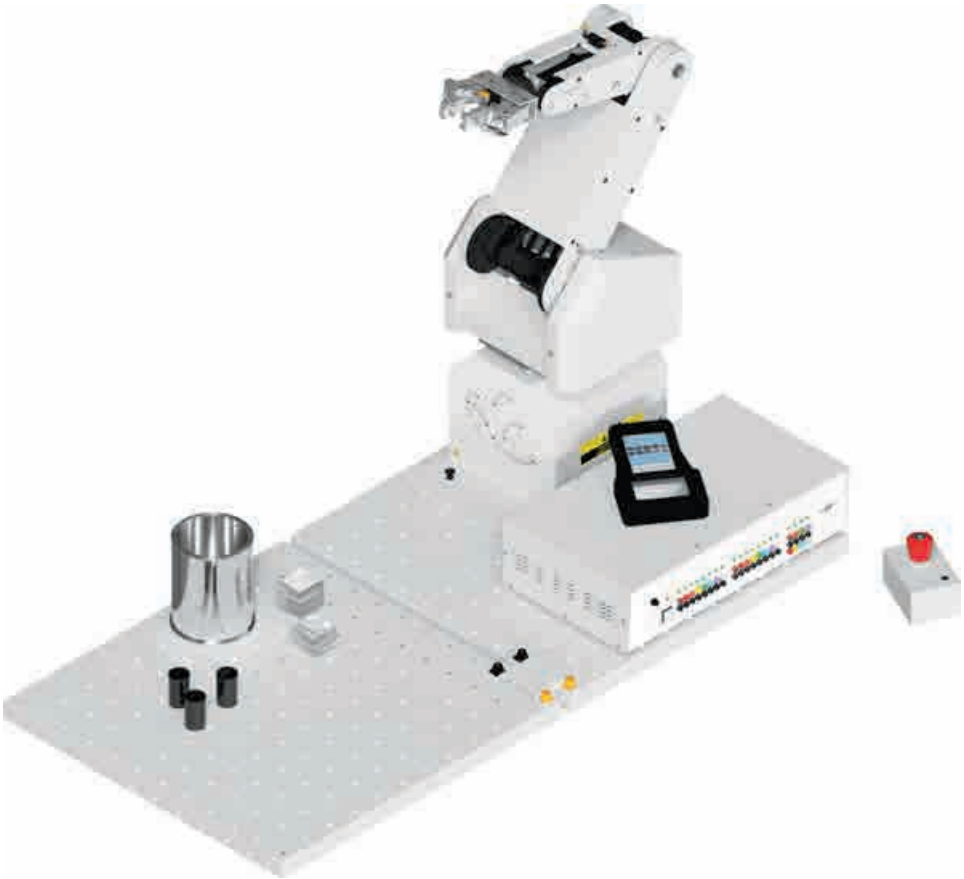

An introduction to industrial servo robots

The servo robot system is a complete training program for the programming and operation of industrial robots, through which students learn to create automated work cells ideal for flexible manufacturing systems and computer-integrated manufacturing.

Practical articulated arm
The servo robot is driven by servo motors, equipped with optical encoders to provide feedback to the controller, and has five axes of rotation plus a gripper. The servo robot has five axes of rotation plus a gripper. All joints can be used simultaneously to perform a sequence of moves. The servo robot can be operated in the articular mode, which allows each articulation to be controlled and moved independently, or it can be operated in the Cartesian mode, in which the gripper moves linearly, parallel to a specified axis.

Robot controller module
The robot controller module is provided with TTL inputs for the monitoring of input devices, TTL outputs to communicate with other robot units or control external accessories, relay outputs for the control of external accessories, and output ports for the control of external devices.

The module is also equipped with CNC ports, which enable communication with CNC machines. It also houses a USB port for program storage. The hand-held terminal connects to the controller via a serial communication port. It is used for programming points, saving programs, and general operation of the servo robot system.

120 V, 60 Hz	en	es
Servo robot system (5250-1)	**582504**	
Servo robot system with work surface (5250-2)	**582508**	**582509**
220 V, 50 Hz		
Servo robot system (5250-1)	**582505**	
Servo robot system with work surface (5250-2)	**582510**	
240 V, 50 Hz		
Servo robot system (5250-1)	**582506**	
Servo robot system with work surface (5250-2)	**582507**	

Note: This product is currently not fully compliant with EU directives.

The most important components, at a glance:

Servo robot	582221
Robot controller	582218
Storage/Work surface (only for the system with the surface)	582357
RoboCIM 5250 software user guide	580368
Servo robot system user guide	580351
Introduction to robotics – Student manual, en	580348
Introduction to robotics – Instructor guide, en	580349

Optional equipment ➔ Pages 250 –251

Rotary carousel	587772
Linear slide, short	587773
Linear slide, long	587774
Belt conveyor	587775
Gravity feeder for square parts	587710
Gravity feeder for cylindrical parts	587711
Pneumatic feeder kit for square parts	587712
Pneumatic feeder kit for cylindrical parts	587714

Related software programs:

RoboCIM 5250 Software, en	587810
Robot 5250 Software Development Kit	587841

Optional work surface
The servo robot system is available with or without a work surface. The two optional grid sheets are provided for the positioning of the servo robot when perforated work surfaces are not available. The servo robot and optional devices are equipped with location pins that insert into the perforations of the metallic work surfaces. This mechanism ensures the accurate positioning of the equipment when repeating programs.

Control and simulation software
The RoboCIM 5250 software can be used in place of the hand-held terminal. The program controls or simulates the motion of the servo robot. The convenient 3D virtual environment enables users to create simple or complex tasks.

Topic coverage
– Familiarization with the servo robot system
– Point-to-point and task programs
– Program editing
– Control overview
– Industrial application simulations (with gravity feeders, conveyors, pneumatic feeders, rotary carousels, and linear slides)

Main features
– Simulate and control the operation of a servo robot
– Curriculum is supported by an articulated robot
– Ability to control the movements using Articular and/or Cartesian coordinates
– Possible connection with other equipment, such as the LabVolt Series CNC Mill and Lathe (➔ Pages 134 – 139), to further expand the training capabilities
– Provided with student manual, instructor guide, user guides, as well as all the leads and cables required to operate the system

RoboCIM 5250 Software – Servo robot system

RoboCIM is a software program that simulates and controls the operation of the Robot and Servo Robot Systems from the LabVolt Series, as well as their optional external devices, such as Gravity Feeders, Belt Conveyors, or Linear Slides.

One of the key features of the RoboCIM Software is that it simulates the actual equipment with three-dimensional representations. Sophisticated mathematical models accurately simulate the mechanical and electrical characteristics of the equipment.

The RoboCIM Software allows users to interactively control and view the motion of the system. Programs can be created with the RoboCIM Software to control the equipment using either the text programming mode or the icon programming mode.

Key features
– Intuitive interface
– 3D virtual environment
– Easy integration and configuration of external devices
– Control the robot's movements using articular coordinates (as well as Cartesian coordinates for the servo robot)
– Work under Simulation or Control mode
– Create and save several workspaces and programs
– Creation of simple or complex programs
– Includes commands such as do, if, else, while, repeat, gosub, and many more.

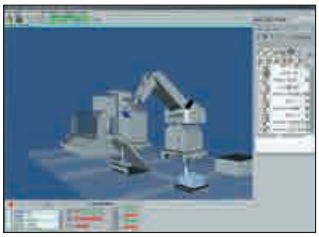

RoboCIM 5250 Software

1-user license, en	587810
1-user license, es	587812
1-user license, fr	587811

Several license options are available. Please contact us.

Optional accessories and equipment for Robot 5150 and Servo robot 5250 systems

1


5


2


6


3


7


4


8


1 **Rotary carousel**
The carousel demonstrates how parts can be transferred to and from a robot in a repetitive, rotational pattern. Its platter is driven by a DC stepper (for robot systems 5150) or servo (for servo robot systems 5250) motor. The carousel has a closed loop feedback system and a limit switch feedback for hard-home capabilities. Its operation is controlled by the robot controller.

For robot systems	**587703***
For servo robot systems	**587772***

2 **Gravity feeder**
This feeder is designed to feed square or cylindrical parts. It has a sensor switch and feedback cables for connection to the robot controller.

Feeder for square parts	**587710***
Feeder for cylindrical parts	**587711***

3 **Pneumatic feeder kit**
The kit is designed to feed square or cylindrical parts and includes a pneumatic feeder and controller. It consists of storage and feeder sections and a pneumatic cylinder. Both sections have microswitches to send feedback to the controller. When the controller detects that the feeder section is empty, it supplies compressed air to the pneumatic cylinder to push a part from the storage section into the feeder section.

Feeder for square parts	**587712***
Feeder for cylindrical parts	**587714***

4 **Magnetic gripper**
This gripper can be fixed to the wrist of the robot in place of the two-finger gripper. The electromagnet is powered via the external device output connector mounted on the shoulder of the robot. Only compatible with the 5150 robot.

Order no.	**587702***

Square part
One block of blue File-A-Wax® or clear Plexiglas® for various manipulations with the robot and servo robot.

Plexiglas	**789676**
Wax	**789752**

5 **Linear slide**
The linear slide provides linear travel to the servo robot and is available in two lengths: 1145 mm and 645 mm. It is driven by a DC servo motor directly coupled to a precision ball screw. It has a closed loop feedback system and a limit switch feedback for hard-home capabilities. It is controlled by the robot controller.

long	**587774***
short	**587773***

6 **Signal tower kit with control relay**
Three lights displaying visual signals that indicate the robot controller state. Up to five light modules can be stacked one upon another. Each module can be programmed without the need for special wiring or tools. The DC power supply and connection leads are included, as well as a control relay used to control external devices (only with the kit for the robot systems 5150).

For the robot systems 5150
120 V, 60 Hz

Order no.	**588558***

For the servo robot systems 5250
120 V, 60 Hz

Order no.	**588556***

For the servo robot systems 5250
220 V, 50 Hz

Order no.	**588557***

7 **Belt conveyor**
The conveyor has a self-contained power supply and interface electronics. The control panel has inputs for interfacing with the robot controller. The inputs enable the conveyor to be remotely controlled. It can also be used as a stand-alone unit. A movable limit switch detects the presence of parts on the belt.

For robots systems	**587704***
For servo robots systems	**587775***

8 **Microswitch**
The Microswitch is an SPDT switch with a wireform actuator. It can be used alone or can be installed on a belt conveyor.

Order no.	**587700***

* Note: These products are currently not fully compliant with EU directives.

1 **Storage/work surface**
Perforated metal surface on which the equipment can be installed. It can be put atop a regular work table or on one of the optional benches.
Size: 590 x 590 mm

Order no.	**582357***

2 **Large work surface**
Perforated metal surface on which the equipment can be installed. It can be put atop a regular work table or on one of the optional benches.
Size: 883 x 584 mm

Order no.	**579848***

3 **Work benches**
Solid metal benches that can accommodate one, two, and three large work surfaces, respectively. These work surfaces are not included with the Work Benches. Each bench is mounted on four heavy-duty, swiveling, lockable casters.

Bench for 1 work surface	**579820***
Bench for 2 work surfaces	**579821***
Bench for 3 work surfaces	**579822***

4 **Air compressor**
This quiet device is well suited for classroom and school laboratories. The circulator pump is available in different variants depending on AC power network voltages and frequencies.
Pressure: 800 kPa (120 psi) P_{max}

120 V, 60 Hz
– Performance: 42.5 l/min
– Reservoir capacity: 15.1 l

Order no.	**588108***

220 V, 50 Hz
– Performance: 70.8 l/min
– Reservoir capacity: 30 l

Order no.	**588109***

220 V, 60 Hz
– Performance: 42.5 l/min
– Reservoir capacity: 15.1 l

Order no.	**588107***

Spacer
Small metal piece with four push-lock fasteners that can be used to join two perforated work surfaces

Order no.	**582141***

Location tray
This tray helps position square parts manipulated with the servo robot. When a part is dropped on the location tray it automatically aligns in the square-stamped center.

Order no.	**777889***

Note: This product is currently not fully compliant with EU directives.

Robotics System Software Development Kit
The Robotics System Software Development Kit (SDK) is intended for developers who are interested in developing their own applications for the robot system. It includes a CD-ROM with all the files required to use the dynamic-link library (DLL) as an abstraction layer between the end-user application and the low-level communication protocol from and to the USB controller. A User Guide giving the details for each function in the library is provided.

Order no.	**587771***

Note: This product is currently not fully compliant with EU directives.

Robot 5250 Software Development Kit
The Robot 5250 Software Development Kit is used for developing custom applications. It includes a CD-ROM with all the files required to build programs to control the servo robot system using different programming languages. It also includes program samples that show how to interface the servo robot system with Visual C++, LabVIEW, MATLAB and Simulink. A User Guide giving the details for each function in the library is provided.

Order no.	**587841***

1


2


3


4


* Note: These products are currently not fully compliant with EU directives.

Learning systems for Industry 4.0

CP Lab

Industry 4.0 from the outset

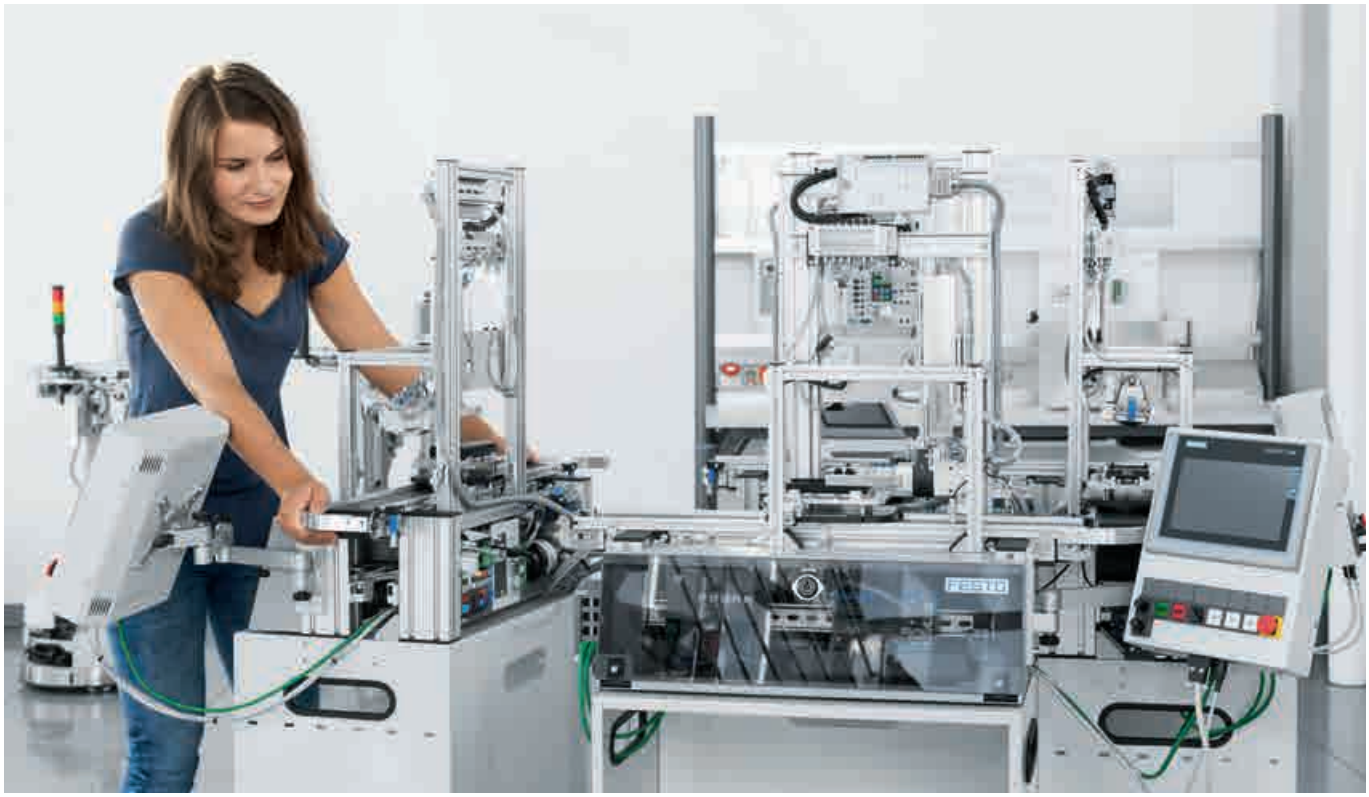

CP Lab – The compact Industry 4.0 learning system

The Cyber-Physical Lab is the professional and compact Industry 4.0 learning system from Festo Didactic. It includes all the technologies and components needed for communicating an in-depth knowledge of Industry 4.0.

The modular and flexible design has a range of learning scenarios, from individual pallet transfer systems with integrated controller right up to a connected production system with cloud services.

The benefits to you
- Modular design
- Flexible learning content
- Easily expandable
- State-of-the-art technology
- Designed for IoT devices
- Seamless transition to the CP Factory
- Expandable using mobile robotics
- Compact and space-saving size: can be used on laboratory tables or trolleys

System overview

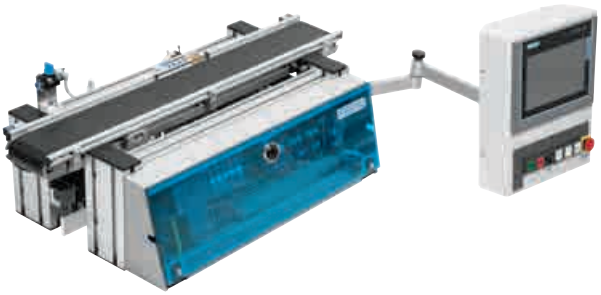

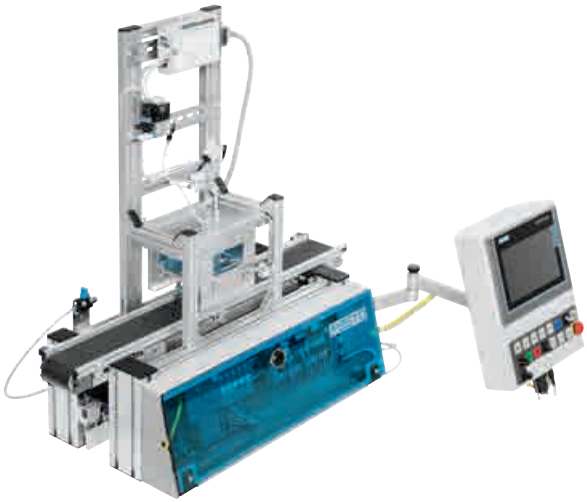

Main components
– Integrated controller
– Mono-belt transfer system
– Pallet stopper
– 3/2-way valve
– Inductive sensor
– Capacitive sensors at the start and the end of the belt
– RFID read/write system
– Binary ID system
– Optical transmitter and receiver
– AC or DC motor
– Motor controller, bi-directional with 2 speed levels
– Incremental shaft encoder
– IO-Link® master
– IO-Link® device
– Analog I/O using IO-Link®
– Control panel

CP Lab Pallet Transfer Systems

DC-ET200SP	**D12501**
AC-ET200SP	**D12508**
ET200SP	**D12509**
DC-CECC	**D12504**
AC-CECC	**D12510**
AC400-CECC	**D12511**
DC-IM155	**D12502**
AC-IM155	**D12512**
AC400-IM155	**D12513**

Options
Control variants:
– Festo CECC with 14 DI/8 DO
– Siemens S7 ET200SP CPU1512-F with 16 DI/16 DO
– Decentralized peripherals Siemens ET200SP with IM155 module

HMI variants:
– Siemens Touch Panel TP700, 7”
– Festo touch panel CDPX, 7”

Motor variants:
– DC motor
– Three-phase motor 230 V
– Three-phase motor 400 V for star/delta circuit

The following application modules can be selected
– Magazine
– Turning
– Camera inspection
– Tunnel furnace
– Drilling
– Pressing
– Measuring
– Workpiece output
– Labeling
– Pick-by-light
– Bottling

Other application modules on request.

Training content
– Design and structure of the CP Lab:
  – Sensors/actuators
  – Process modules
  – Conveyor belt
  – Network
  – Process and plant management level
  – MES
– Recording information using intelligent sensors
– Control using PLC
– Communication based on bus technologies
– Binary pallet identification
– Identification via RFID
– Plug & produce: quick integration of new application modules using cyber-physical systems
– Manufacturing execution system (MES): creating, managing, controlling and visualizing customer orders

Contact:
Festo Didactic Solution Center
→ did_sc@festo.com

CP Lab
An adaptable system

The flexibility of the factory layout is one of the most important features of Industry 4.0. The CP Lab modules can be flexibly combined and expanded in a variety of ways.

In series
Simply connecting the individual modules in series provides combinations of different sizes. This creates a wide range of expansion options.

In a rectangle
The individual modules can also easily be combined in a rectangle. This enables complete recirculating conveyor systems to be created with just four, six, eight or ten modules.

Combined with a mobile robot
The CP Bridge auxiliary module acts as an interface for transferring workpiece carriers to the Robotino® mobile robot system or the CP Factory. The mobile robots also enable production machines, manual workstations, storage systems and 3D printers to be integrated into the overall concept.

Application modules
For CP Lab and CP Factory

Magazine application module

The magazine application module can be mounted on both CP Factory basic modules and CP Lab pallet transfer systems. The front shell or rear shell workpieces are stored in a magazine shaft. If there is a pallet below the stacking magazine, the workpiece is separated and placed onto the pallet.

Technical data
– Structure: module frame made of aluminum profiles
– Digital connection: Syslink, IEEE 488 24-pin, 8 I/8 O
– Supply: 24 V DC
– Compressed air: 6 bar
– Feed separator actuator: pneumatic
– Z-axis actuator: pneumatic

Magazine application module	**D13007**
Magazine application module CPS	On request

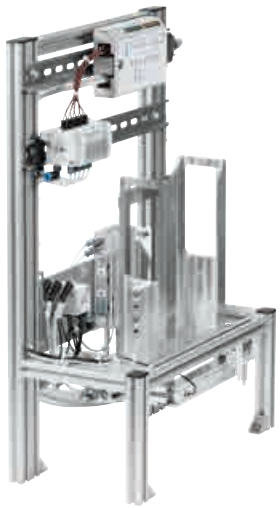

Drilling application module

The drilling application module can be mounted on both CP Factory basic modules and CP Lab pallet transfer systems. Two drilling spindles are advanced in the Z direction and moved in the X direction. This allows two (simulated) pairs of holes to be drilled into a workpiece.

Technical data
– Structure: module frame made of aluminum profiles
– Digital connection: Syslink, IEEE 488 24-pin, 8 I/8 O
– Supply: 24 V DC
– Compressed air: 6 bar
– Drilling unit: twin drilling head
– X-axis actuator: linear axis, pneumatic
– Z-axis actuator: linear axis, pneumatic

Drilling application module	**D13001**

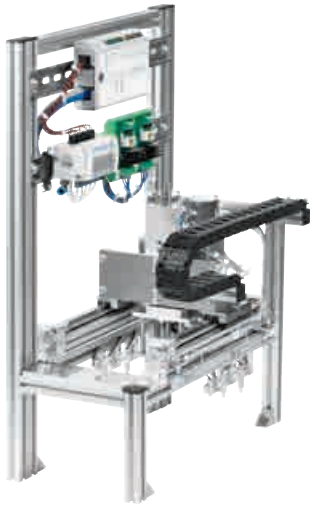

Drilling application module CPS

The drilling application module CPS can be mounted on both CP Factory basic modules and CP Lab pallet transfer systems. Two drilling spindles are advanced in the Z direction and moved in the X direction. Thus two pairs of holes can be drilled into a workpiece. The integrated intelligent controller with a web interface for the cyber-physical system (CPS) monitors the operating statuses of the individual actuators and is capable of automatically generating order suggestions for spare and wear parts via the web interface.

Technical data
– Structure: module frame made of aluminum profiles
– Controller: CECC, 8 I/8 O
– Interfaces: web server, CAN open, Ethernet/OPC UA, USB/IO-Link®
– Supply: 24 V DC
– Compressed air: 6 bar
– Drilling unit: twin drilling head
– X-axis actuator: linear axis, pneumatic
– Z-axis actuator: linear axis, pneumatic

Drilling application module CPS	**D13013**

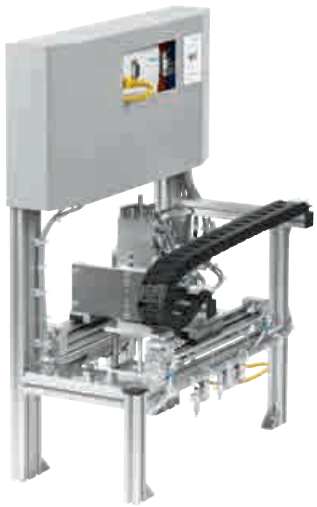

Application modules
For CP Lab and CP Factory

Turning application module

The turning application module can be mounted on both CP Factory basic modules and CP Lab pallet transfer systems. Workpieces are turned using a pneumatic handling system. The module is designed for handling cubic workpieces.

Technical data
- Structure: module frame made of aluminum profiles
- Digital connection: Syslink, IEEE 488 24-pin, 8 I/8 O
- Supply: 24 V DC
- Compressed air: 6 bar
- Actuator: pneumatic single-axis handling system with additional rotary drive and gripper

Turning application module	**D13002**
Turning application module CPS	On request

Muscle press application module

The muscle press application module can be mounted on both CP Factory basic modules and CP Lab pallet transfer systems. The pressing process is implemented via proportional pressure regulation. The force generated is measured precisely via a dynamometer. The pressing force is absorbed and dissipated via an additional guide and does not affect the conveyor.

Technical data
- Structure: module frame made of aluminum profiles
- Digital connection: Syslink, IEEE 488 24-pin, 8 I/8 O
- Analog connection: analog terminal, 4 I/2 O
- Supply: 24 V DC
- Compressed air: 6 bar
- Force measurement: 0 – 10 V analog
- Pressure regulation: 0.06 – 6 bar
- Pressing force: 630 N/muscle

Muscle press application module	**D13015**
Muscle press application module CPS	On request

Tunnel furnace application module

The tunnel furnace application module can be mounted on both CP Factory basic modules and CP Lab pallet transfer systems. It is used to control the temperature of workpieces up to a temperature of 80 degrees Celsius. The temperature control loop can be influenced manually using ventilation flaps. This allows disturbances to be simulated.

Technical data
- Structure: stainless steel with thermal insulation
- Digital connection: Syslink, IEEE 488 24-pin, 8 I/8 O
- Analog connection: analog terminal, 1 I
- Supply: 24 V DC
- Heating element supply: 230 V AC
- Heating capacity: configurable, 0.5 kW, 1 kW
- Temperature sensor: PT100
- Control: pulse-width modulation
- Temperature signal: 0 – 10 V analog
- Safety shutdown: at 90°

Tunnel furnace application module	**D13012**

Camera inspection application module

The camera inspection application module can be mounted on both CP Factory basic modules and CP Lab pallet transfer systems. The camera is used as an intelligent and universal sensor in the process for quality assurance via visual inspection.

Technical data
- Structure: module frame made of aluminum profiles
- Doors: dark transparent
- Supply: 24 V DC
- Digital interface: Syslink, IEEE 488 24-pin
- Light: built in
- Control: Syslink, Ethernet, CANopen

Camera inspection application module	**D13003**

Measuring application module

The measuring application module can be mounted on both CP Factory basic modules and CP Lab pallet transfer systems. Two laser distance sensors can be focused on 2 measurement points for specific parts. The two sensors are therefore mounted on an adjustable measurement stand.

Technical data
- Structure: module frame made of aluminum profiles
- Supply: 24 V DC
- Analog connection: analog terminal, 2 I
- Measurement signal: 0 – 10 V
- Control: Syslink

Measuring application module	**D13019**
Measuring application module CPS	On request

Workpiece output application module

The workpiece output application module can be mounted on both CP Factory basic modules and CP Lab pallet transfer systems. The application module is equipped with a two-axis handling system and is used to output workpieces on two roller conveyors. The workpiece output application module can be used as a manual work station for goods withdrawal.

Technical data
- Structure: module frame made of aluminum profiles
- Supply: 24 V DC
- Compressed air: 6 bar
- Digital connection: IEEE 488 24-pin, 8 I/8 O
- X-axis: stepper motor
- Z-axis: pneumatic
- Parallel gripper: pneumatic
- Control: Syslink

Workpiece output application module	**D13018**
Workpiece output application module CPS	On request

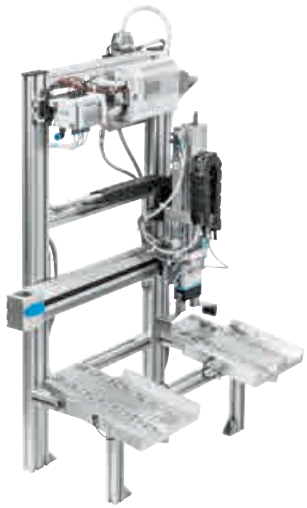

MES and Energy monitoring

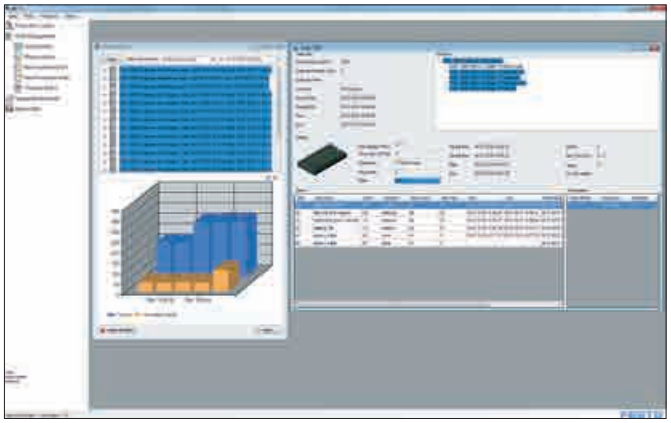

MES4

MES4 is a specially prepared manufacturing execution system (MES) with a new design for Industry 4.0 learning platforms. In MES4, orders can be started or finished at every station.

The database is open and can be written to and read from via SQL commands by external programs (e.g. order entry from ERP system). Work instructions for manual workstations can be created or adapted at any time. The individual controllers communicate with the MES4 via TCP/IP.

Scope of delivery
– MES software
– Dongle
– PC with TFT monitor

Training content
– Define and edit order workflows and process plans
– Read orders and update status
– Sort the order lines
– Write allocation of the goods carriers to the order
– Create a material master, including graphic representation of the workpiece
– Create machines, including costs and power consumption
– Create warehouse data and material buffer
– Create and manage customer data
– Define system layouts with icons
– Automatic routing per routing card and machine capabilities
– OEE, PLC and malfunction report generation, including graphic representation

Energy measurement system

The energy measurement system with evaluation software is used for flexible and mobile energy measurement. The system is equipped with an energy measurement device for electrical energy and sensors for recording the pressure consumption.

The measurement devices are connected to a CECC controller. It concentrates the energy data and sends it to the energy database via OPC UA for filing and evaluation.

Training content
– Recording, representing and analyzing power and energy measurements
– Providing measurements via Modbus®/TCP and OPC UA
– Determining the energy consumption per workpiece and process step

Technical data
– Structure: EduTrainer® Universal A4 rack
– Electrical power analyzer: PAC3200 with 1-phase measurement of current, voltage, active, reactive and apparent power
– Volume flow sensor for compressed air: thermal measuring principle
– Pressure sensor: Measurement range 0 – 10 bar, piezo-resistive measurement principle
– Controller: Festo CECC-LK
– Interfaces: USB, OPC UA, Modbus®, Ethernet TCP/IP

MES4 CP Lab, single license incl. PC	**D15005**
MES4 CP Factory, single license incl. PC	**D15002**
MES4 upgrade from CP Lab to CP Factory, single license without PC*	**D15006**
MES4 additional license, single license without PC**	**D15007**

* D15006 is only available if D15005 is present
** D15007 is only offered in combination with D15005 or D15002

Energy measurement system	**D34021**

Also order:

Energy monitoring package, incl. PC and software	**D35002**

CP Lab
Sample configurations

Variant 1, comprising:
– 6x CP Lab pallet transfer system
– 6x carriers, 700 x 350 mm
– 2x magazine application modules
– 1x drilling application module CPS
– 1x muscle press application module
– 1x turning application module
– 1x workpiece output application module
– 1x MES software, including PC
– 1x programming package
– 1x accessory package

Including commissioning and technical instruction on-site.

CP Lab – Variant 1	On request

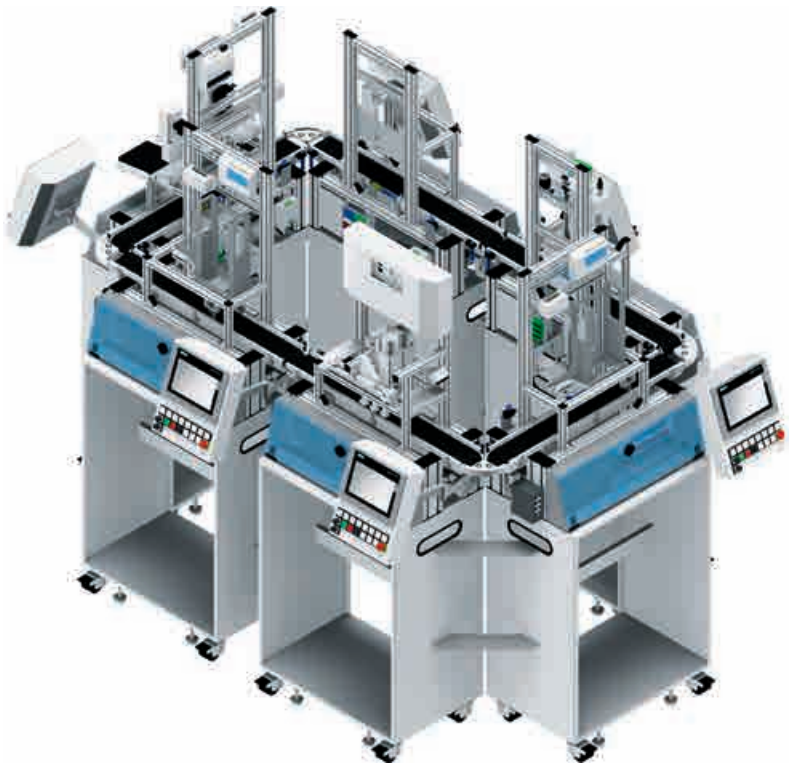

Variant 2, comprising:
– 8x CP Lab pallet transfer system
– 8x carriers, 700 x 350 mm
– 2x magazine application modules
– 1x measurement application module
– 1x drilling application module
– 1x muscle press application module
– 1x tunnel furnace application module
– 1x turning application module
– 1x workpiece output application module
– 1x MES software, including PC
– 1x programming package
– 1x accessory package

Including commissioning and technical instruction on-site.

CP Lab – Variant 2	On request

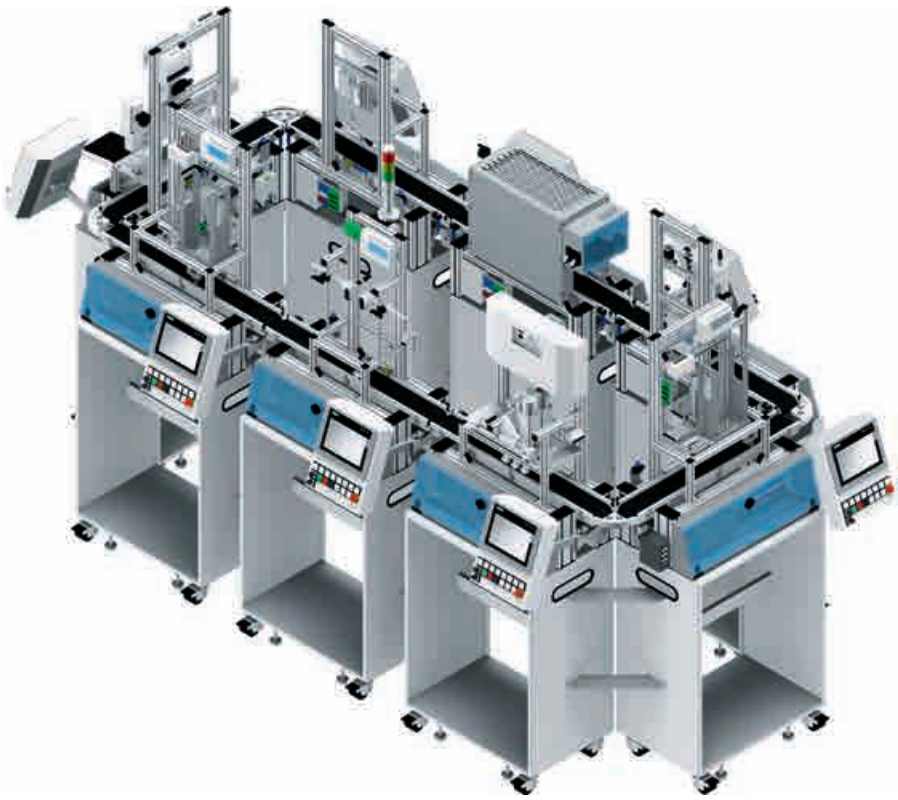

CP Lab
Sample configurations

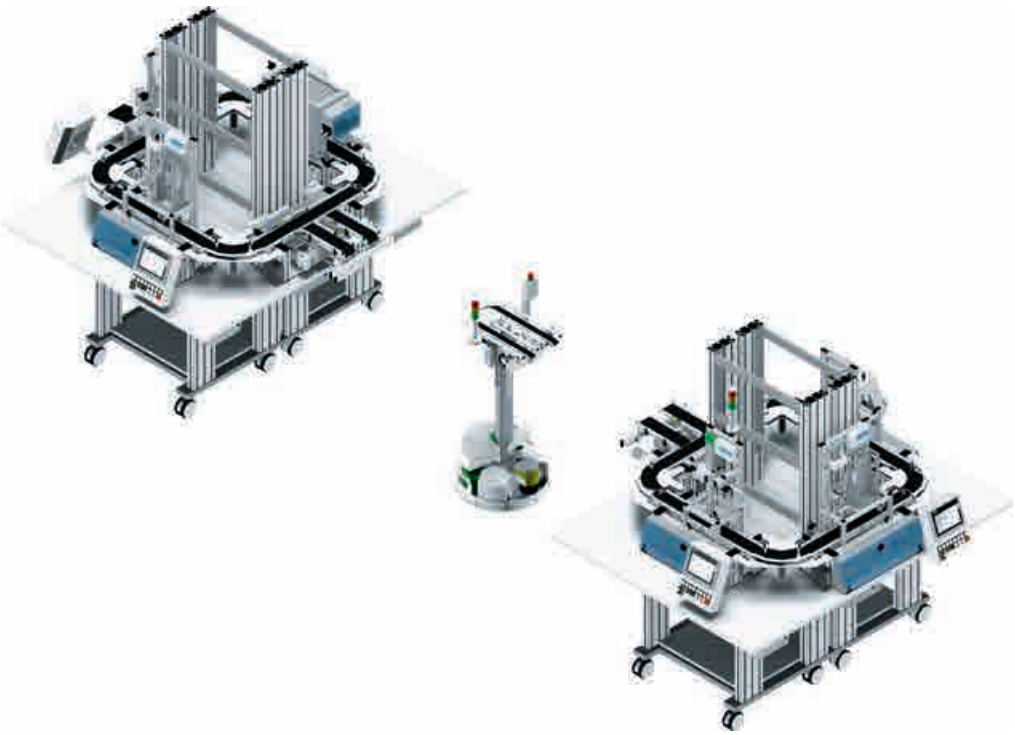

Variant 3, comprising:
- 2x linear basic module
- 1x deflector basic module
- 1x measurement application module
- 1x drilling application module CPS
- 1x camera inspection application module
- Workpiece output application module
- 1x magazine application module
- 1x muscle press application module
- 1x tunnel furnace application module
- 1x robot assembly cell
- 1x automatic pallet warehouse
- 1x MES software, including PC
- 1x programming package
- 1x accessory package

Including commissioning and technical instruction on-site.

CP Lab – Variant 3	On request

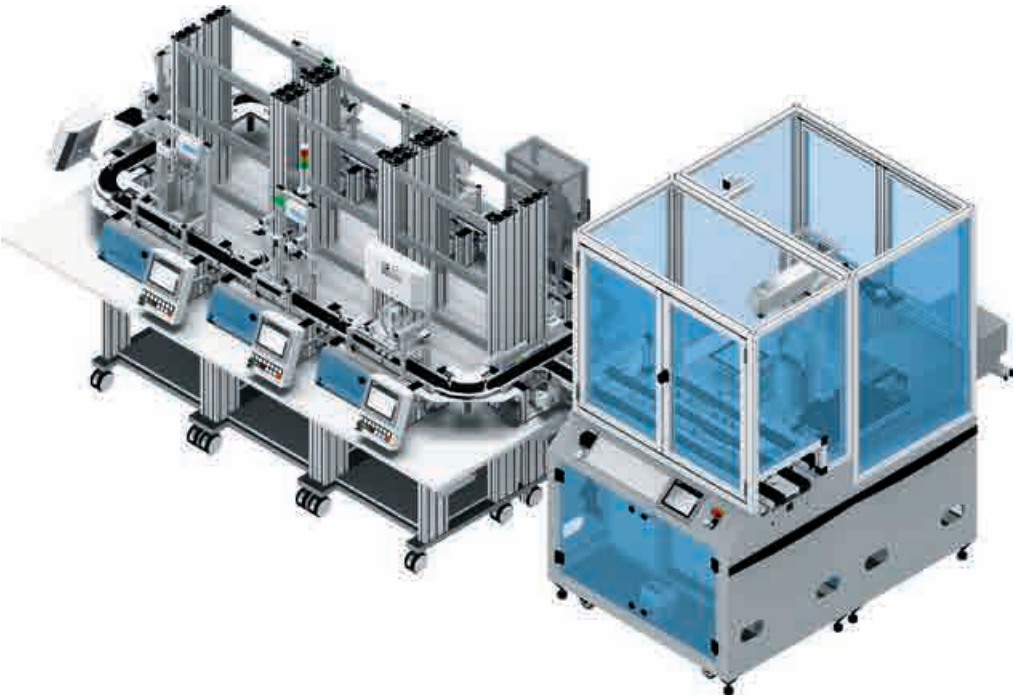

Variant 4, comprising:
- 2x linear basic module
- 3x deflector basic module
- 1x measurement application module
- 1x drilling application module CPS
- 1x camera inspection application module
- Workpiece output application module
- 1x magazine application module
- 1x muscle press application module
- 1x tunnel furnace application module
- 1x mobile robot for pallet transport
- 1x robot assembly cell
- 1x automatic pallet warehouse
- 1x MES software, including PC
- 1x programming package
- 1x accessory package

Including commissioning and technical instruction on-site.

CP Lab – Variant 4	On request

Variant 5, comprising:
- 7x CP Lab pallet transfer systems
- 6x system trainers with A4 frames
- 1x CP Bridge
- 1x CP Factory robot assembly cell
- 1x CP Factory deflector basic module
- 1x mobile robot for pallet transport
- 2x magazine application modules
- 1x measurement application module
- 1x drilling application module CPS
- 1x camera inspection application module
- 1x muscle press application module
- 1x tunnel furnace application module
- 1x workpiece output application module
- 1x MES software, including PC
- 1x programming package
- 1x accessory package

Including commissioning and technical instruction on-site.

CP Lab – Variant 5	On request

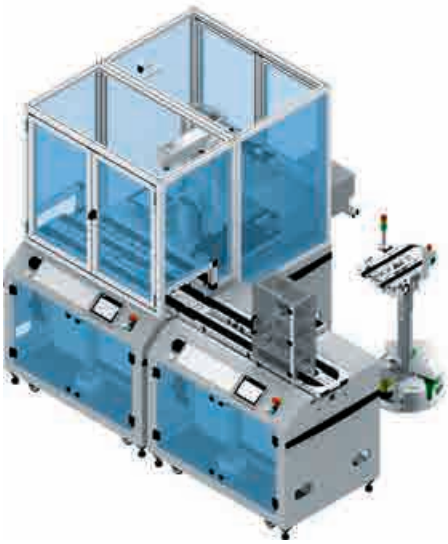

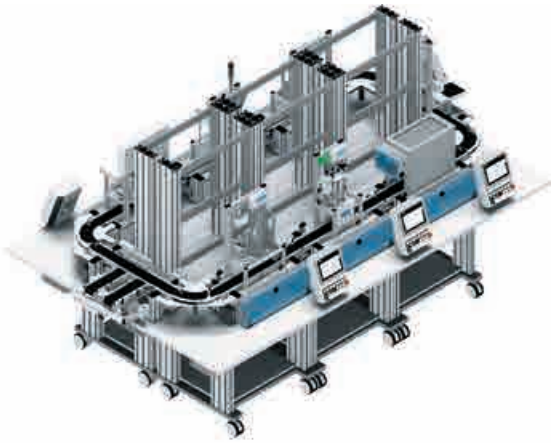

Variant 6, comprising:
- 6x CP Lab pallet transfer system
- 6x system trainers with A4 frames
- 2x CP Bridge
- 1x CP Factory automated pallet warehouse
- 1x CP Factory robot assembly cell
- 1x CP Factory deflector basic module
- 1x mobile robot for pallet transport
- 2x magazine application modules
- 1x measurement application module
- 1x drilling application module CPS
- 1x camera inspection application module
- 1x muscle press application module
- 1x tunnel furnace application module
- 1x MES software, including PC
- 1x programming package
- 1x accessory package

Including commissioning and technical instruction on-site.

CP Lab – Variant 6	On request

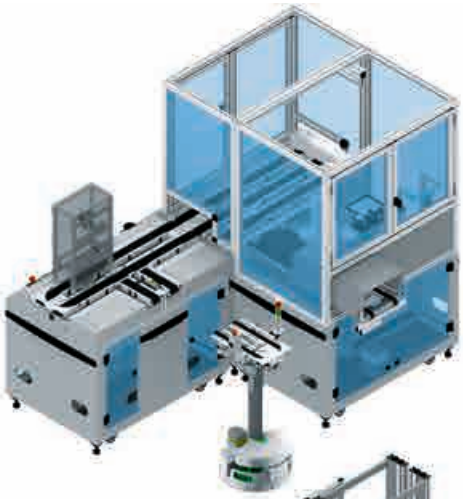

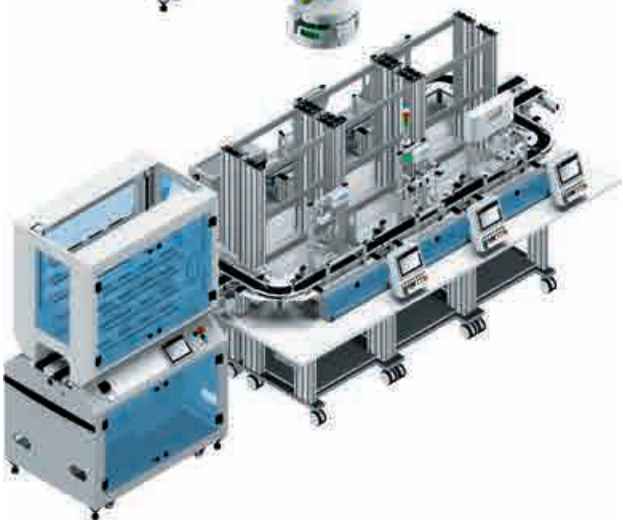

CP Factory

The Cyber-Physical Factory

Training area Assembly Line
Batch sizes of 1 and the assembly of product variants place demanding requirements on production in line with Industry 4.0. To meet these requirements, the CP Factory offers:
– Modularity
– Mobility
– Short setup times
– RFID technology
– Plug & produce
– Standard interfaces
– Service-oriented program architecture

Training area Production
CNC machines and flexible manufacturing systems play a major part in the creation of customized products down to batch size 1.

The CP Factory integrates CNC technologies for use in industrial training projects and scenarios. It therefore adds:
– Robot integration
– CAD/CAM products
– Simulation

Training area Quality Assurance
From a caliper gage to a fully-automatic 3D measuring machine – all standard measuring devices can be integrated into the CP Factory as a quality laboratory. The SPC module in the MES4 is used both to enter setpoints and carry out evaluations.

Training area ERP/MES
In a modern factory, intelligent machines and workpieces communicate with each other and with the IT systems ERP (enterprise resource planning) and MES (manufacturing execution system) both inside and outside the factory, up to cloud level.

MES4 is Festo's MES for a smart factory, based on an Access database. For SAP users, the training factory can be custom-connected to SAP ME. We can produce further MES and ERP links on request.

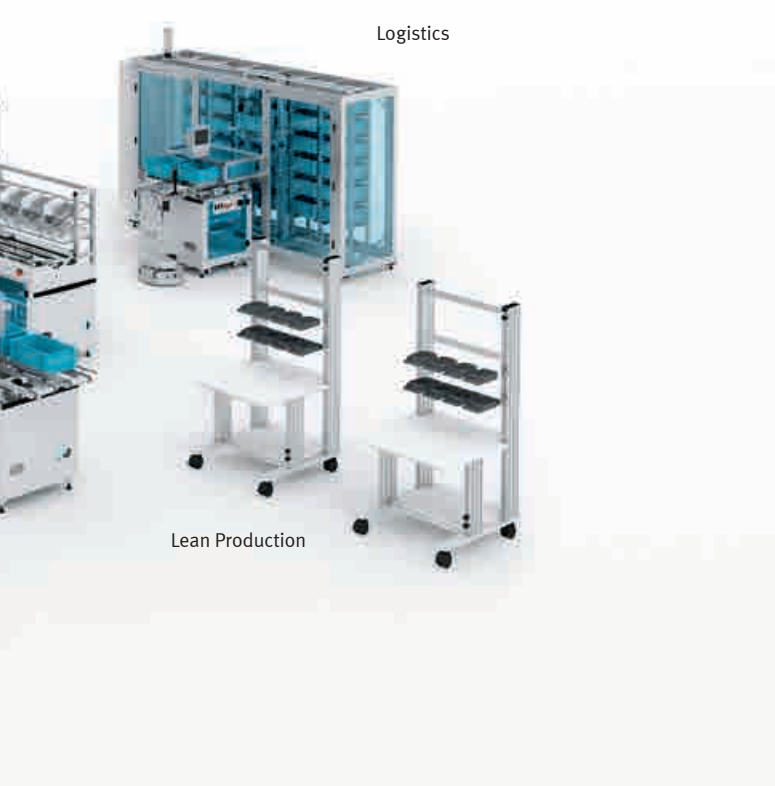

CP Factory – The universal Industry 4.0 training factory
CP Factory reflects the new developments in networked production for Industry 4.0 and offers a modular smart factory system for teaching and research purposes. The learning system includes not only the assembly line, but also different areas of production, such as lean production, logistics and quality assurance.

A modular system par excellence!
Our decades of experience in the construction of modular learning systems are reflected in many of the details of a CP Factory. All stations and application modules are equipped with the very latest industrial technology. The concept and equipment demonstrate our innovative approach.

Discover our comprehensive training program for the future
→ www.festo-didactic.com

Training area Lean Production
Industry 4.0 is also gaining ground in the field of lean production. Based on your requirements, we can offer facilities for producing anything from assembly cells to a supermarket with a "milkrun":
– Automated material supply for workstations
– RFID technology
– Avoiding errors through intelligent assembly monitoring
– Link to MES4
– Visualization

Training area Logistics
An intelligent flow of materials and networked logistics are important drivers for Industry 4.0. The CP Factory offers a versatile training and research platform for several different logistical problems:
– RFID
– MES
– Automatic warehouse
– Production stores and magazines
– Pallet transfer systems
– Autonomous transport robots

Systematic variety
The exceptional flexibility of a CP Factory system is based on the basic design of its cells, which is always identical: dimensions, track rollers, control cabinet, conveyor, control console, system cable.

As a stand-alone or system network
The basic features of the CP Factory determine the appearance of the system:
– Wide transfer belt for pallet transportation
– Application modules above the conveyor
– Variable system layout, providing freedom for designing individual, partner and group workstations

The standardized stations can be positioned differently. A laboratory made up of individual workstations can very quickly be turned into one or more production lines focusing on different areas of automation.

Training content stored in the application module
The core of the learning system is based around flexibly combinable modular stations, which are used to realize different application modules. These determine the training content provided by the stations. Thanks to the use of standard interfaces, application modules can be interchanged in just a few minutes. This allows fast conversion for different training situations and content.

CP Factory

The concept in detail

Cells on wheels
All CP Factory cells are equipped with rollers. This enables them to be freely positioned in the laboratory without tools or lifting trucks.

RFID process control
The product takes on process control in the CP Factory. To achieve this, the workpieces and controllers are equipped with RFID technology.

Optimum connections
The cells are supplied by a special system cable. There is no need for rewiring, fitting new tubing or additional installations when changing the layout. This saves valuable training time, and the laboratory remains free of additional supply ducts and trip hazards.

Modular control concept
The controllers in the CP Factory cells have a modular design. All control components are housed in the control cabinet:
- Controllers with PROFINET networking
- PROFIsafe components
- Drive components such as frequency converters, contactor controllers and servo motor controllers

The production line can be operated with or without a master control system.

Patented material flow
The passive workpiece holder routing is a patented development by our engineers. The unique option of using the Transfer Factory cells individually or in a network with no additional work is based on this development:
- Workpiece holders can circulate within a cell.
- Commissioning the subsystems is no problem.
- Subprocesses can be isolated without modifying the software.

CP Factory
Basic modules

CP Factory linear basic module

The linear basic module has two independent controllers and therefore offers two opposite, independent learning stations. Two conveyors run simultaneously in different directions and transport workpiece carriers to the next operating position.

Technical data
- Structure: steel sheet substructure, aluminum profiles
- Doors: transparent, lockable
- Dimensions: 1200 x 800 x 900 mm
- Electrical supply: 400 V AC, 3-phase
- Conveyor drives: 2x 24 V DC motors
- Pneumatic supply: 6 bar
- Touch panel: 2x TP700 Comfort
- Controller: 2x S7-1512 SP
- Application module: up to 2

Linear basic module	**D12001**

Also order:

Application modules ➔ Pages 271 – 272	

CP Factory deflector basic module

The deflector basic module opens the doors to new layouts and can be used in the branch as a docking module for the mobile robot. Straight production lines, angled layouts (90°) or branches can be implemented quickly.

Technical data
- Structure: steel sheet substructure, aluminum profiles
- Doors: transparent, lockable
- Dimensions: 1200 x 800 x 900 mm
- Electrical supply: 400 V AC, 3-phase
- Conveyor drives: 2x 24 V DC motors
- Pneumatic supply: 6 bar
- Touch panel: 1x TP700 Comfort
- Controller: 1x S7-1512 SP
- Application module: 1

Deflector basic module	**D12004**

Also order:

Application modules ➔ Pages 271 – 272	

Optional:

Docking kit for the mobile robot	D14018

CP Factory bypass basic module

The bypass basic module has an additional bypass conveyor, and therefore offers an additional lane for production. That optimizes production processes and avoids jams.

Technical data
- Structure: steel sheet substructure, aluminum profiles
- Doors: transparent, lockable
- Dimensions: 1200 x 800 x 900 mm
- Electrical supply: 400 V AC, 3-phase
- Conveyor drives: 3x 24 V DC motors
- Pneumatic supply: 6 bar
- Touch panel: 2x TP700 Comfort
- Controller: 2x S7-1512 SP
- Application modules: up to 2

Bypass basic module	**D14008**

Also order:

Application modules ➔ Pages 271 – 272	

CP Factory

Production, assembly, storage

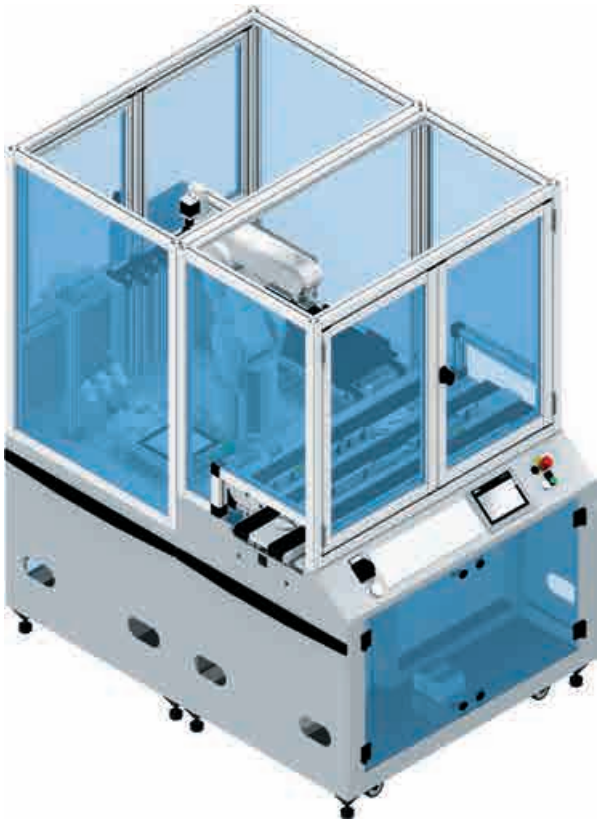

CP Factory robot assembly cell

The robot assembly cell is equipped with everything necessary for robotics training. Completely enclosed and with safety doors, they facilitate totally safe working. Hot topics such as camera-supported assembly, use of gripper change systems, camera tracking, producing batch sizes of 1 and much more can be taught in a practical way using the robot assembly cell.

The cell has two conveyors which run in opposite directions. A third conveyor forms a bypass for the workpiece carrier, fed to the robot as an assembly order. Even with longer assembly processes, this prevents jams in the material flow. The workpieces (PCBs) are supplied manually or with a mobile robot.

Technical data
- Structure: 2x substructure of steel sheet and aluminum profiles, detachable
- Doors: transparent, lockable
- Dimensions per substructure: 1200 x 800 x 1800 mm
- Electrical supply: 400 V AC, 3-phase
- Conveyor drives: 3x 24 V DC motors
- Pneumatic supply: 6 bar
- Touch panel: 1x TP700 Comfort
- Controller: 1x S7-1512 SP
- Switch: 8x
- Material feed: double conveyor system
- Gripper: 3 different grippers
- Gripper change: automatic
- Vision system: color sensor
- Camera resolution: 752 x 480 pixels
- Camera interface: Ethernet/CAN-bus
- Refresh rate: 150 images/sec.

Robot assembly cell with Mitsubishi RV-4FL	**D12006**
Other robots	On request
Optional	
Docking kit for the mobile robot	**D14018**

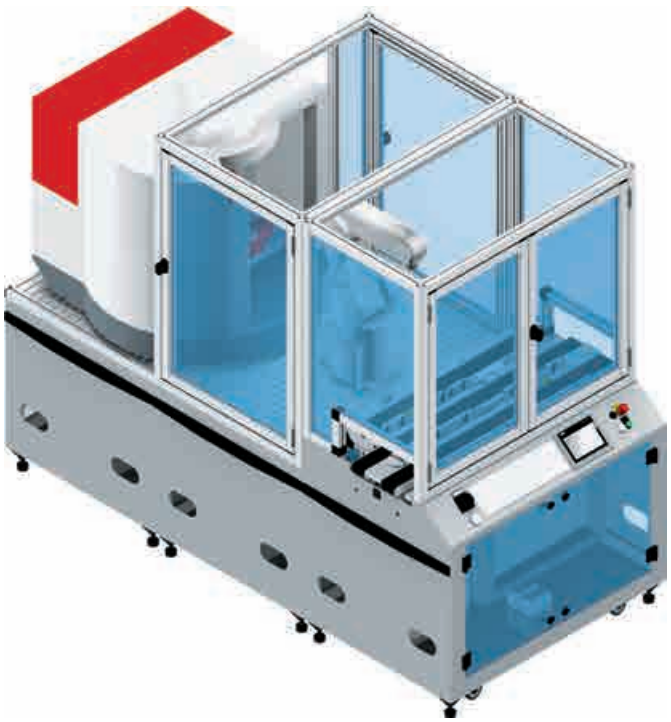

CP Factory robot loading cell, in-line

The robot loading cell is used in conjunction with a CNC milling machine and serves to load workpieces into the CNC milling machine via a 6-axis industrial robot. Training content like robot programming, flexible manufacturing, process planning and one-off production are taught with the robot loading cell.

The cell has two conveyors which run in opposite directions. A third conveyor forms a bypass for the workpiece carrier, fed to the robot as a CNC order. Even with longer CNC processes, this prevents jams in the material flow.

Technical data
- Structure: 3x substructure of steel sheet and aluminum profiles, detachable
- Doors: transparent, lockable
- Dimensions per substructure: 1200 x 1600 x 1800 mm
- Electrical supply: 400 V AC, 3-phase
- Conveyor drives: 3x 24 V DC motors
- Pneumatic supply: 6 bar
- Touch panel: 1x TP700 Comfort
- Controller: 1x S7-1512 SP
- Switch: 8x

Robot loading cell with Mitsubishi RV-4FL	**D12011**
Other robots	On request
CNC milling machine CONCEPT MILL 55	**C34056**
Other machines	On request

CP Factory automatic pallet warehouse

The automatic warehouse is mounted on a linear basic module and has a Cartesian robot system for stacking and removing pallets. Up to 32 pallets can be stacked and removed. Stock administration is implemented in MES4. Training content like safety engineering, servo drive, stock administration and positioning technology are taught clearly.

Technical data
- Structure: steel sheet substructure, aluminum profiles
- Doors: transparent, lockable
- Dimensions: 1200 x 1600 x 1800 mm
- Electrical supply: 400 V AC, 3-phase
- Conveyor drives: 2x 24 V DC motors
- Pneumatic supply: 6 bar
- Touch panel: 1x TP700 Comfort
- Controller: 1x S7-1512 SP
- Storage slots: 2x 16
- Switch: 8x
- Axis controller: 2x servo axis controllers

CP Factory automatic pallet warehouse	**D12002**

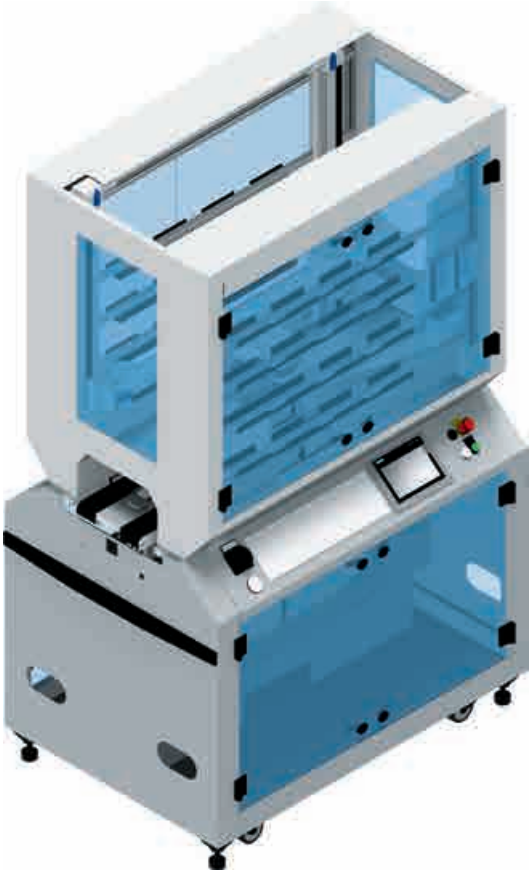

Accessories

1

3

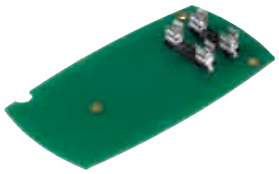

2

4

Workpiece carrier
The workpiece carrier (WC) is used for controlled and accurate transport of workpieces or pallets with workpieces. For identification, the WC has an RFID tag and a 4-bit code.

Technical data
– Structure: polymer, glass-fiber-reinforced plastic
– Dimensions: 100 x 160 x 15 mm
– BCD code: codeable, 4 screws
– Track width: 80 mm
– Transport weight: max. 3 kg

Order no.	**D12703**

Pallet
The pallet is used for controlled and accurate transport and storage of workpieces.

Technical data
– Structure: aluminum
– Dimensions: 100 x 160 x 5 mm
– Workpiece nest: changeable, screw-mounted

Order no.	**D12704**

Workpiece set
The entire workpiece set, comprising the rear shell, PCB, electronic component and front shell, is used to represent many relevant process steps such as milling, drilling, marking, tempering, checking, turning, mounting, fitting, pressing and others.

1 **Workpiece "front shell"**
The front shell is part of the workpiece set.

Technical data
– Material: polymer
– Dimensions: 110 x 60 x 10 mm

black	**D12705**
gray	**D12709**
blue	**D12711**
red	**D12713**

2 **Workpiece "rear shell"**
The rear shell is part of the workpiece set.

Technical data
– Material: polymer
– Dimensions: 110 x 60 x 10 mm

black	**D12706**
gray	**D12710**
blue	**D12712**
red	**D12714**

3 **Workpiece "PCB"**
The PCB is part of the workpiece set.

Technical data
– Structure: PCB
– Dimensions: 100 x 55 mm

Order no.	**D12707**

4 **Workpiece "Fuse"**
A fuse set, comprising 10 fuses, is part of the workpiece set.

Technical data
– Structure: micro fuse

Order no.	**D12708**

CP Factory
Sample configurations

Variant 1, comprising:
– 1x linear basic module
– 1x magazine application module
– 1x muscle press application module
– 1x robot assembly cell
– 1x automatic pallet warehouse
– 1x MES software, including PC
– 1x programming package
– 1x accessory package

Including commissioning and technical instruction on-site.

CP Factory – Variant 1	On request

Variant 2, comprising:
– 1x linear basic module
– 1x deflector basic module
– 1x magazine application module
– 1x muscle press application module
– 1x tunnel furnace application module
– 1x robot assembly cell
– 1x automatic pallet warehouse
– 1x MES software, including PC
– 1x programming package
– 1x accessory package

Including commissioning and technical instruction on-site.

CP Factory – Variant 2	On request

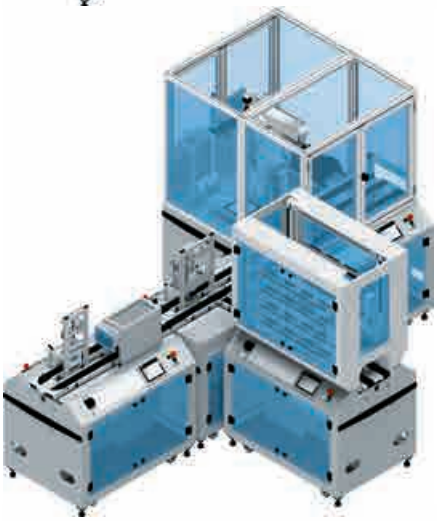

Variant 3, comprising:
– 2x linear basic module
– 1x deflector basic module
– 1x measurement application module
– 1x drilling application module CPS
– 1x camera inspection application module
– Workpiece output application module
– 1x magazine application module
– 1x muscle press application module
– 1x tunnel furnace application module
– 1x robot assembly cell
– 1x automatic pallet warehouse
– 1x MES software, including PC
– 1x programming package
– 1x accessory package

Including commissioning and technical instruction on-site.

CP Factory – Variant 3	On request

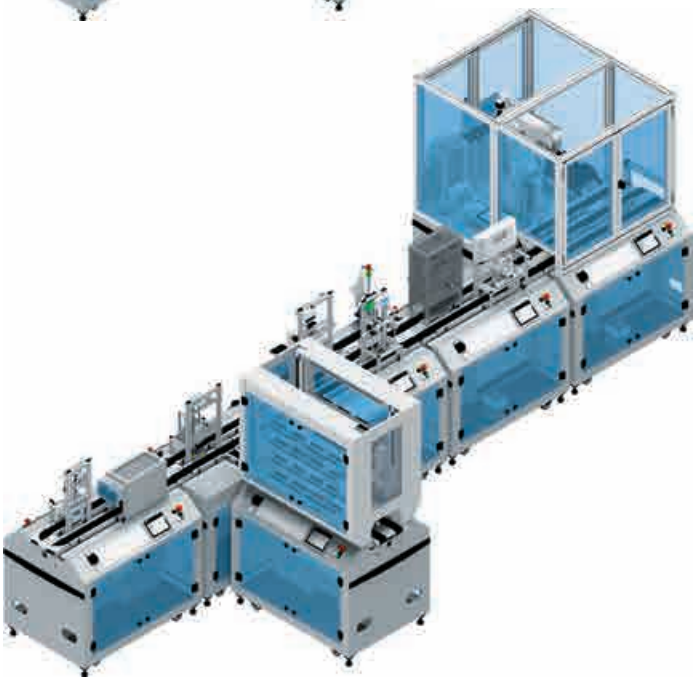

CP Factory
Sample configurations

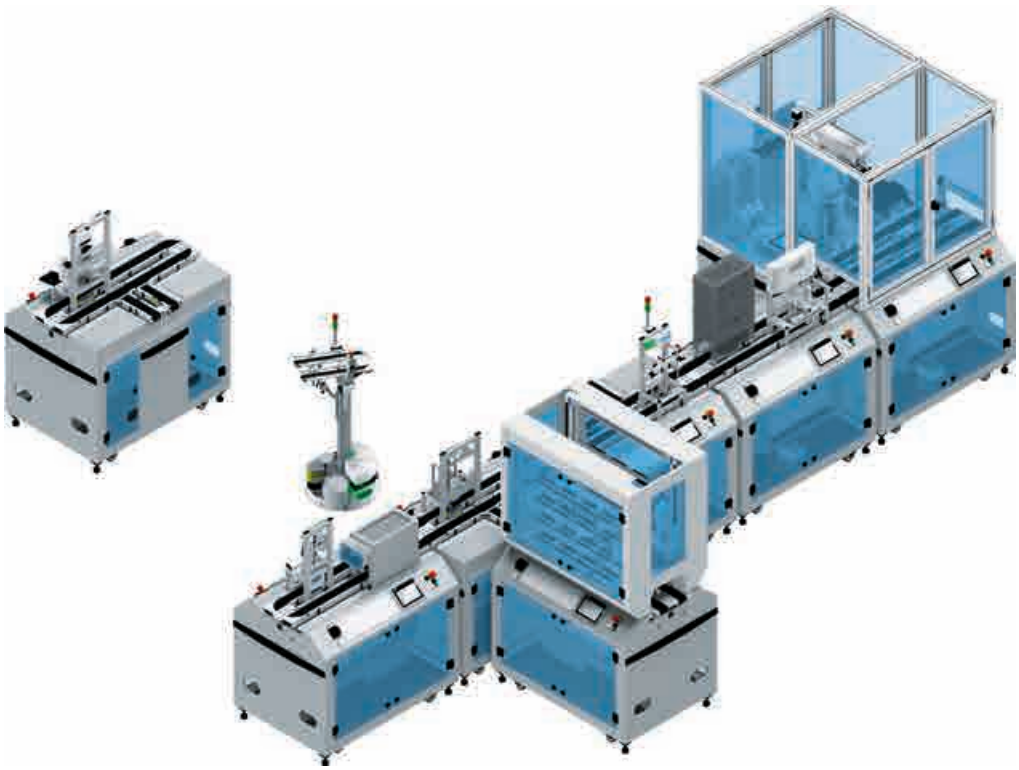

Variant 4, comprising:
- 2x linear basic module
- 3x deflector basic module
- 1x measurement application module
- 1x drilling application module CPS
- 1x camera inspection application module
- Workpiece output application module
- 1x magazine application module
- 1x muscle press application module
- 1x tunnel furnace application module
- 1x mobile robot for pallet transport
- 1x robot assembly cell
- 1x automatic pallet warehouse
- 1x MES software, including PC
- 1x programming package
- 1x accessory package

Including commissioning and technical instruction on-site.

CP Factory –Variant 4	On request

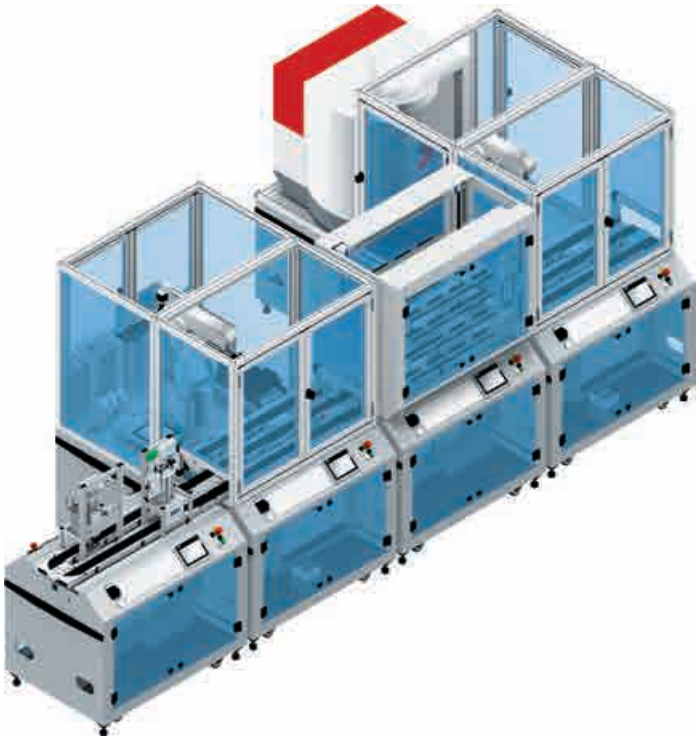

Variant 5, comprising:
- 1x linear basic module
- 1x magazine application module
- 1x muscle press application module
- 1x robot assembly cell
- 1x robot loading cell, in-line with CNC Mill 55
- 1x automatic pallet warehouse
- 1x MES software, including PC
- 1x programming package
- 1x accessory package

Including commissioning and technical instruction on-site.

CP Factory – Variant 5	On request

CP Factory
Individual solutions

Requirements analysis
Standard solutions might seem like a good value at first glance, but at Festo we focus on the long-term benefit for the customer. For this reason, a qualified requirements analysis is performed before each CP Factory quotation. In this analysis, experienced project advisors discuss the expectations for the new training equipment with the customer and share insights from everyday use in order to avoid poor investments.

Consulting
On the basis of the requirements analysis, the customer receives expert advice about the suitable training equipment. Our primary objective here is to meet the customer's objectives, irrespective of the product range. Because Festo cooperates with a number of renowned partners, we will design the optimal solution for you. Festo is a Siemens Automation solution partner.

Engineering service
The experienced technicians and engineers at Festo Didactic are specialists in planning and equipping learning systems and have at their disposal powerful, state-of-the-art tools. PLC and robot programming systems, simulation systems, EPLAN and CAD programs are efficient tools for translating customer requirements into reality. Festo will help you to implement your ideas – quickly, reliably and cost-effectively.

System integration
Existing system parts can often be integrated as subsystems, provided suitable interfaces are available. This protects earlier investments.

Customized training
You know your strengths – and your weaknesses. Festo gives you the opportunity to define your training profile. The result? A training course tailored to your exact personal requirements!
– Networking
– Robotics
– Cyber-physical systems
– IT systems
– MES production control systems
– Energy efficiency
– Image processing
– PLC programming
– Fieldbus
– RFID technology
– System simulation
– Troubleshooting
– Logistics, etc.

Upgrade
Festo Didactic offers planning reliability and continuity. Systems can be gradually expanded and updated over a number of years. Give us a call – we're happy to assist you with your stage-by-stage project planning.

CP Factory – Industry 4.0 research and learning platform
The learning platform is used worldwide for research and technical training in the areas of production and automation technology as well as for mechatronics.

Services

Services

Make more of your potential

Service solutions tailored to your equipment and needs. A qualified team provides services that will enable you to maximize the capacity of your learning systems.

Knowing that your equipment is effectively maintained will allow you to focus on what is most important: teaching.

Worldwide availability? No problem.
We are able to deliver our training services around the world in local languages to the high standard that both you and we require.

Installation, commissioning and training will be carried out by qualified technicians in order to guarantee safe, efficient setup and make sure your team can use your new products straight away.

Free software, demos and reading samples – For example, EasyVeep is a new graphic 2D process simulation software containing a number of attractive examples for PLC training that is available for download free of charge. You can sample many of our software products and all our books free of charge on the Internet using test and demo versions.

Service solutions –
To suit your needs
– Delivery free of charge
– Commissioning
– Training
– Demos and reading samples
– Seminars
– Service contracts
– Extended warranty

Certification
Instructor certification trainings help you to get the best possible use out of your new learning system. Our qualified instructors introduce the equipment and provide the training material, as well as explaining how to perform the exercises and integrating them quickly into your existing training programs. These training sessions can be conducted on your premises, at a Festo core location, or via video conference.

Festo is a global engineering and manufacturing company that maintains its own global training and consulting teams for customers all around the world.

Operating in the same economic sector and environment as our customers, we have a level of understanding and insight into your challenges that allows us to meet your needs by providing targeted training and consulting solutions.

Customized service contracts give you peace of mind as our team takes care of your equipment. Available services include on-site hardware maintenance and calibration, warranty extension and repairs, continuous instructor training, and much more.

Personal advice
We will be glad to provide a consultation regarding concept and planning on site.

For more information, please contact your Festo contact person or write to: seminare@festo.com

Notes

Notes

Publisher

Festo Didactic SE
P.O. Box 10 07 10
73707 Esslingen
Rechbergstraße 3
73770 Denkendorf
Germany

Edition: August 2017

Terms and conditions of sale

➔ www.festo-didactic.com

As a result of continuous development and research work technical specifications and illustrations are subject to change. They are not binding. The specified data serves purely as a product description and is no guarantee in a legal sense.

A&P INSTRUMENT CO., LTD.
科 藝 儀 器 有 限 公 司
地址：香港九龍灣啟祥道 9 號信和工商中心 1 樓 68 室
Room 68, 1/F Sino Industrial Plaza,
9 Kai Cheung Road, Kowloon Bay, Kowloon
Tel: (852) 2755 6578 E-mail: info@anp.com.hk
Fax: (852) 2755 4549 http://www.anp.com.hk/

Festo Didactic SE

Rechbergstraße 3
73770 Denkendorf
Germany
Tel. +49 (711) 3467-0
Fax +49 (711) 347-54-88500
did@festo.com

Festo Didactic Inc.

607 Industrial Way West
07724 Eatontown,
New Jersey
United States
Tel. +1 (732) 938-2000
Fax +1 (732) 774-8573
services.didactic@festo.com

Festo Didactic Ltée/Ltd

675, Rue du Carbone
Québec, Québec, G2N 2K7
Canada
Tel. +1 (418) 849-1000
Fax +1 (418) 849-1666
services.didactic@festo.com

www.festo-didactic.com
www.labvolt.com