Document Version 3.0

A&P INSTRUMENT®
科 藝 儀 器

E BLOCKS 2

DATASHEET

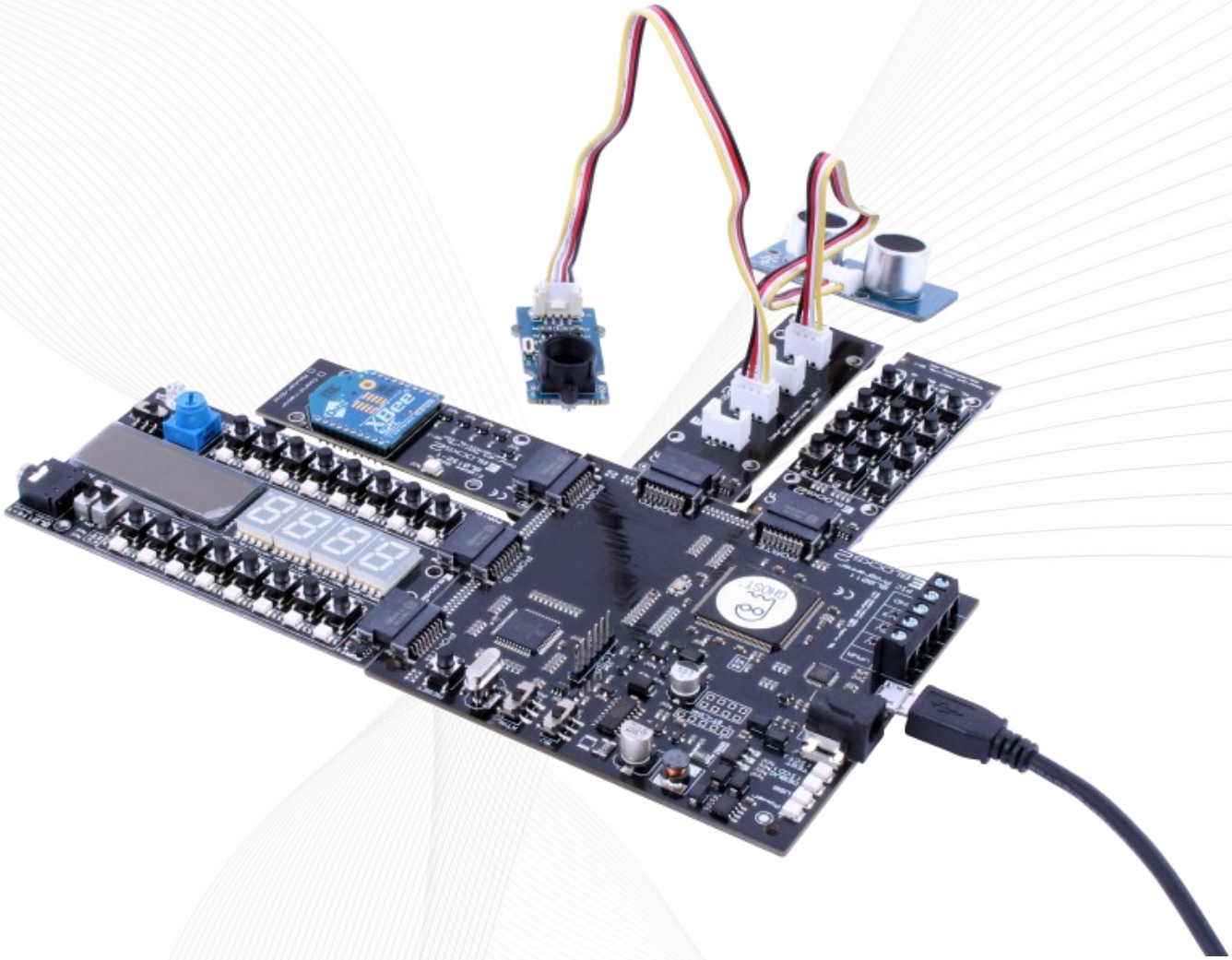

MATRIX

Contents

A&P INSTRUMENT® 科藝儀器

About E-blocks

What Are E-blocks? 3
Connector Pinout 5
New in E-blocks 2 6

Conversion from E-blocks to E-blocks 2

BL0113 - E-blocks Upstream to E-blocks 2 Downstream 7
BL0119 - E-blocks 2 Upstream to E-blocks Downstream 8

Downstream Boards

BL0106 - Click 9
BL0114 - Combo 10
BL0117 - Proto 13
BL0127 - Actuators 14
BL0129 - Grove 16
BL0131 - GSM 19
BL0136 - WIFI 20
BL0138 - Keypad 21
BL0139 - Mono Graphical LCD 22
BL0140 - CAN Bus 23
BL0145 - Push Switch x 8 24
BL0152 - Zigbee 25
BL0154 - Micro SD Card 26
BL0155 - Expander 27
BL0156 - Splitter 28
BL0157 - Colour Graphical LCD 29
BL0158 - Upstream Connector 30
BL0161 - Manual Patch 31
BL0162 - Servo Motor 32
BL0167 - LED x 8 33
BL0169 - LCD 34
BL0170 - Bluetooth 35
BL0173 - Screw Terminals 36
BL0183 - Relay 37
BL0187 - Ethernet 38
BL0197- RFID 39

Upstream Boards

BL0011 - 8-Bit PIC Programmer - Fixed SMD IC 40
BL0032 - 16-Bit dsPIC Programmer 44
BL0036 - Raspberry Pi Shield 48
BL0055 - Arduino Uno Shield 52
BL0061 - ST ARM Programmer 56
BL0080 - 8-Bit PIC - DIL IC 60
BL0086 - 8-Bit AVR Programmer 64

Additional Information

Reprogramming using mLoader 68
Reprogramming using Flowcode 68
Ghost - Auto Board ID 69
Ghost - In Circuit Debug (ICD) 70
Ghost - In Circuit Test (ICT) 71
LCD - Embedded Font Set 73

A&P INSTRUMENT®
科 藝 儀 器

What Are E-blocks?

E-blocks2 is the latest generation of microcontroller boards from Matrix. E-blocks2 boards give you a choice of upstream programmer board. The system then allows users to connect their choice from a range of downstream boards, and build a complete system in a matter of minutes. The E-blocks2 system is ideal for everyone, from those learning in an educational environment to engineers in the industrial world. Use of E-blocks is well supported with complementary ranges of software including PIC, dsPIC, ARM and AVR Arduino IDE, Flowcode, and support for Grove® sensors. Technical support is available from our dedicated team through our forums.

Upstream E-blocks

These contain the microcontroller / microprocessor brain that is used to drive the entire system. Usually this is loaded with user firmware to drive the required embedded functionality. These boards allow the host processor to be connected to multiple downstream boards via the microcontroller / microprocessor I/O pins. Upstream boards have facilities to re-program the host processor as well as providing debugging options such as Ghost's In Circuit Debug (ICD) and In Circuit Test (ICT) functions when used with Flowcode.

Downstream E-blocks

These contain either a modularised specific feature which you want to connect to your host processor or a collection of features. For example LEDs, Switches, Displays, Communications, Sensors through to the Combo and Actuators boards. Each E-blocks 2 downstream board features an Auto ID device allowing the complete system to be analysed for potential issues and to aid in pre-configuring the software for the upstream firmware.

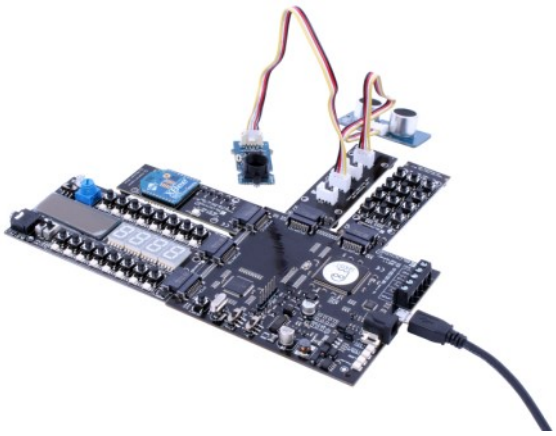

A&P INSTRUMENT®
科 藝 儀 器

Designed for Education

E-blocks2 are ideal for learning about electronic systems, digital electronics and for rapid prototyping.

The boards fit together in a flat 2D layout manner allowing the entire system to be easily seen and understood.

The boards are designed for use in lab style environments and are designed to be both electrically and physically rugged whilst also being easy to use and understand. Our range consists of a number of bundles presented as individual boards or on panels (see right). These are multiple E-blocks2 boards presented in a rugged design, suitable to withstand the rigours of educational environments. We also supply a microcontroller system development kit, alongside free curriculum for those studying about microcontroller programming in school, college or university. This kit (below) is available with the upstream programmer board of the users choice.

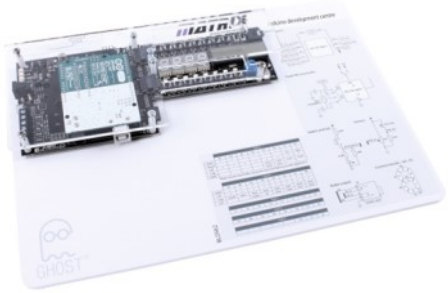

Language Independent

E-blocks2 can be used with various programming languages allowing for flexible learning and understanding of multiple software toolchains without requiring multiple hardware sets including Flowcode, MPLAB and the Arduino IDE.

Schematics and Examples Available

E-blocks schematics are available to allow you to re-create the boards on your own PCB once you have a working system up and running. Examples written in Flowcode and C are also available from our website to speed up your getting started times.

E-blocks 2 boards are designed and manufactured in the UK

A&P INSTRUMENT®
科 藝 儀 器

Connector Pinout

E-blocks 2 connector Layout

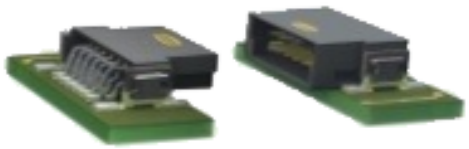

Upstream Connector - Female

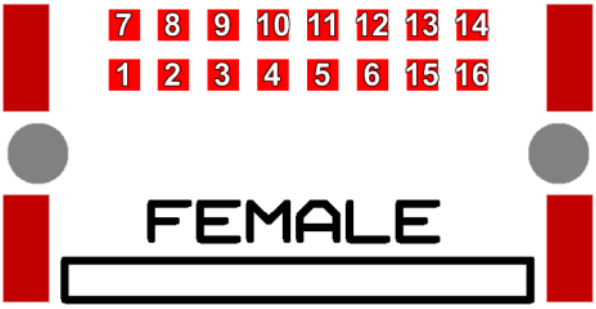

Downstream Connector - Male

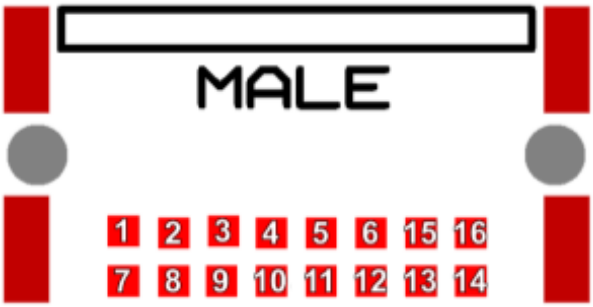

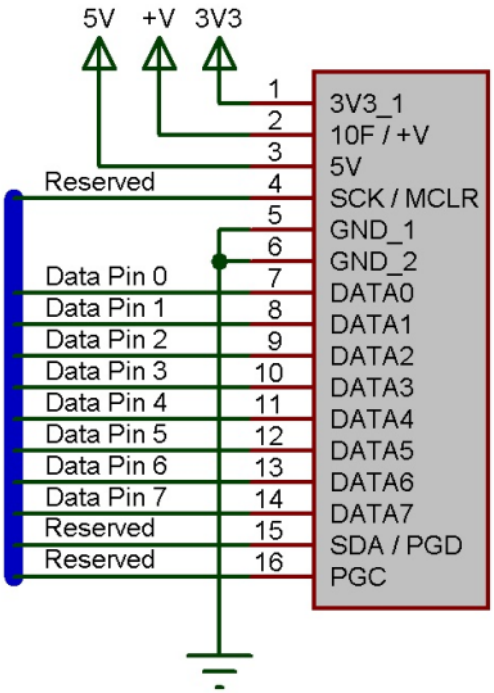

+V represents the I/O voltage of the microcontroller or processor on the upstream board. Depending on the upstream board this is either fixed at 5V or 3V3 or can be set by the user via a switch.

E-blocks 1 connector Layout

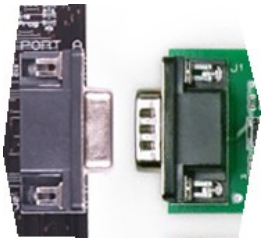

Upstream Connector—Female

Downstream Connector—Male

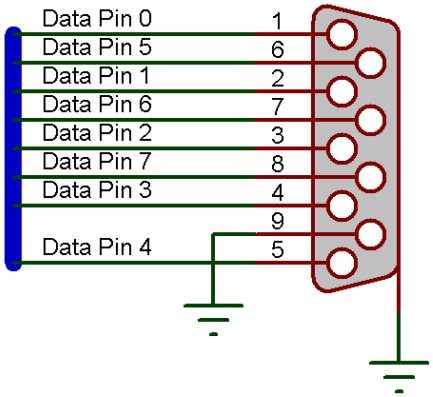

A&P INSTRUMENT®
科 藝 儀 器

New in E-blocks 2

If you're already familiar with the E-blocks systems then here are some of the new features included in E-blocks 2.

Power

Automatic powering via 5V USB or DC Power Supply, no more jumpers to set
Now routed via the connector, no more flying leads

- 3.3V @ 1A
- 5V @ 500mA
- +V Microcontroller VCC Voltage
- Ground

Auto ID

Board Auto ID functionality
Available via the console window (Flowcode 7.3 Onwards)
More Auto ID support coming soon.

Modernised, Miniaturised and Ruggedized

Smaller Footprint using up to date surface mount technology
Standard boards are now 24mm wide
Mounting holes are on a 10mm spaced pitch
Over current resettable fuse protection
Varistor and R/C based EMC and EMF protection

Ghost 2 (Upstream Boards)

Microcontroller Programming
Improved high speed (HS) USB communications
In Circuit Debug (ICD) - In conjunction with Flowcode

- Program Control Start / Pause / Step Into / Step Over / Stop / Restart
- Up to 8 user defined breakpoints

In Circuit Test (ICT)- In conjunction with Flowcode

- Digital Sample rates <= 500KHz
- Analogue Sample rates <= 100KHz
- Enhanced data collection routines

A&P INSTRUMENT®
科 藝 儀 器

Conversion - BL0113 - EB US to EB2 DS

The converter board allows old version 1 E-blocks upstream boards to be compatible with the various E-blocks 2 downstream boards. This is useful if you already have an E-blocks programmer board and want to use this with the new E-blocks 2 peripheral boards. Screw terminals are provided on the board to allow for the various power rails to be supplied to the E-blocks 2 downstream board. Only power rails that are required by the downstream board need to be connected.

BL0113 - Board Schematic

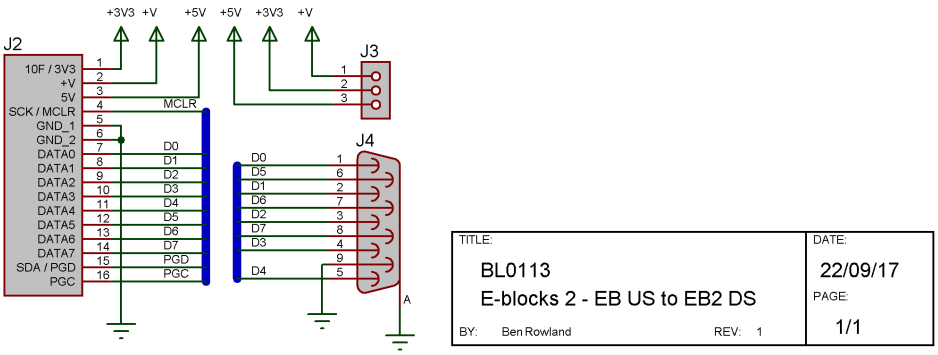

A&P INSTRUMENT®
科 藝 儀 器

Conversion - BL0119 - EB2 US to EB DS

The converter board allows E-blocks 2 upstream boards to be compatible with the various old E-blocks downstream boards. This is useful if you already have E-blocks peripheral boards and want to use this with the new E-blocks 2 upstream boards. Screw terminals are provided on the upstream board to allow for the various power rails to be supplied to the E-blocks downstream board.

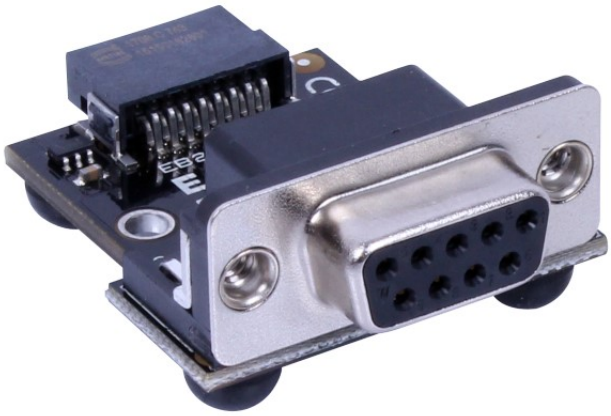

BL0119 - Board Schematic

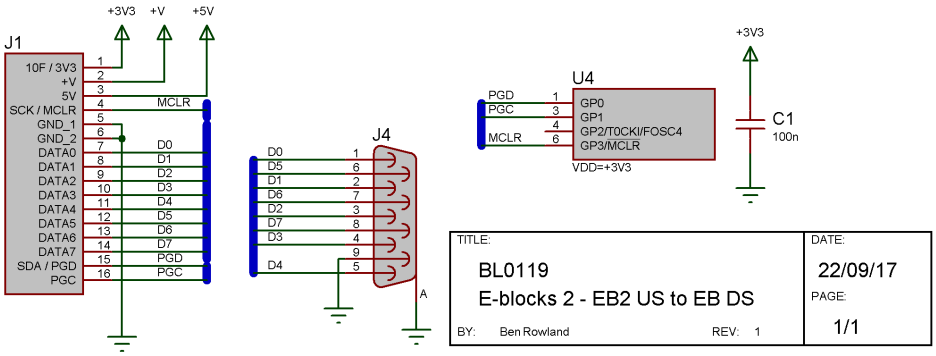

A&P INSTRUMENT®
科 藝 儀 器

Downstream - BL0106 - Click

The Click board provides a simple way of connecting a Click module from MikroElektronika using the Mikrobus connection and layout standard. The Click board therefore allows a wide range of different modules to be compatible with the E-blocks 2 system. Most of the Mikrobus pins are wired to allow for direct peripheral support from the E-blocks upstream controller IC. The exceptions to this are the Interrupt and Analogue pins which are exposed via turned pin sockets allowing you to wire these signals to any of the free pins of your E-blocks controller. Protection is provided on the board to ensure that 5V and 3V3 devices can work together seamlessly without causing any damage.

Port Bit	Function
0	uC RX / Click TX
1	uC TX / Click RX
2	SPI CS
3	SPI MOSI
4	SPI MISO / I2C SDA
5	SPI SCK / I2C SCL
6	PWM
7	Reset

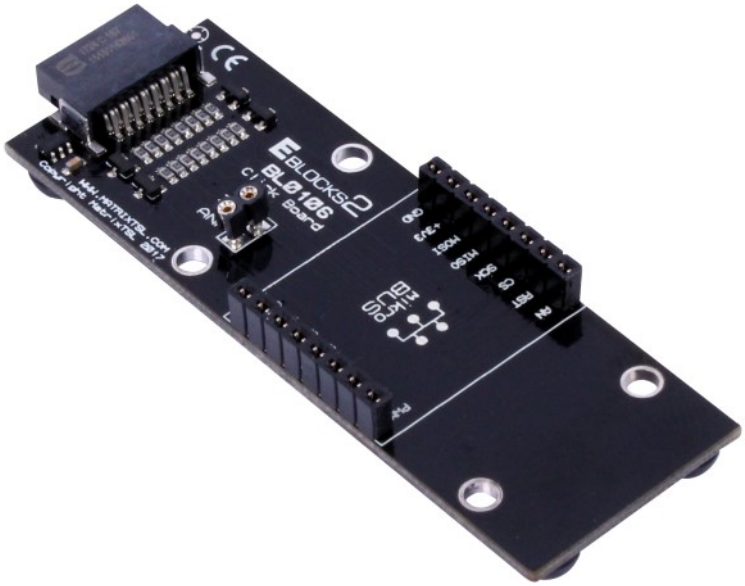

BL0106- Board Schematic

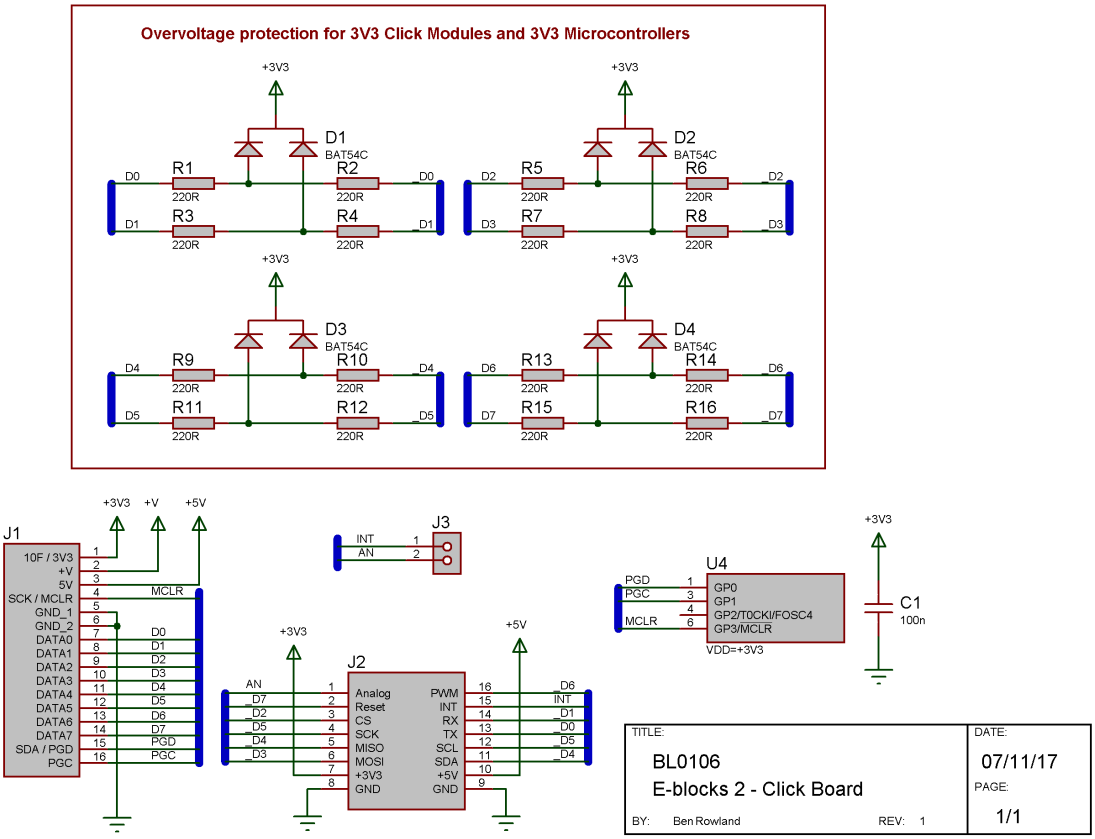

A&P INSTRUMENT®
科 藝 儀 器

Downstream - BL0114 - Combo

This flexible combination board is an ideal platform for learning and project development. The board will work with any upstream E-blocks system allowing multiple technologies to be explored using a single downstream E-blocks board. The board is ideal for using in conjunction with our CD ROM resources to help learn programming using flow charts, C or assembly code. The graphical LCD is driven via an intelligent conversion module to allow it to be treated as a standard Alphanumeric HD44780 compatible device.

Features

- 16 Individual LEDs
- 16 Individual Switches
- Quad 7-Segment Display
- 20 x 4 Character Alphanumeric LCD
- On-board sensors (Light / Potentiometer)
- Audio Output Socket

Refer to the LCD Key Differences section for more info on the LCD including the in-built LCD character set.

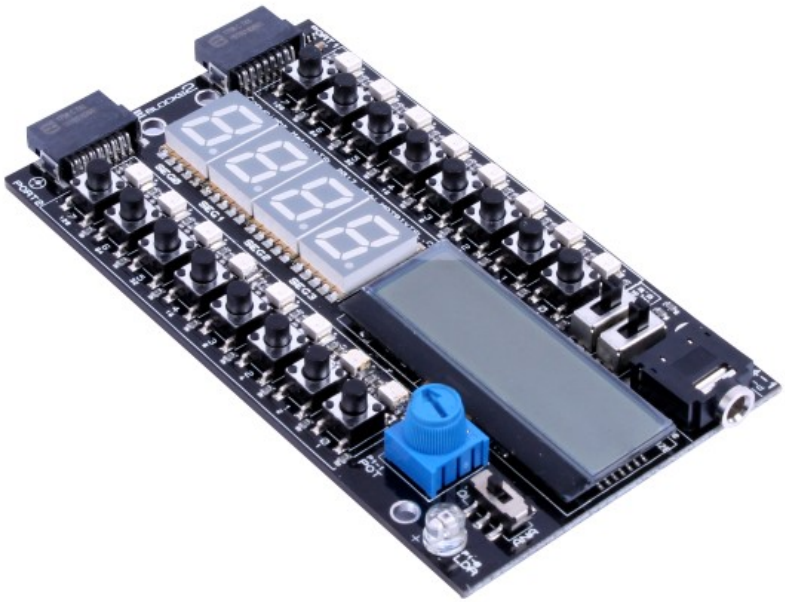

The ANA/DIG switch specifies the connections for pins 0 and 1 on Port 1. In the DIG position the pins will be connected to the digital circuitry including the Switch, LED and 7-Seg Common Pin. In the ANA position the pins will be connected to the light sensor and potentiometer inputs respectively. Connecting an Audio jack to the audio socket disconnects pin 2 and 3 on Port 1 from the digital circuitry (Switch, LED and 7-Seg Common Pin).

Connections

	PORT1								Port2							
	7	6	5	4	3	2	1	0	7	6	5	4	3	2	1	0
7 Seg					Com3	Com2	Com1	Com0	DP	G	F	E	D	C	B	A
LCD											Enable	RS	Data3	Data2	Data1	Data0
Analog							Pot	Light								
Sound					Out R	Out L										

A&P INSTRUMENT®
科 藝 儀 器

Downstream - BL0114 - Combo

Board Layout

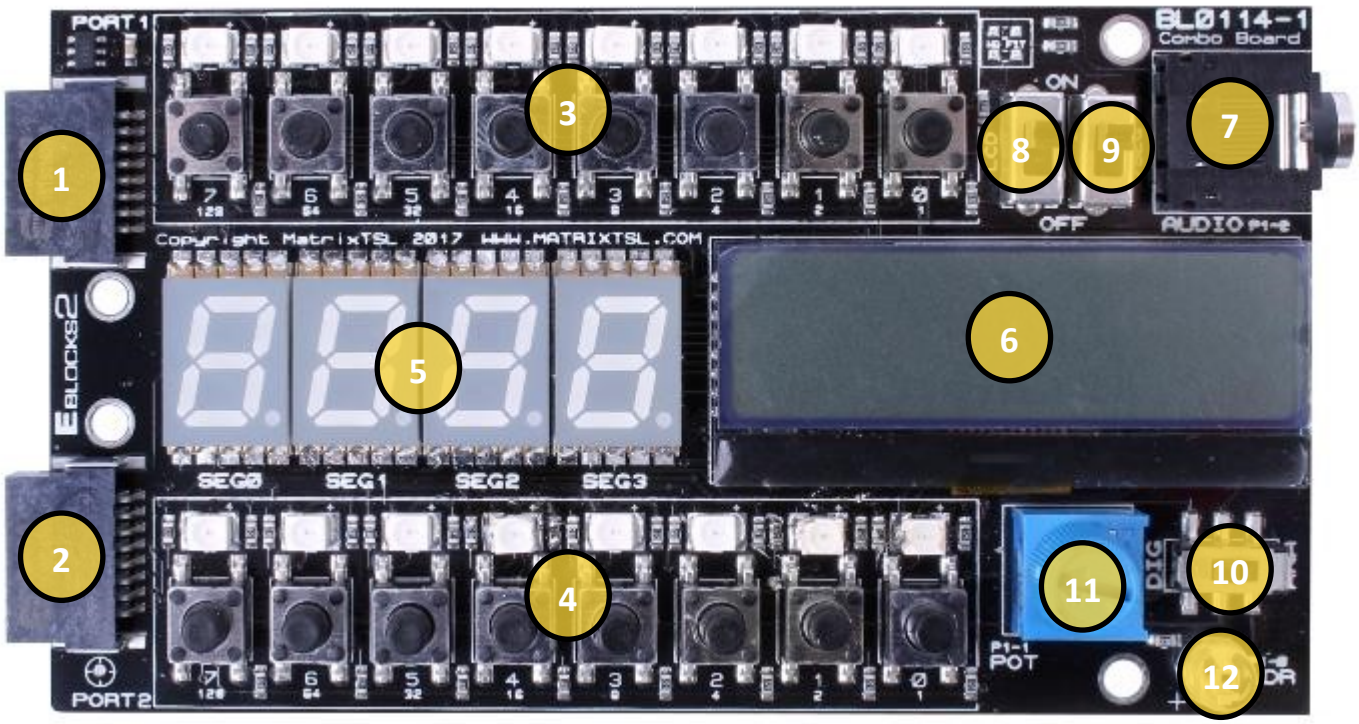

1. Port 1 EB2 Connector
2. Port 2 EB2 Connector
3. Port 1 Switches and LEDs
4. Port 2 Switches and LEDs
5. 7-Segment Display Bank
6. Alphanumeric LCD
7. Audio Output Socket
8. LCD On/Off Switch
9. 7-Segment On/Off Switch
10. Analogue/Digital Switch
11. Analogue Potentiometer
12. Analogue Light Sensor

A&P INSTRUMENT®
科 藝 儀 器

Downstream - BL0114 - Combo

Block Diagram

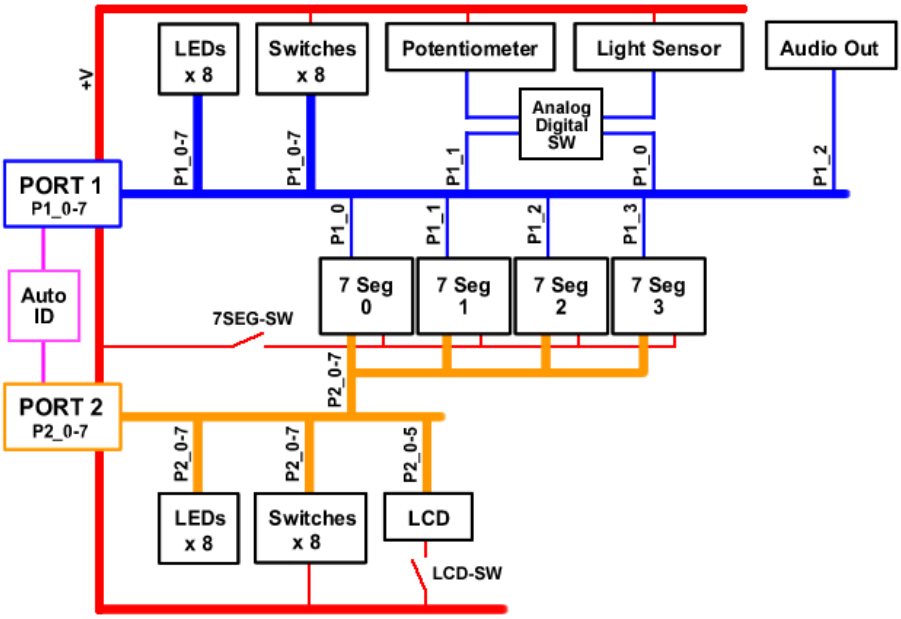

7 Segment Display—Segment Map

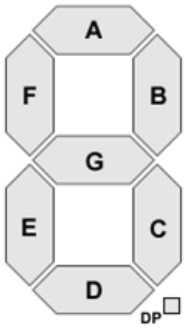

Board Schematic

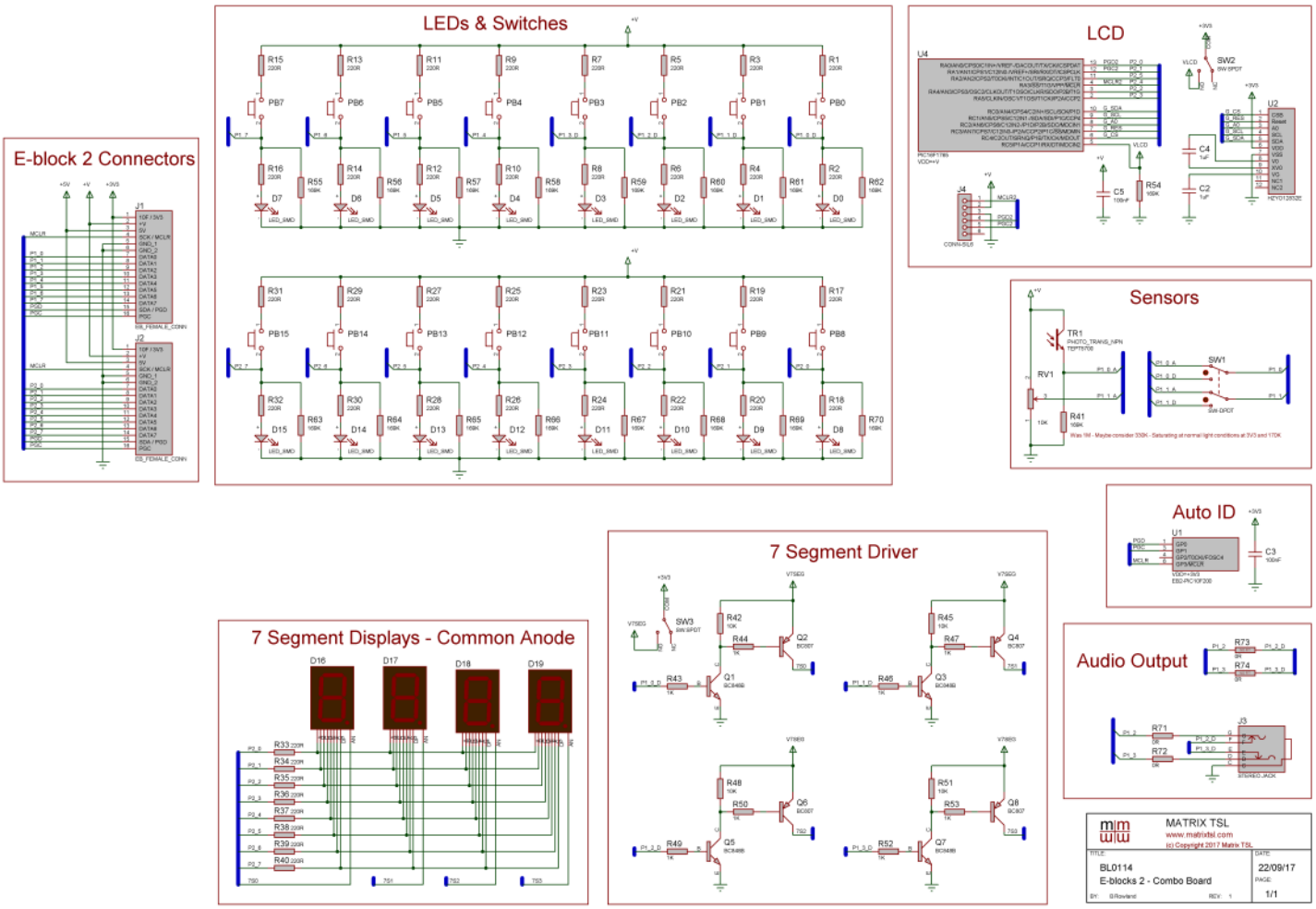

A&P INSTRUMENT®
科 藝 儀 器

Downstream - BL0117 - Prototype

The Proto board allows for easy addition of custom circuitry into the E-blocks 2 system. The board provides an array of standard 2.54mm pitch holes which can be used to permanently solder electronics onto the E-blocks board. The board is also supplied with a small breadboard allowing for temporary electronics to be created and tested with the E-blocks 2 system. The small breadboard features a sticky back so it can be attached to the top of the Proto E-block circuit board if required. The board exposes the eight data lines from the microcontroller port as well as the various power connections +V, 3V3, 5V and GND via turned pin sockets suitable for linking to your circuitry using single core wire.

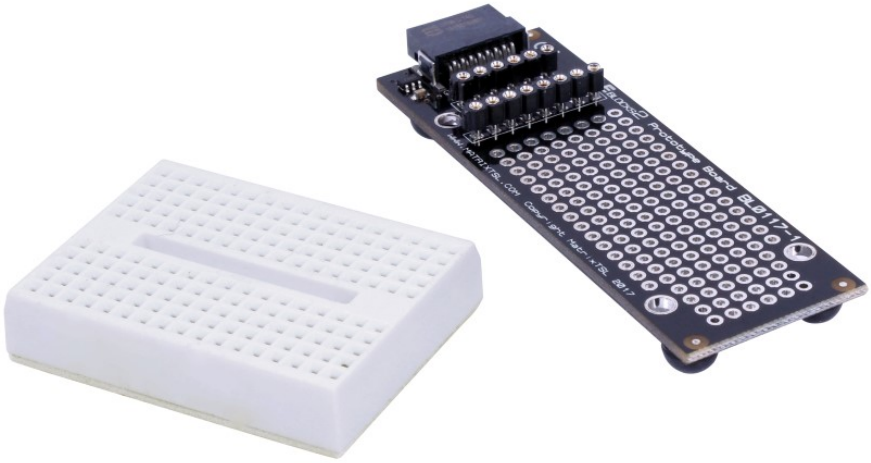

The small breadboard is supplied with the Prototype board and can be fixed to the top of the prototype board if required by using the provided sticky pad on the back of the breadboard. Components can also be soldered directly to the Prototype board as required. The prototype board comes complete with six Dupont style male to male cables allowing you to easily connect the signals from your upstream board to your custom circuitry.

BL0117 - Board Schematic

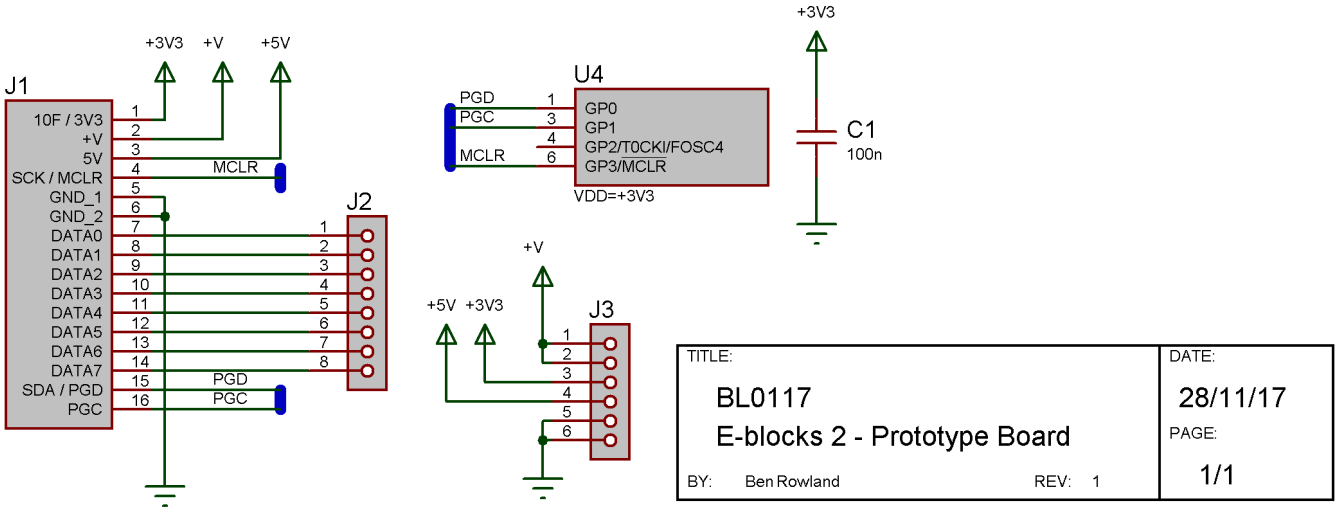

A&P INSTRUMENT®
科 藝 儀 器

Downstream - BL0127 - Actuators

The Actuators board allows for investigation into several different motor types. Included on the board is a DC motor with both analogue and digital feedback, a servo motor and a stepper motor plus the circuitry to drive the motors. The DC motor is driven using a standard H-Bridge driver IC and can be driven using simple digital on/off right through to analogue pulse width modulation (PWM) techniques. By monitoring the feedback signal, a closed loop control system can be made to control the speed of the DC motor. A second H-Bridge driver IC is used to drive the four coils of the stepper motor allowing for full step and half step operation. The Stepper motor features an internal gearbox to provide a high level of torque and precise angle control. The servo motor is a standard R/C servo motor with a supplied actuator arm. The board features a DC socket to allow the various motors to be powered from a secondary 5 - 6V power supply.

Port Bit	Function
0	Servo Motor
1	DC Motor A
2	DC Motor B
3	Stepper A
4	Stepper B
5	Stepper C
6	Stepper D
7	DC Feedback

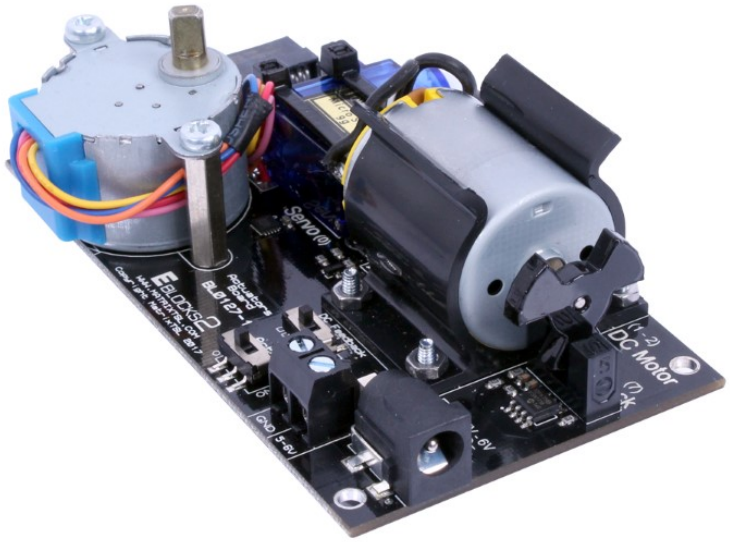

BL0127 - Board Schematic

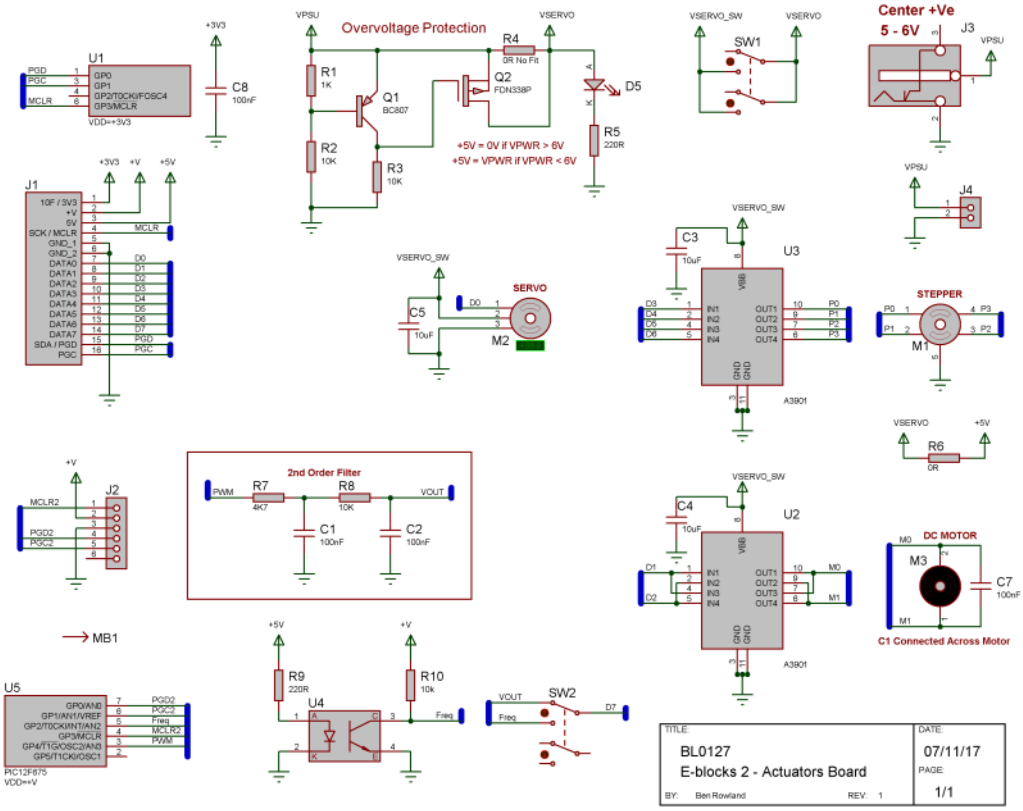

A&P INSTRUMENT®
科 藝 儀 器

Downstream - BL0127 - Actuators

Board Layout

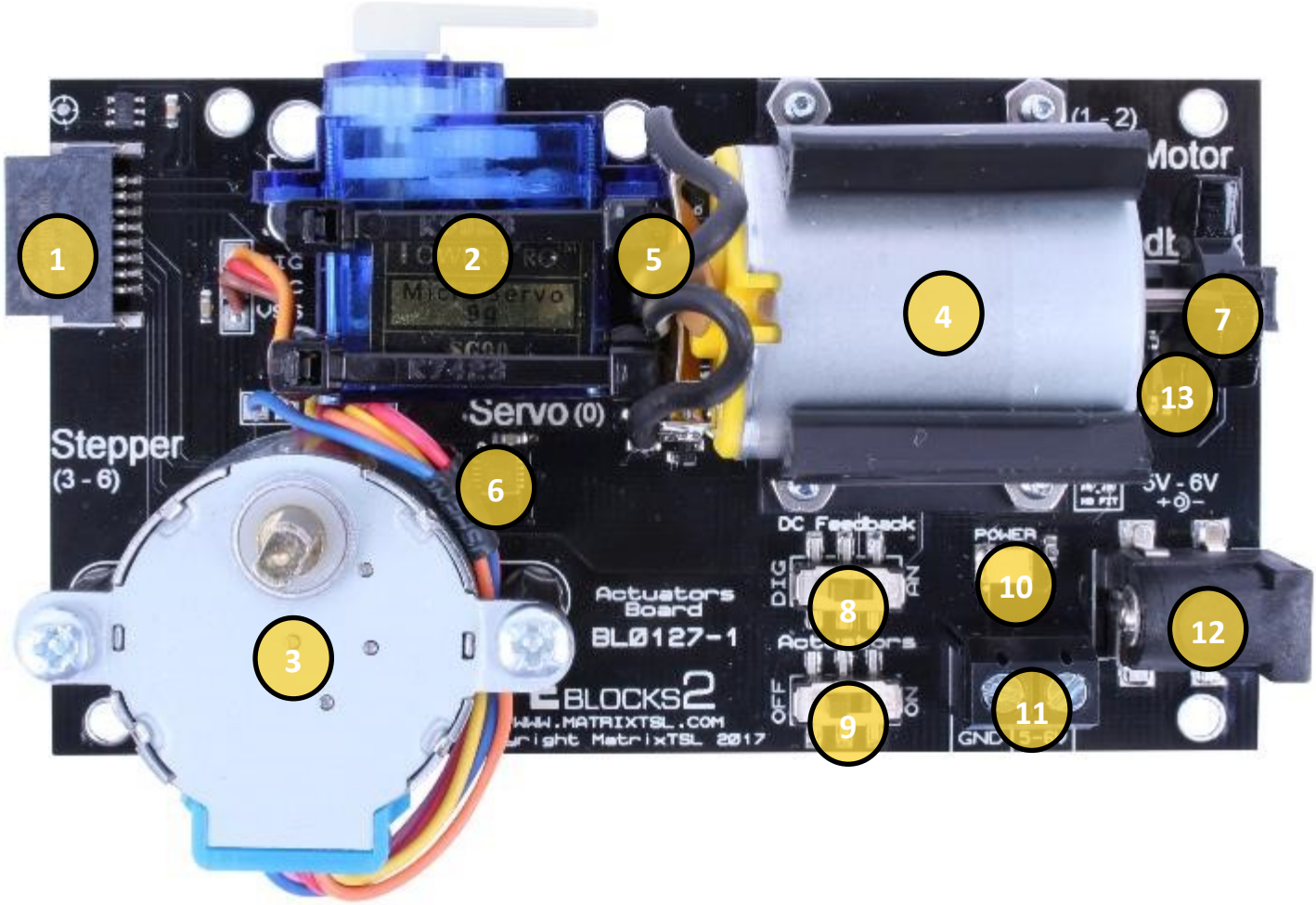

1. Port EB2 Connector
2. Servo Motor
3. Stepper Motor
4. DC Motor
5. DC Motor Driver IC
6. Stepper Motor Driver IC
8. DC Motor Feedback Analogue/Digital Switch
9. Actuators On/Off Switch
10. Power LED
11. Power screw terminals
12. Power DC Socket Inner Positive 5V-6V
13. DC Motor Analogue Speed Measurement IC

The stepper motor has a 64 step revolution count and features an internal 64:1 gearbox which equates to 4096 steps per revolution. For the stepper to work with the Flowcode Stepper motor component the pin connection properties must be setup as follows, replacing PORTB with the correct EB2 port.

Connections	
Coil 1	$PORTB.3
Coil 2	$PORTB.5
Coil 3	$PORTB.4
Coil 4	$PORTB.6

A&P INSTRUMENT®
科 藝 儀 器

Downstream - BL0129 - Grove

The Grove board allows for the easy addition of a large number of peripherals and sensors from the Seeed Studio range of Grove modules. The board can be used with up to four Grove modules at a time. Care should be taken to ensure that the system voltage is compatible with all the connected Grove modules to avoid damaging the Grove module.

Port Bit	Function
0	Socket 1 Even
1	Socket 1 Odd
2	Socket 2 Even
3	Socket 2 Odd
4	Socket 3 Even
5	Socket 3 Odd
6	Socket 4 Even
7	Socket 4 Odd

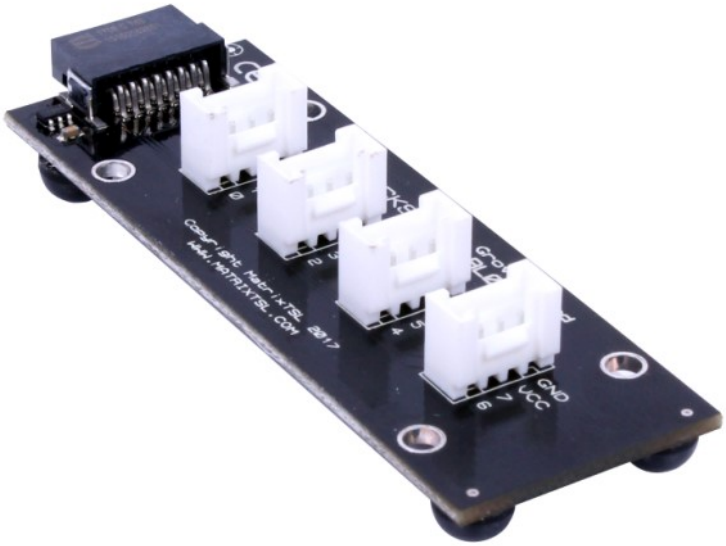

BL0129 - Board Schematic

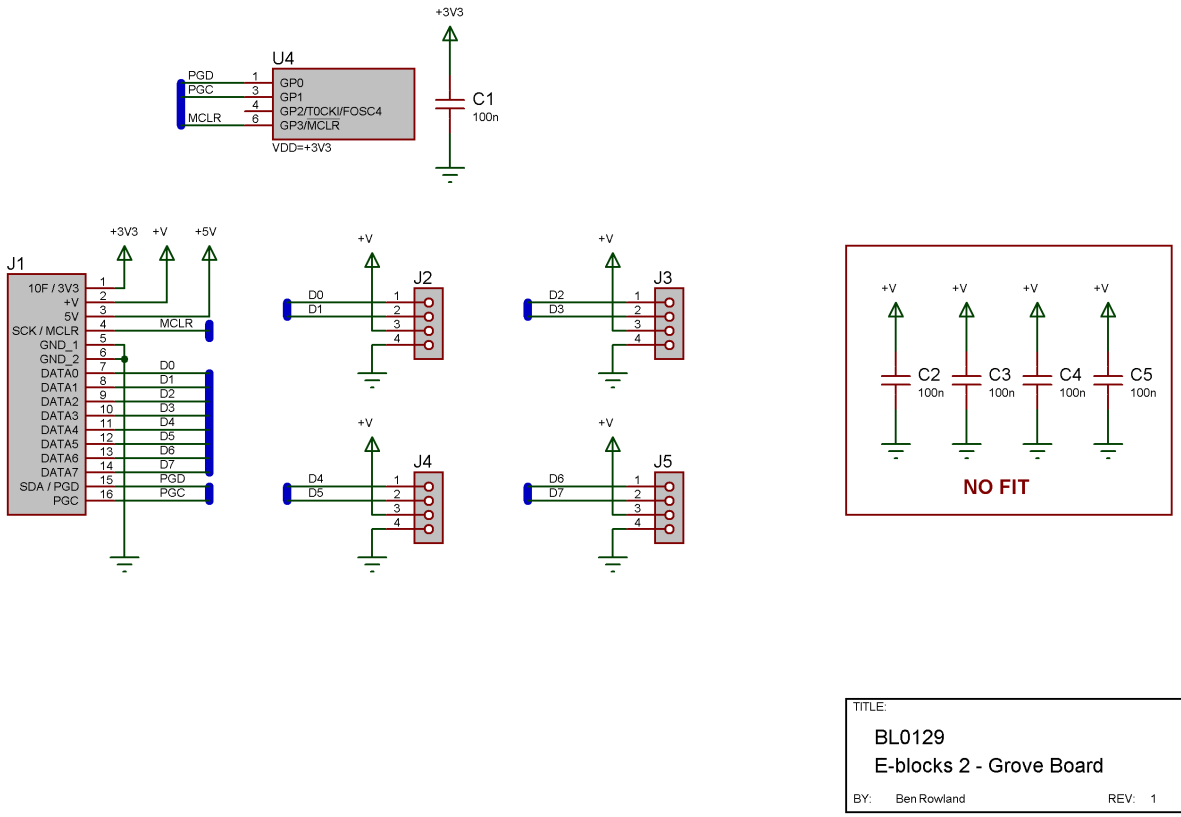

TITLE:	DATE:
BL0129 E-blocks 2 - Grove Board	13/09/17
BY: Ben Rowland REV: 1	PAGE: 1/1

A&P INSTRUMENT®
科 藝 儀 器

Downstream - BL0129 - Grove Sensors

BL0615 - Ultrasonic Ranger

Connection: Single digital i/o pin (on the even pin) ***Voltage:*** 5V

Usage: Trigger with a pulse (at least 10us) on the signal pin, and read the length of the pulse received on the same pin.

Flowcode component: Sensors -> Grove -> Ultrasonic Ranger

Warning: Do not hot plug the Grove-Ultrasonic-Ranger, otherwise it will damage the sensor

BL0644 - Temperature Sensor

Connection: Single analogue output pin (on the even pin) ***Voltage:*** 5V / 3V3

Usage: Read the output signal as an analogue voltage and convert into a temperature.

Flowcode component: Sensors -> Grove -> Temperature Sensor

BL0661 - Infrared Reflective Sensor

Connection: Single digital output pin (on the even pin) ***Voltage:*** 5V / 3V3

Usage: Read the output signal as an digital voltage active low. The detection threshold is set using the onboard potentiometer.

Flowcode component: Sensors -> Grove -> Infrared Reflective Sensor

BL0668 - Temperature & Humidity Sensor

Connection: Single digital i/o pin (on the even pin) ***Voltage:*** 5V / 3V3

Usage: Read the sensor signals by performing a digital one wire communications protocol.

Flowcode component: Sensors -> Grove -> Temp & Humidity DHT22

BL0665 - Water Sensor

Connection: Single analogue output pin (on the even pin) ***Voltage:*** 5V

Usage: Read the output signal as an analogue voltage.

Flowcode component: Sensors -> Grove -> Water Sensor

A&P INSTRUMENT®
科 藝 儀 器

Downstream - BL0129 - Grove Sensors

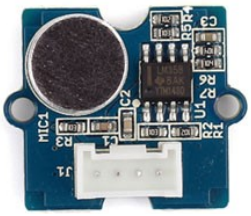

BL0679 - Sound Sensor

Connection: Single analogue output pin (on the even pin) ***Voltage:*** 5V

Usage: Read the output signal as an analogue voltage.

Flowcode component: Sensors -> Grove -> Sound Sensor

BL0691 - 6-Axis Accelerometer & Gyroscope

Connection: I²C Interface (SDA on the odd pin, SCL on the even pin) ***Voltage:*** 5V / 3V3

Usage: Read the sensor signals by performing a digital I²C communications protocol.

Flowcode component: Sensors -> Grove -> 6-Axis Accel & Gyro LSM6DS3

BL0663 - PIR Motion Sensor

Connection: Single digital output pin (on the even pin) ***Voltage:*** 5V / 3V3

Usage: Read the output signal as an digital voltage active high.

Flowcode component: Sensors -> Grove -> PIR Motion BISS0001

BL0659 - I2C Color Sensor V2

Connection: I²C Interface (SDA on the odd pin, SCL on the even pin) ***Voltage:*** 5V / 3V3

Usage: Read the sensor signals by performing a digital I²C communications protocol.

Flowcode component: Sensors -> Grove -> I2C Color Sensor

BL0640 - Barometer Sensor (BMP280)

Connection: I²C Interface (SDA on the odd pin, SCL on the even pin) ***Voltage:*** 5V / 3V3

Usage: Read the sensor signals by performing a digital I²C communications protocol.

Flowcode component: Sensors -> Grove -> Barometer BMP280

A&P INSTRUMENT®
科 藝 儀 器

Downstream - BL0131 - GSM

The GSM board allows the E-blocks system to connect and communicate with a mobile phone (GSM) network. It can be used to make and receive phone calls, send and receive text messages as well as go onto the internet using GPRS for IoT style applications. The board features audio sockets to allow the board to be connected to a standard headset and microphone. A micro SIM socket is hidden away under the GSM module and a quad band antenna is included.

Port Bit	Function
0	uC RX / GSM TX
1	uC TX / GSM RX
2	Reset
3	Ring
4	
5	
6	
7	

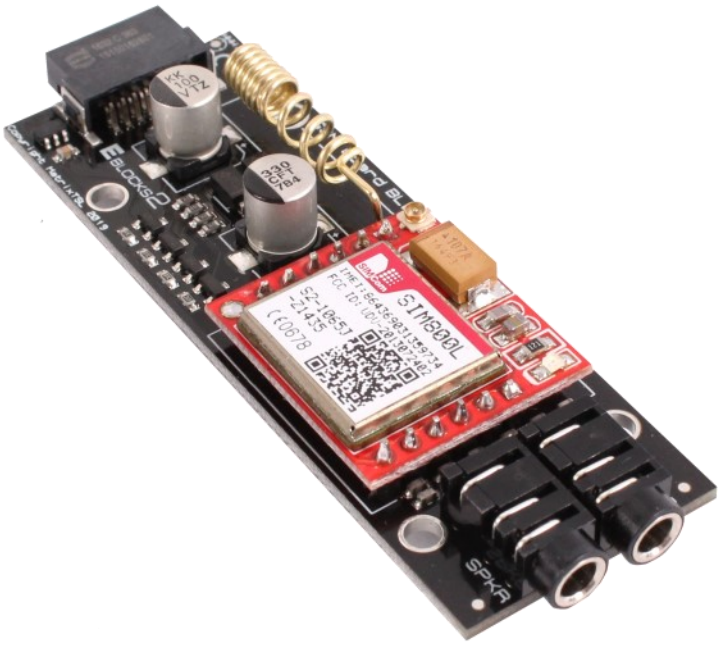

BL0131 - Board Schematic

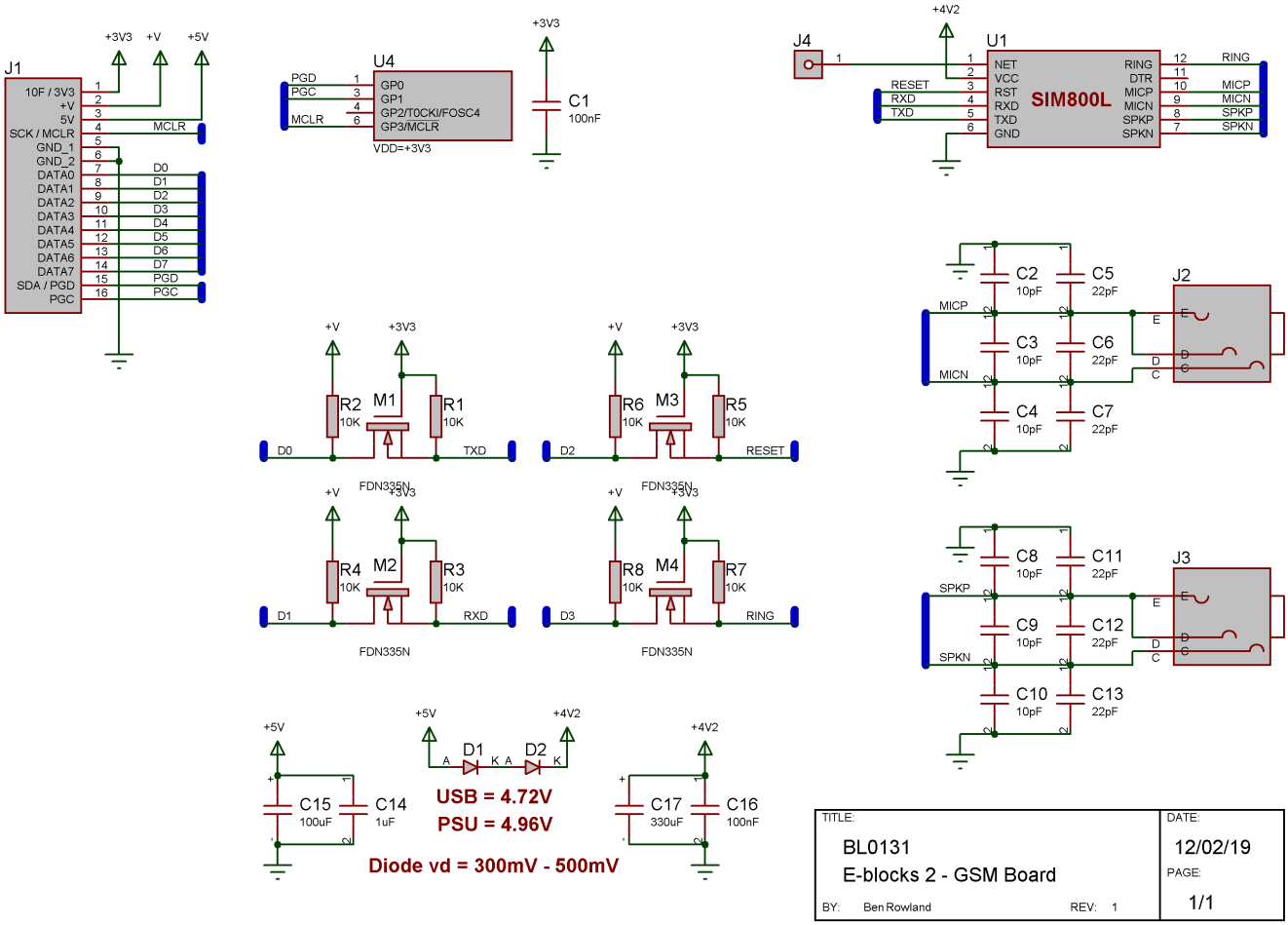

A&P INSTRUMENT®
科 藝 儀 器

Downstream - BL0136 - WIFI

The WIFI board allows the E-blocks system to connect and communicate with an existing WIFI network. It can also be used to create a data access point that other WIFI enabled devices can connect to. WIFI is provided via the popular ESP12F module which is fully certified and ruggedized. The on-board TCP/IP stack allows for easy communications without the need for a software TCP/IP stack running on the E-blocks upstream board. Applications include serving HTML webpages, cloud based statistic logging and internet of things (IOT).

Port Bit	Function
0	uC RX / WIFI TX
1	uC TX / WIFI RX
2	Reset
3	
4	
5	
6	
7	

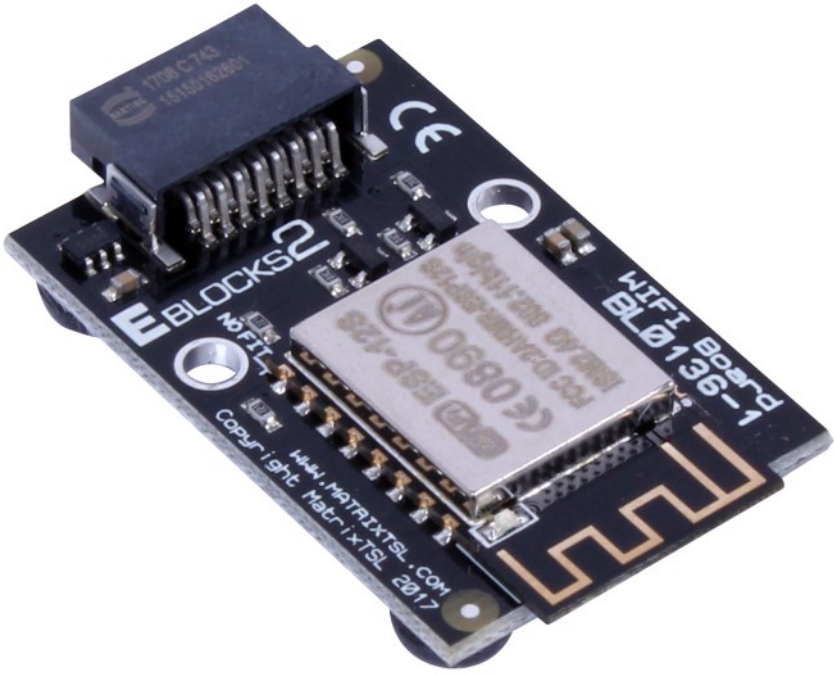

BL0136 - Board Schematic

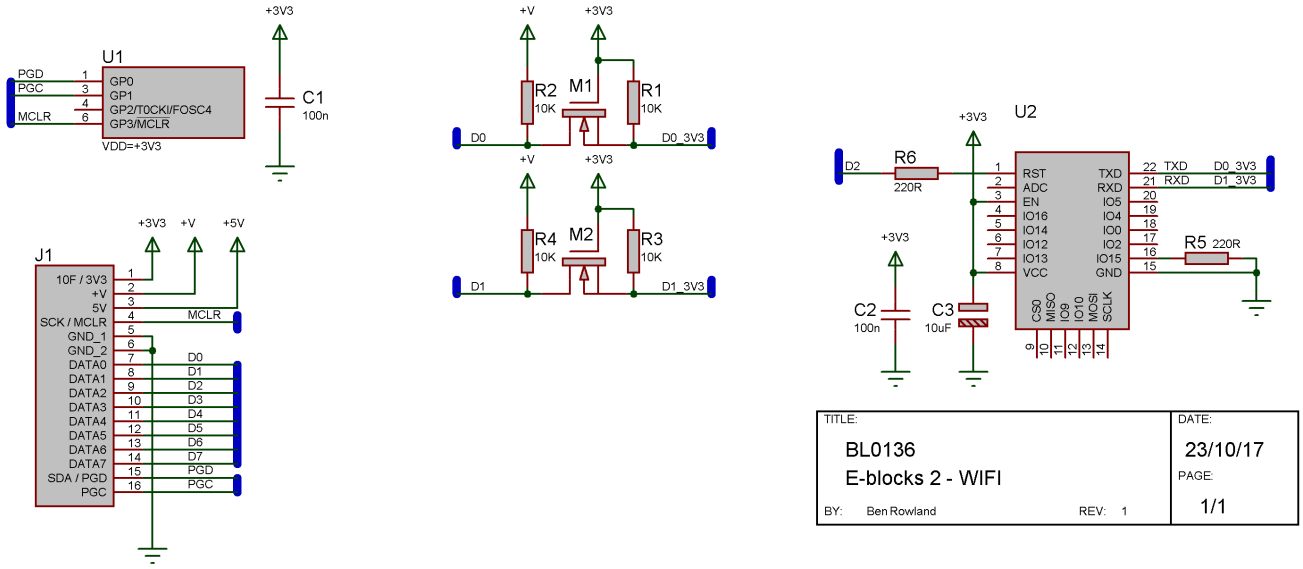

A&P INSTRUMENT®
科 藝 儀 器

Downstream - BL0138 - Keypad 3x4

The Keypad board allows for simple data entry using an array of switch inputs which can be added to the E-blocks 2 system. Keypads are useful tools as they allow you to enter numeric and textual data into the embedded system. The switches are all push to make type and read by controlling the logic level of the columns and reading back the state of the rows. Only a single active switch on the keypad can be read at once.

Port Bit	Function
0	Column 1
1	Column 2
2	Column 3
3	
4	Row A
5	Row B
6	Row C
7	Row D

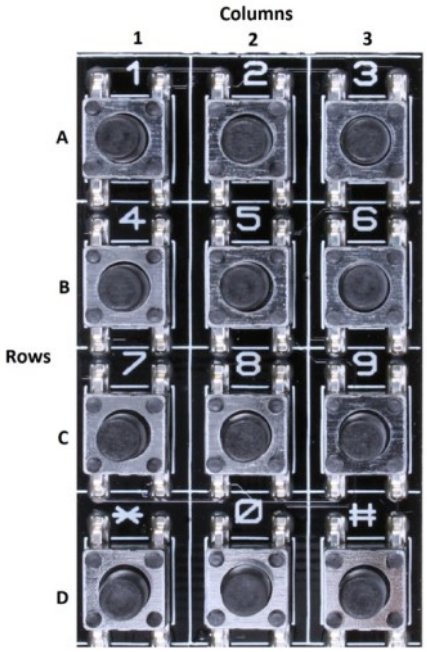

BL0138 - Board Schematic

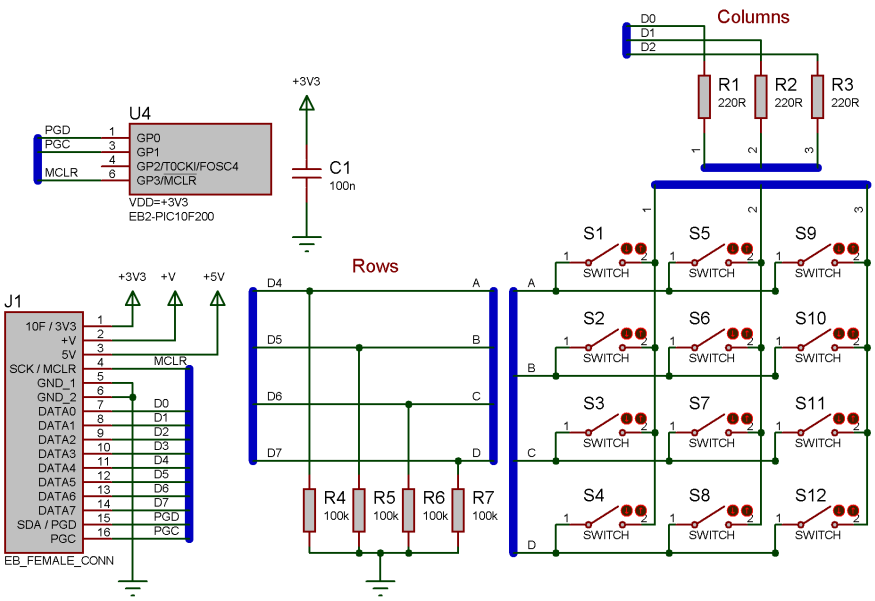

MATRIX TSL
www.matrixtsl.com
(c) Copyright 2017 Matrix TSL

TITLE:	DATE:
BL0138 E-Blocks 2 Keypad Board	20/06/18 PAGE: 1/1
BY: Ben Rowland REV: 1.0	

A&P INSTRUMENT®
科 藝 儀 器

Downstream - BL0139 - Mono Graphical LCD

The Mono Graphical LCD board provides a 32 x 128 pixel monochrome graphical display capable of drawing text, displaying images and symbols. The board could also be made to create some simple games or animations. The board features a ST7567 display driver IC and the display can be driven and fully simulated within the Flowcode software.

Port Bit	Function
0	
1	
2	
3	CS
4	Reset
5	A0
6	SDA
7	SCL

BL0139 - Board Schematic

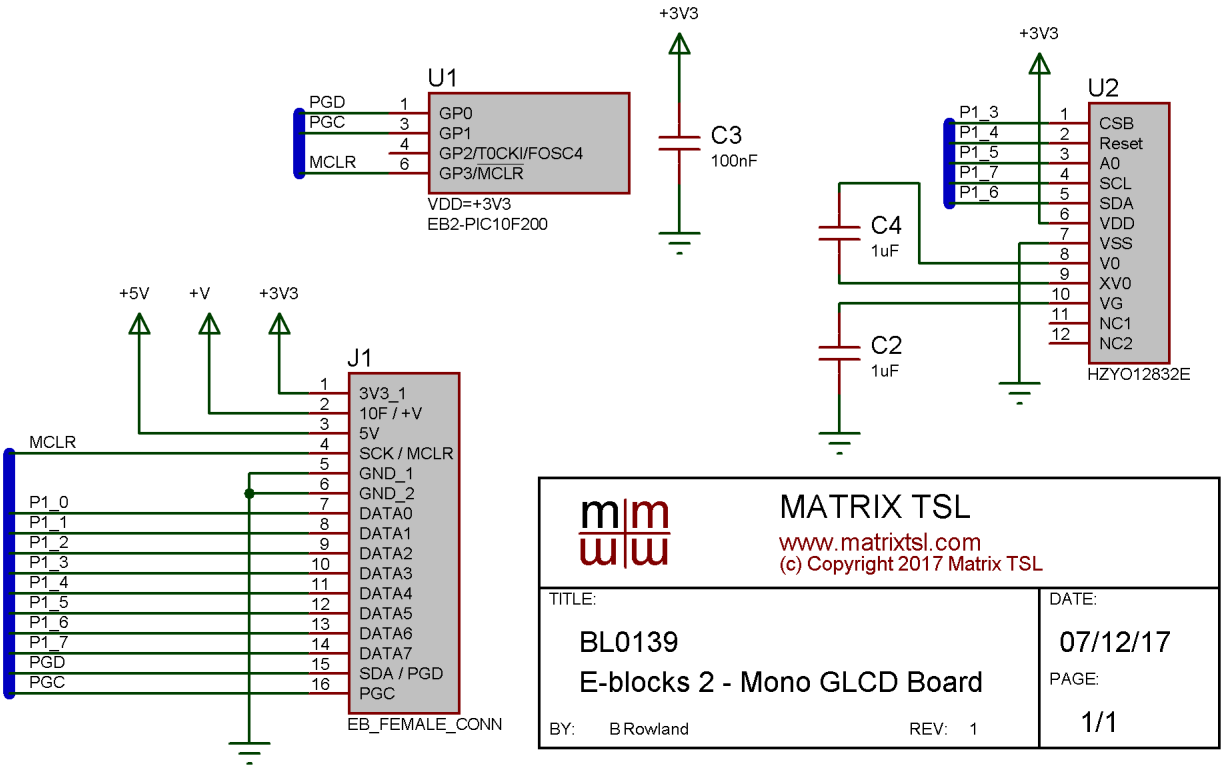

A&P INSTRUMENT®
科 藝 儀 器

Downstream - BL0140 - CAN Bus

The CAN bus board allows the E-block system controller to connect with other controllers. CAN is widely used in automotive applications due to its low cost, high data throughput and noise immunity. The board can be used with upstream E-blocks boards both with or without CAN bus peripherals allowing the maximum flexibility. The board includes both a CAN transceiver and a CAN controller which can be accessed via a simple SPI bus. For development and training purposes the board is fitted with three switches and two LEDs which can be controlled using the CAN transceiver chip. Flowcode macros for this E-block are available.

Port Bit	Internal (INT)	External (EXT)
0		INT
1		
2	TXD	CS
3	RXD	MOSI
4		MISO
5		SCK
6		
7		

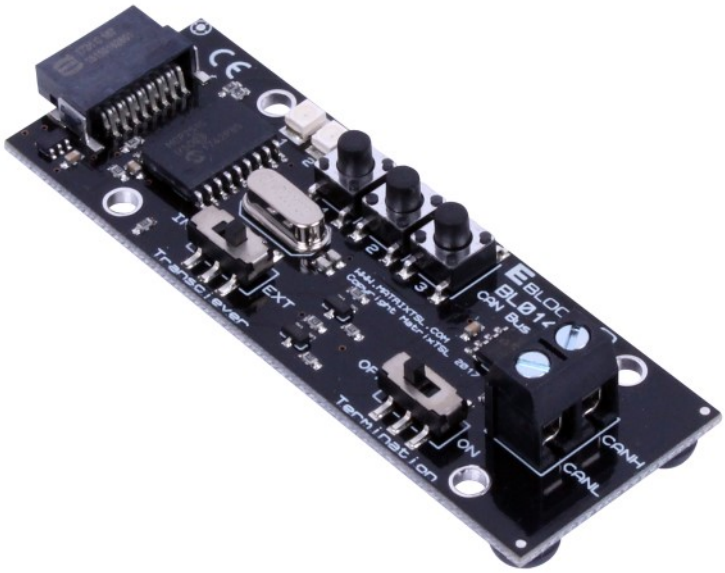

BL0140 - Board Schematic

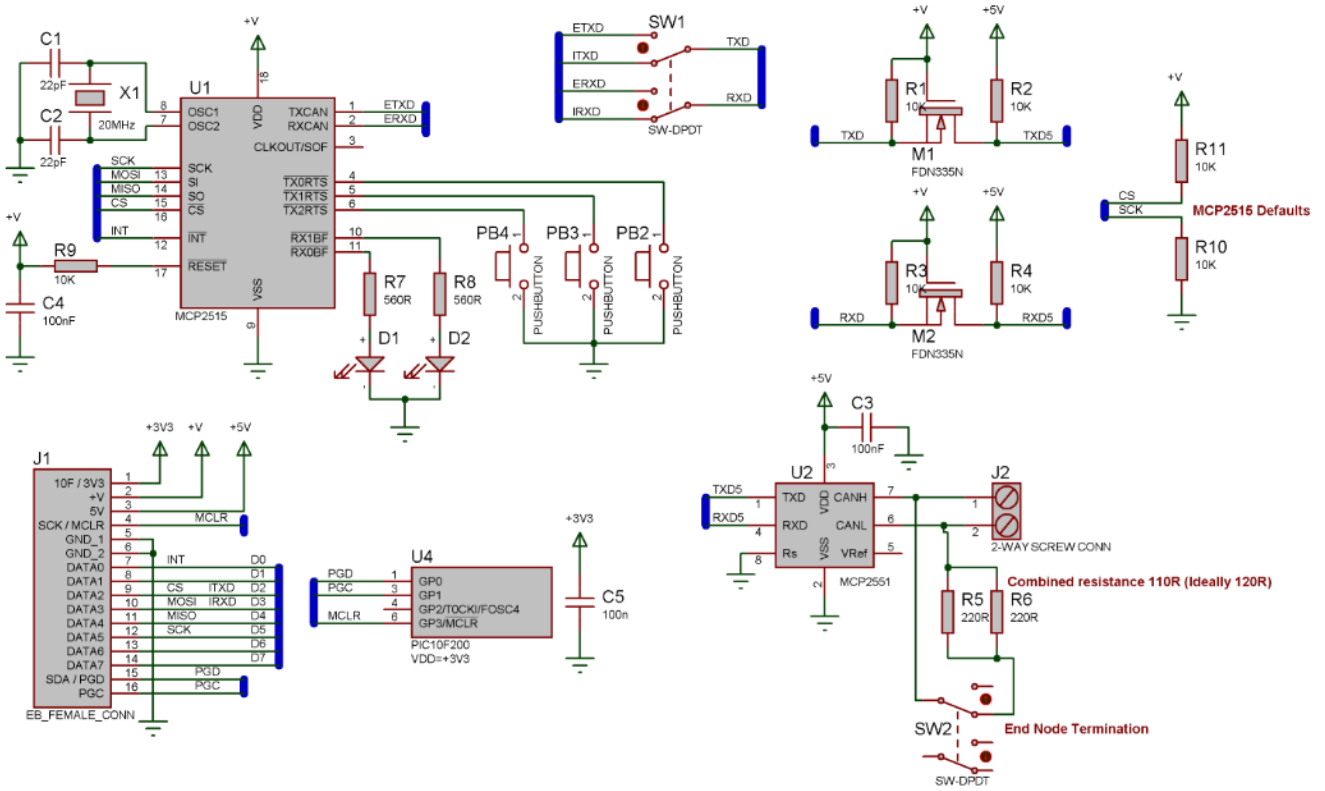

A&P INSTRUMENT®
科 藝 儀 器

Downstream - BL0145 - Switch x 8

The Switch board allows a bank of eight switch inputs to be added to the E-blocks 2 system. Switches are useful tools as they allow you to control what is happening in the system. The switches are all push to make type and active high meaning the voltage to the microcontroller port pins is low when the switch is not pressed and high when the switch is pressed.

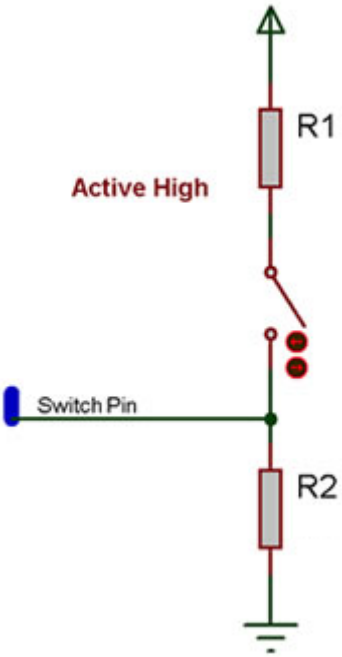

Each switch is in the active high configuration. When the switch is pressed R1 pulls the signal to the E-block port pin high. When the switch is not pressed R2 pulls the signal to the E-block port pin low to avoid picking up electrical noise from the environment (floating).

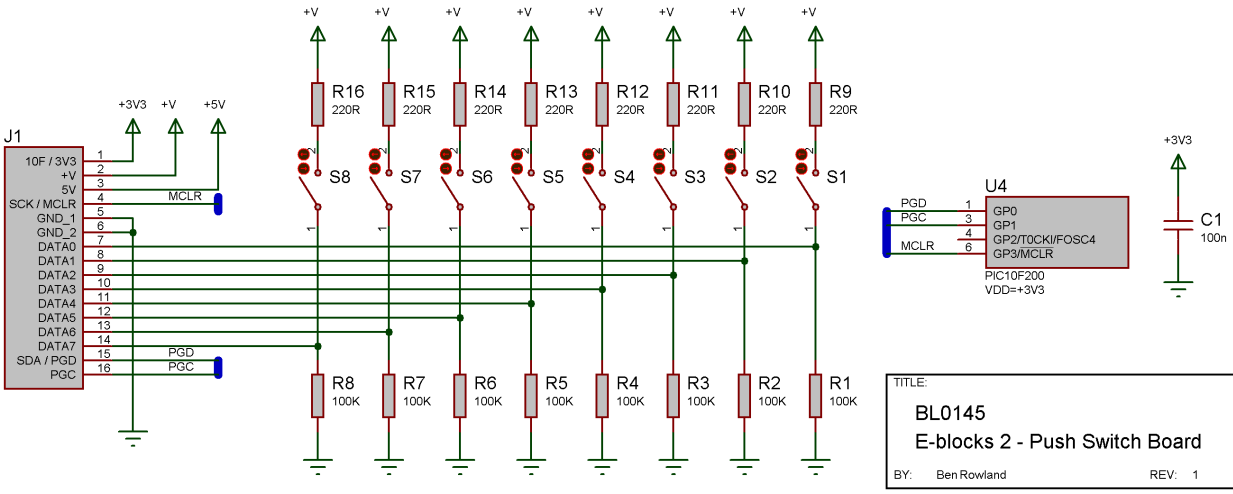

A&P INSTRUMENT®
科 藝 儀 器

Downstream - BL0152 - Zigbee

The Zigbee board uses a Series 2 XBEE module to allow you to connect one of more E-blocks systems together using the Zigbee (wireless area network) standard or to connect your system to a third party Zigbee system. The modules used are compliant with the 2007 Zigbee Pro standard. Because of the nature of the Zigbee standard there are two different boards the BL0152R is pre-programmed to behave as a router node in a Zigbee system. The BL0152C is pre-programmed to behave as a co-ordinator node in a Zigbee system.

Port Bit	Function
0	uC RX / XBEE TX
1	uC TX / XBEE RX
2	Sleep
3	RTS
4	CTS
5	
6	
7	

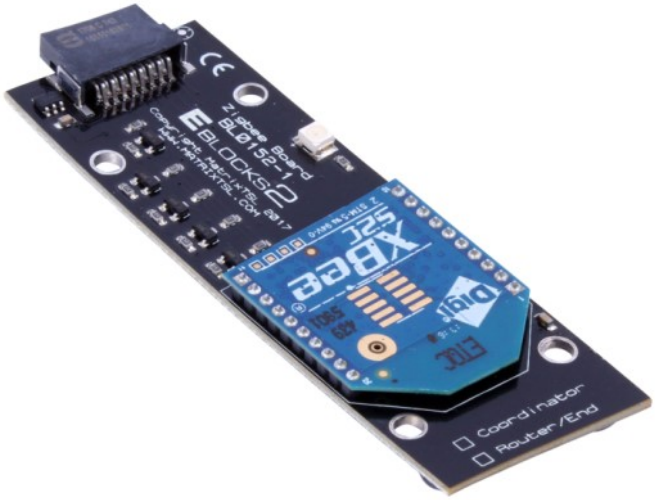

BL0145 - Board Schematic

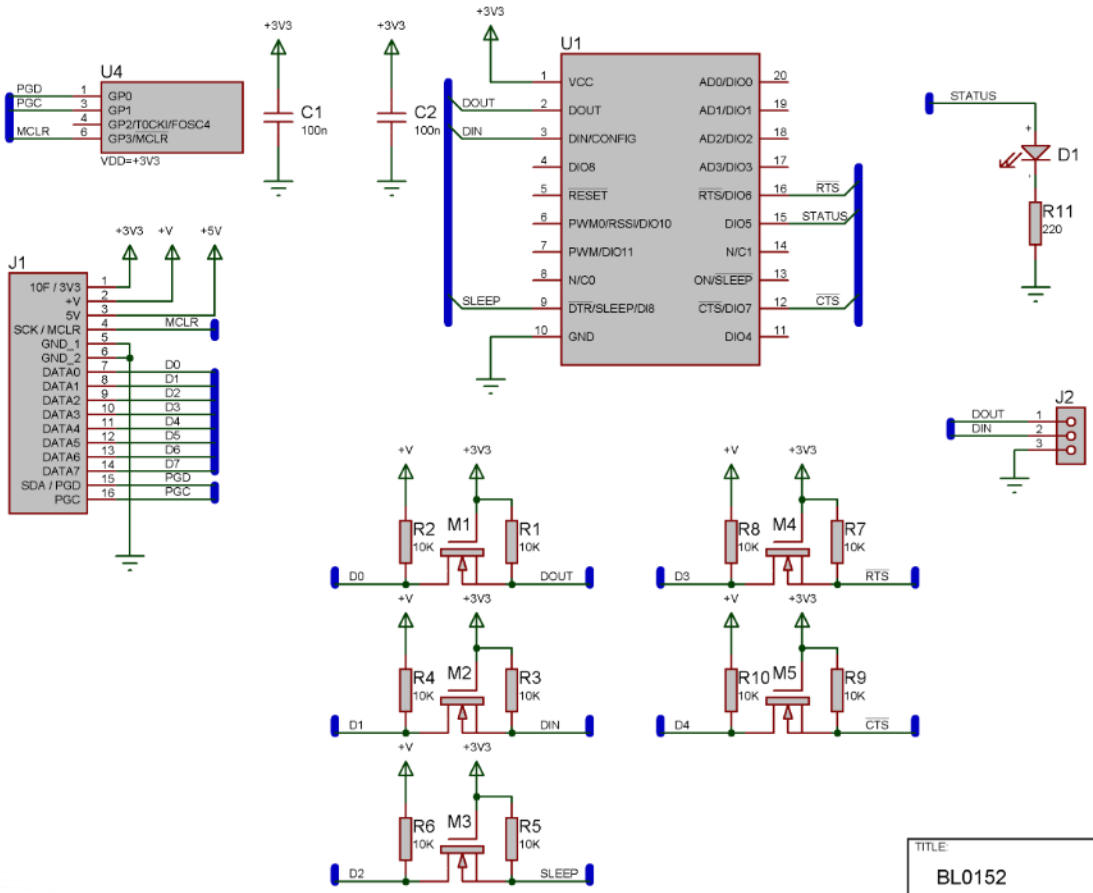

TITLE:	DATE:
BL0152 E-blocks 2 - XBEE Board	18/10/17
BY: Ben Rowland REV: 1	PAGE: 1/1

A&P INSTRUMENT®
科 藝 儀 器

Downstream - BL0154 - Micro SD Card

The micro SD card board allows a large amount of data storage to be added to the E-blocks system. The board provides a means of reading and writing data to the SD card as well as providing level shifting to allow 5V and 3V3 systems to be compatible. The board also provides a means of detecting if the card is present via a switch built into the card socket. The micro SD card is inserted by pushing it into the socket with the SD contacts pointing down. The SD card is removed from the socket by first pushing it inwards to unlock it from the socket before pulling it back out.

Port Bit	SPI Mode
0	
1	
2	CS
3	MOSI
4	MISO
5	CLK
6	SW
7	

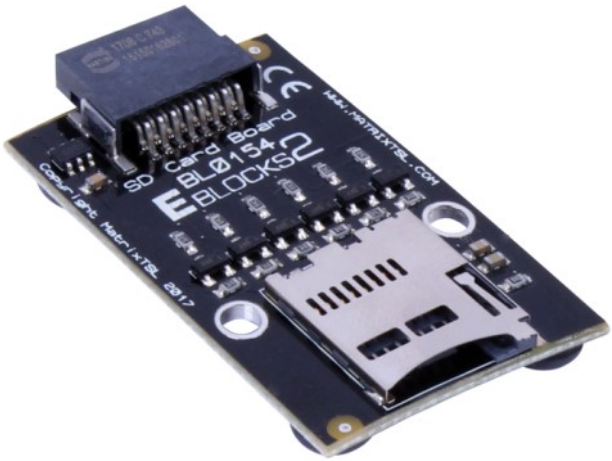

BL0154 - Board Schematic

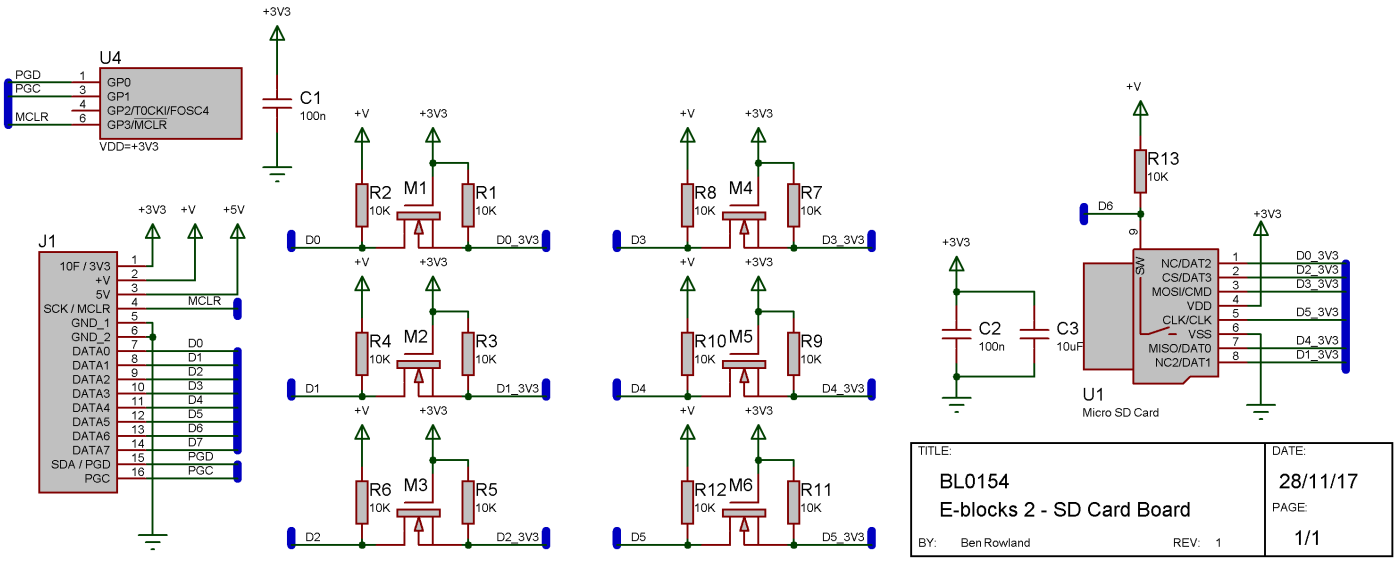

A&P INSTRUMENT®
科 藝 儀 器

Downstream - BL0155 - Expander

The expander board allows multiple E-blocks 2 boards to be connected to a single upstream E-blocks 2 port. The data pins are controlled using an MCP23S17 I/O expander IC via an SPI connection to the host controller. The I/O expander provides digital input and output functionality as well as more advanced features such as interrupt on change. The board also features three DIP switches which are used to set the address of the I/O expander allowing for up to 8 expander boards to exist on the same SPI connections. The auto ID functionality is forwarded onto the connected boards. Please note that only one board should be connected to ports labelled 1 and ports labelled 2 to allow the expansion pins to be unique and auto ID to function correctly.

Port Bit	Function
0	
1	Reset
2	CS
3	SCK
4	MISO
5	MOSI
6	
7	

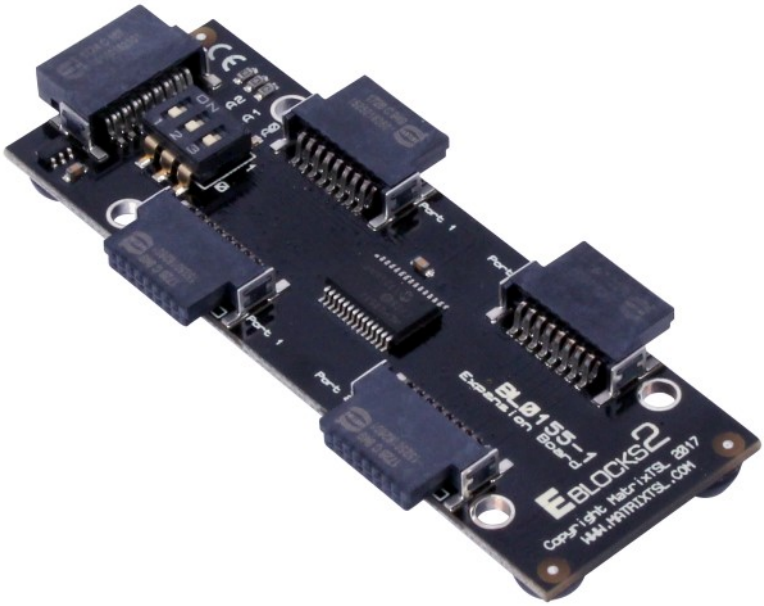

BL0155 - Board Schematic

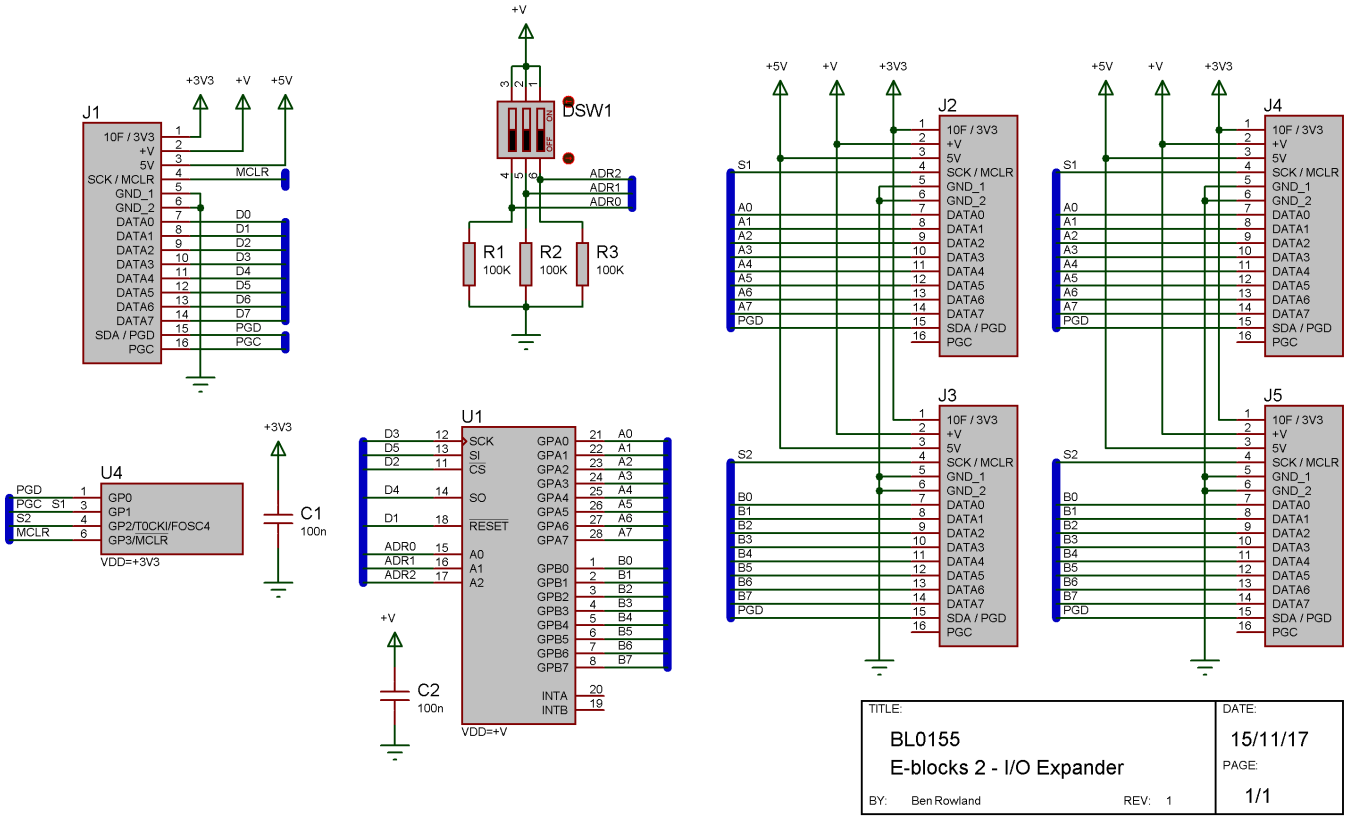

A&P INSTRUMENT®
科 藝 儀 器

Downstream - BL0156 - Splitter

The splitter board allows multiple E-block 2 boards to be connected to a single upstream E-blocks 2 port. The data pins are shared between the connected boards and the auto ID functionality is forwarded onto the connected boards. Please note that only one board should be connected to ports 1 and 2 to allow the auto ID to function correctly.

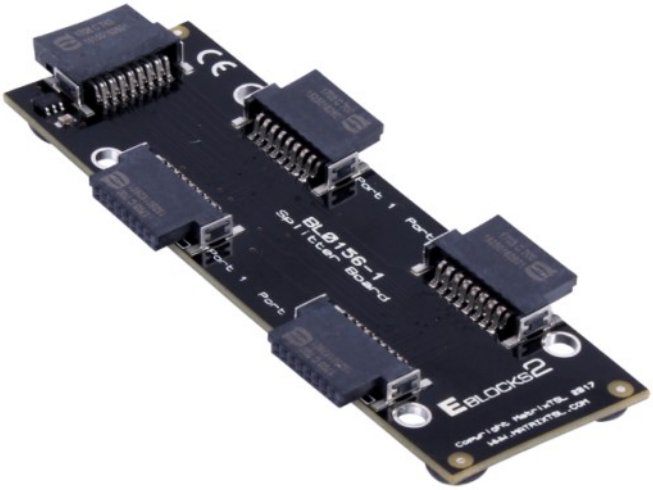

BL0156 - Board Schematic

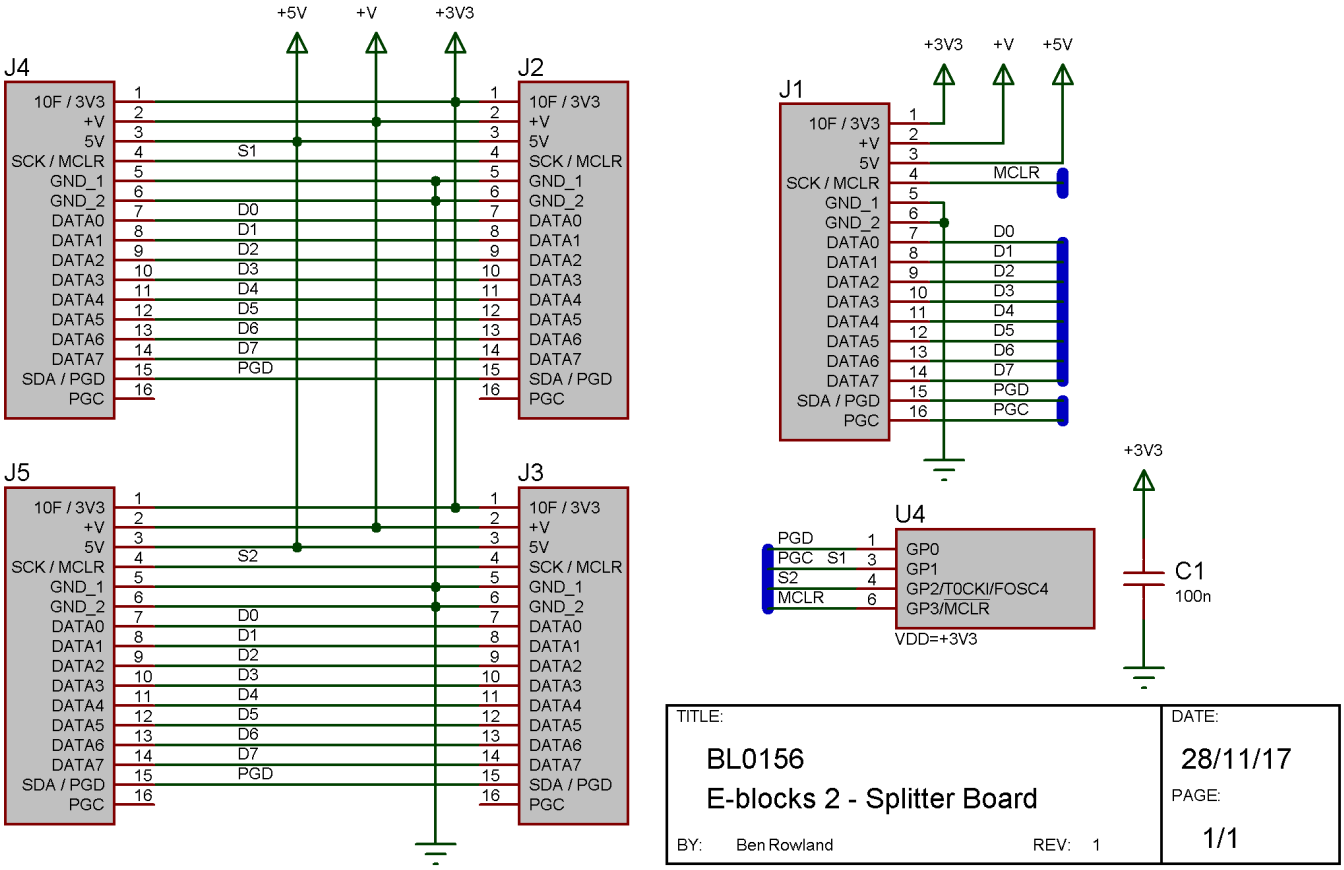

A&P INSTRUMENT®
科 藝 儀 器

Downstream - BL0157 - Colour GLCD Board

The Colour Graphical LCD board provides a 160 x 128 pixel TFT colour graphical display capable of drawing text, displaying images and symbols in 16-bit colour. The board could also be used to create some simple game or animation graphics. Featuring a Flowcode compatible ILI9163C display driver IC the display can be programmed and fully simulated within the Flowcode environment. The board also features a dimmable backlight to provide maximum display visibility even in the dark. The backlight will default to on when the backlight pin is left floating or driven high. The backlight brightness can be controlled by using PWM techniques on the backlight control pin.

Port Bit	Function
0	Data
1	Clock
2	CS
3	A0
4	Reset
5	Backlight
6	
7	

BL0157 - Board Schematic

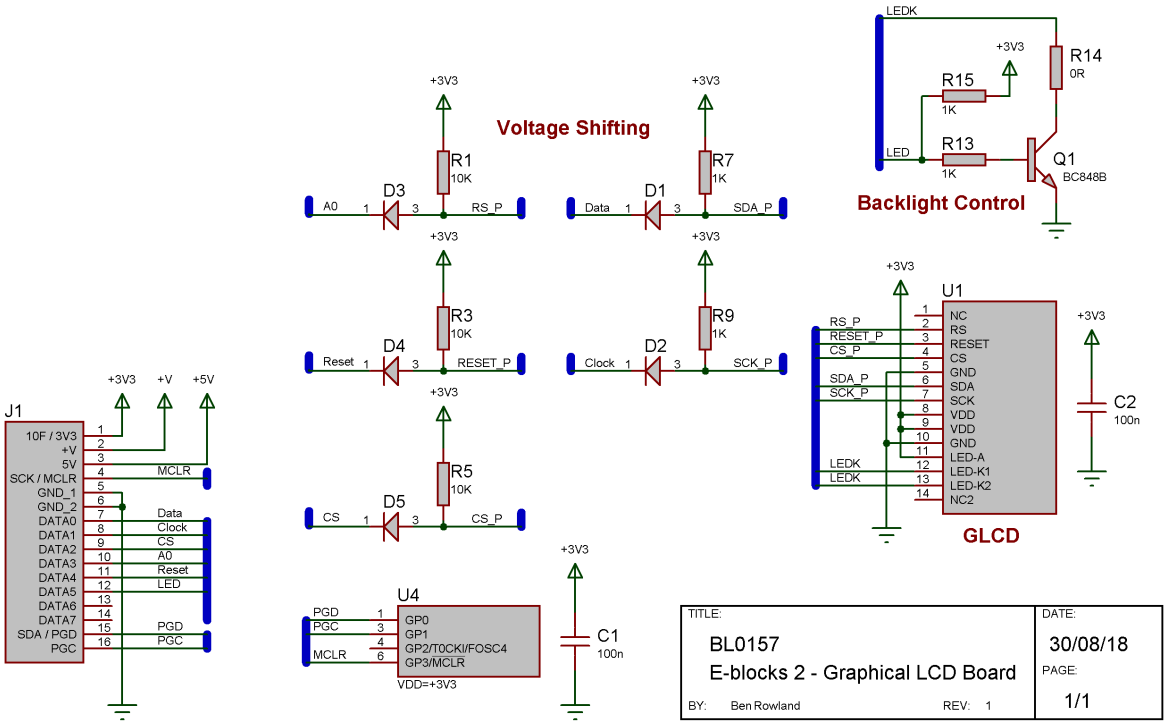

A&P INSTRUMENT®
科 藝 儀 器

Downstream - BL0158 - Upstream Connector

The upstream connector board allows one upstream E-block board to be connected directly to another to allow for things like chip to chip communications to be explored and implemented. Chip to chip communications might include busses such as I2C, SPI or UART peripherals. The Upstream connector board features an IDC compatible header allowing for ribbon cables to be used to connect the boards together using simple push fit connections. The board also features a patch section allowing data pins to be re-wired through to other data pins. For example when connecting a UART to a UART the TX pin from one up-stream board connects to the RX pin of the other upstream board and visa versa.

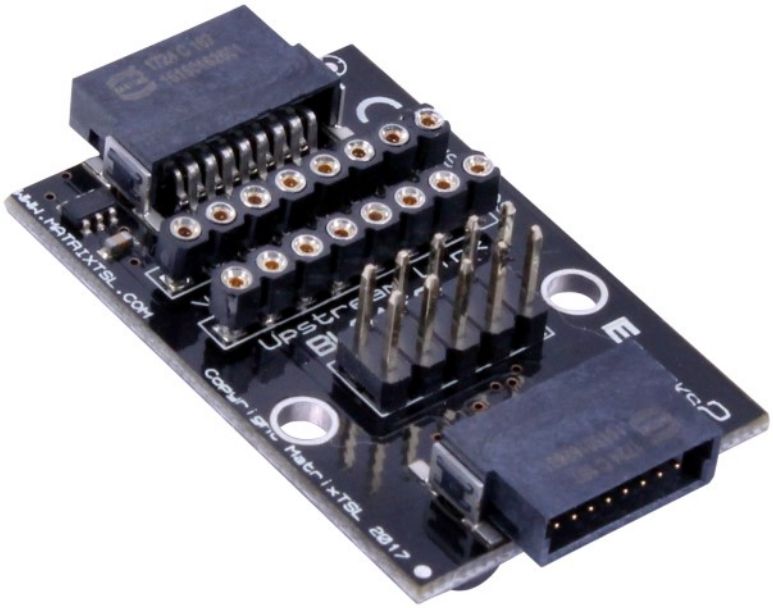

BL0158 - Board Schematic

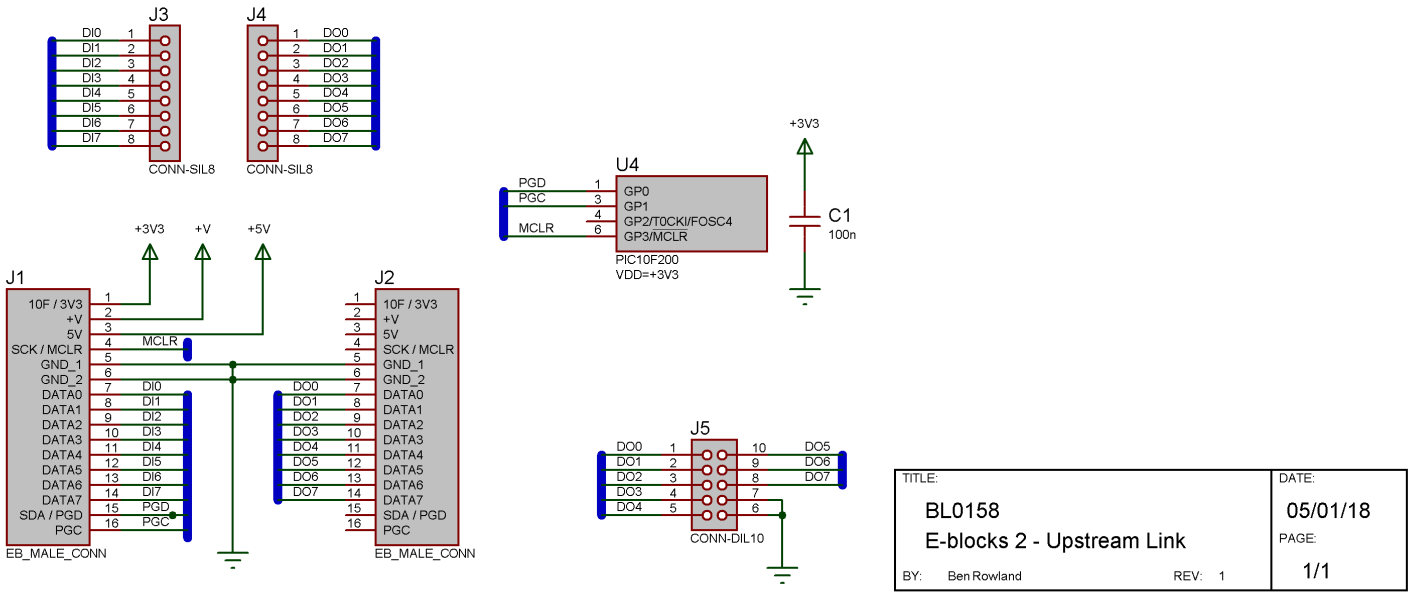

A&P INSTRUMENT®
科 藝 儀 器

Downstream - BL0161 - Manual Patch

The patch board allows the various data signals to be re-ordered between upstream and downstream boards. This is useful for upstream processors with peripherals using none standard connections or for combining signals together from multiple ports. The patch board comes complete with six Dupont style male to male cables allowing you to easily assign the signals to your downstream board.

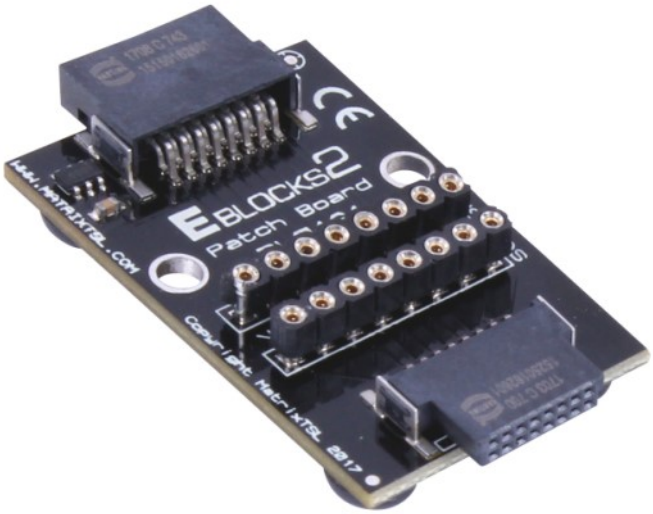

BL0161 - Board Schematic

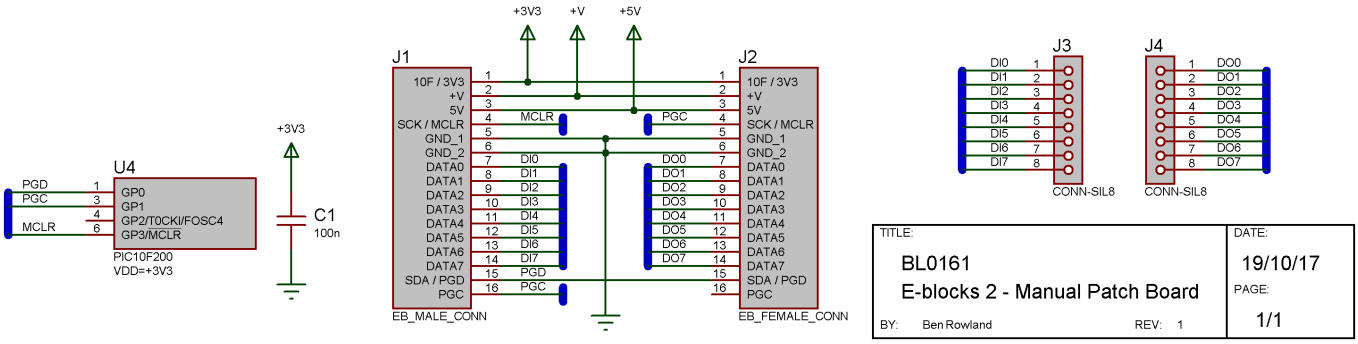

A&P INSTRUMENT®
科 藝 儀 器

Downstream - BL0162 - Servo Motor

The servo motor board allows up to eight servo motors to be connected to an E-blocks 2 system. Up to eight channels can be individually controlled for connection to device such as servo motors or brushless electronic speed controllers. The board also provides a DC socket allowing the motors to be powered from an external DC power supply separate from the E-blocks 2 supply rails. Overvoltage protection is built onto the board stopping any voltages greater than 6V from being allowed to damage the connected motors.

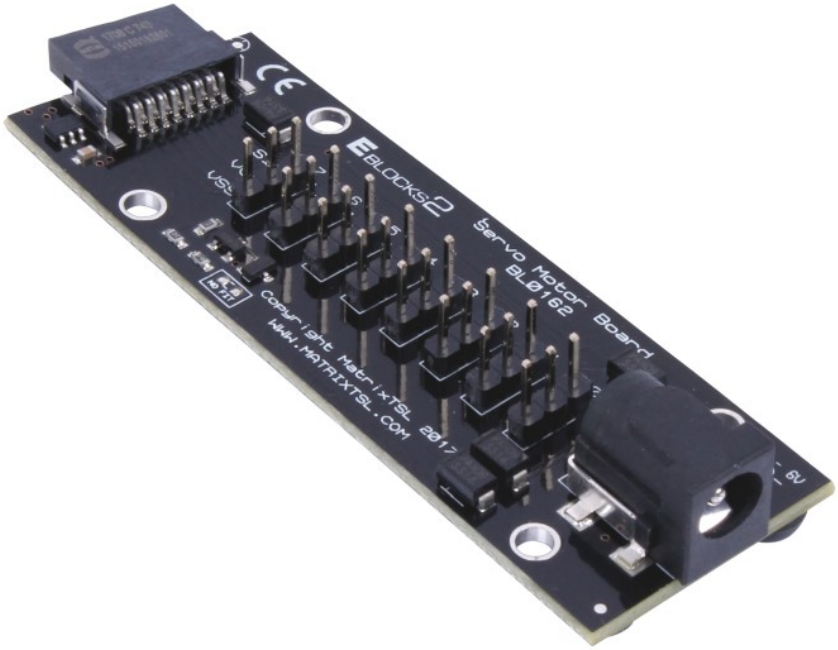

BL0162 - Board Schematic

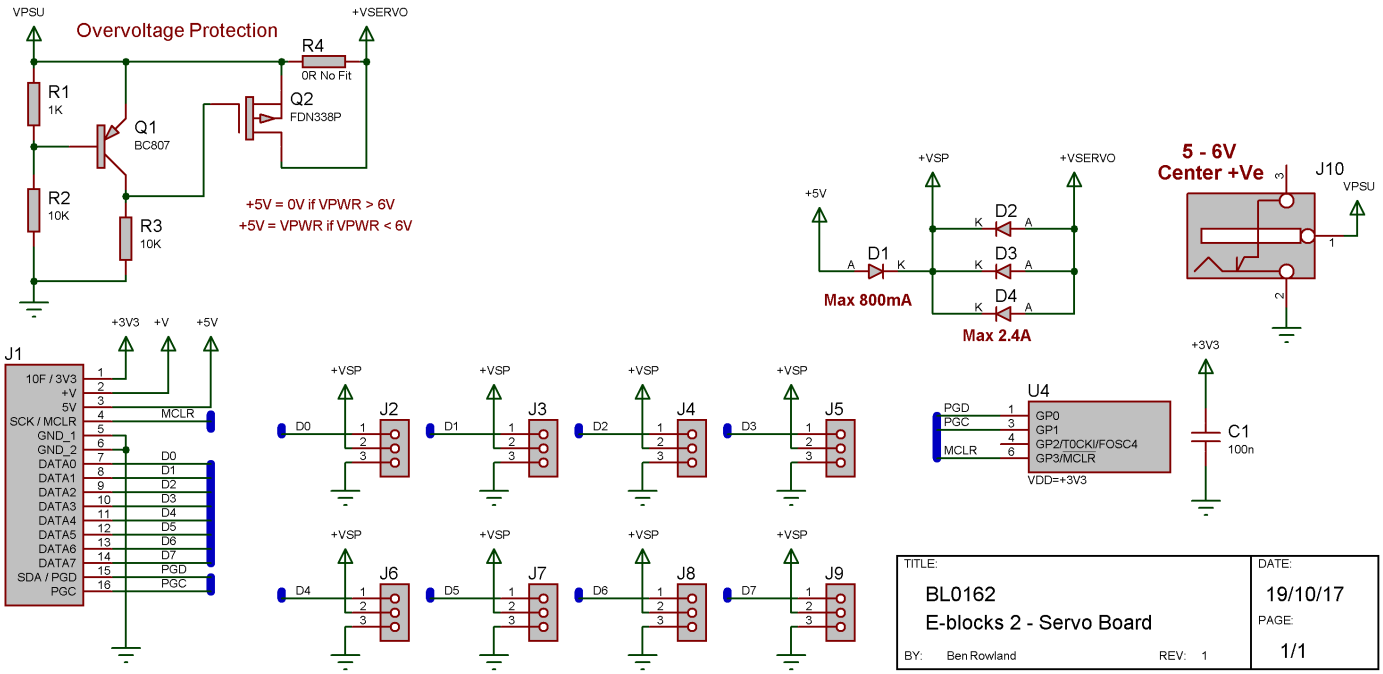

A&P INSTRUMENT®
科 藝 儀 器

Downstream - BL0167 - LED x 8

The LED board allows a bank of eight LED indicators to be added to the E-blocks 2 system. LEDs are useful tools as they allow you to indicate what is happening or the ongoing real time status of the system. LEDs can be driven in a digital way using on or off output states or an analogue way using pulse width modulation (PWM) techniques.

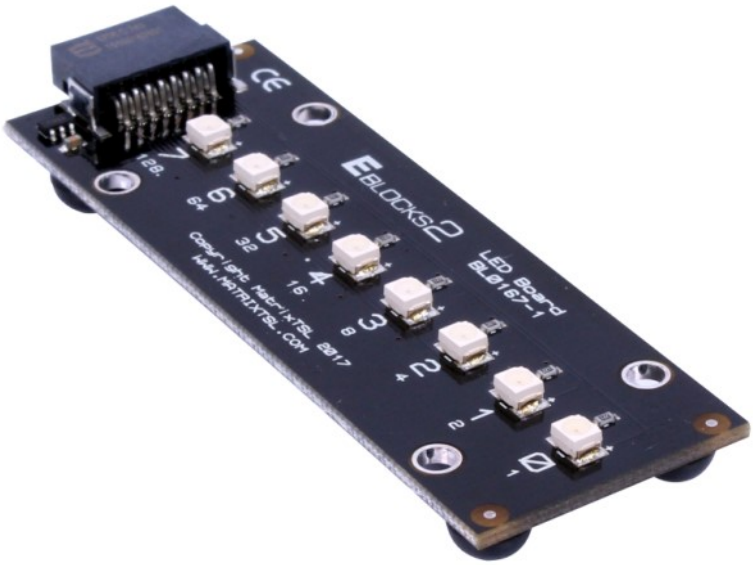

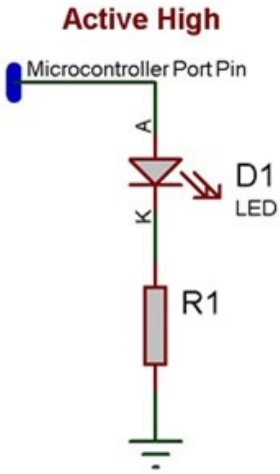

Each LED is in the active high configuration. When the E-blocks port pin outputs a logic high the LED will light. When the port pin outputs a logic low or is in input mode the LED will be off. Each LEDs brightness level can be altered by switching the LED on and off at high speed (PWM).

BL0167 - Board Schematic

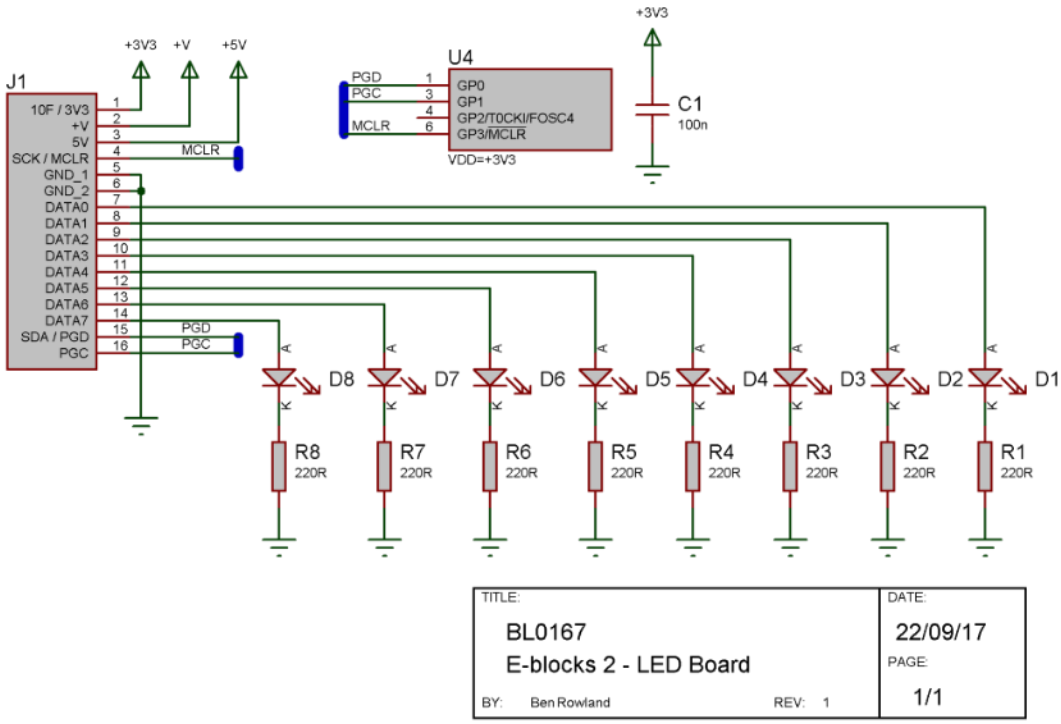

A&P INSTRUMENT®
科 藝 儀 器

Downstream - BL0169 - LCD

The LCD board provides a 20 x 4 character alphanumeric display compatible with the standard HD44780 type displays. An onboard microcontroller listens for HD44780 compatible commands and converts the incoming commands into SPI packets that drive the modern chip on glass (COG) graphical display.

Refer to the LCD Key Differences section for more info on the LCD including the in-built LCD character set.

Port Bit	LCD Pin
0	Data 0
1	Data 1
2	Data 2
3	Data 3
4	RS
5	Enable

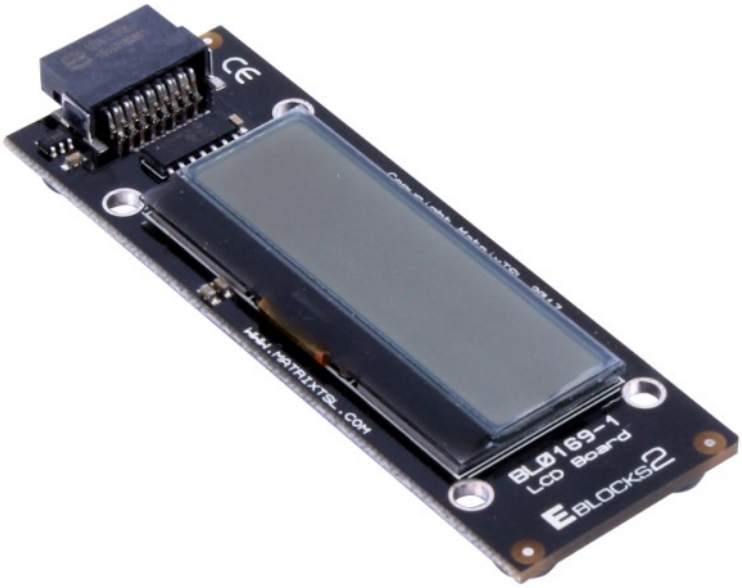

BL0169 - Board Schematic

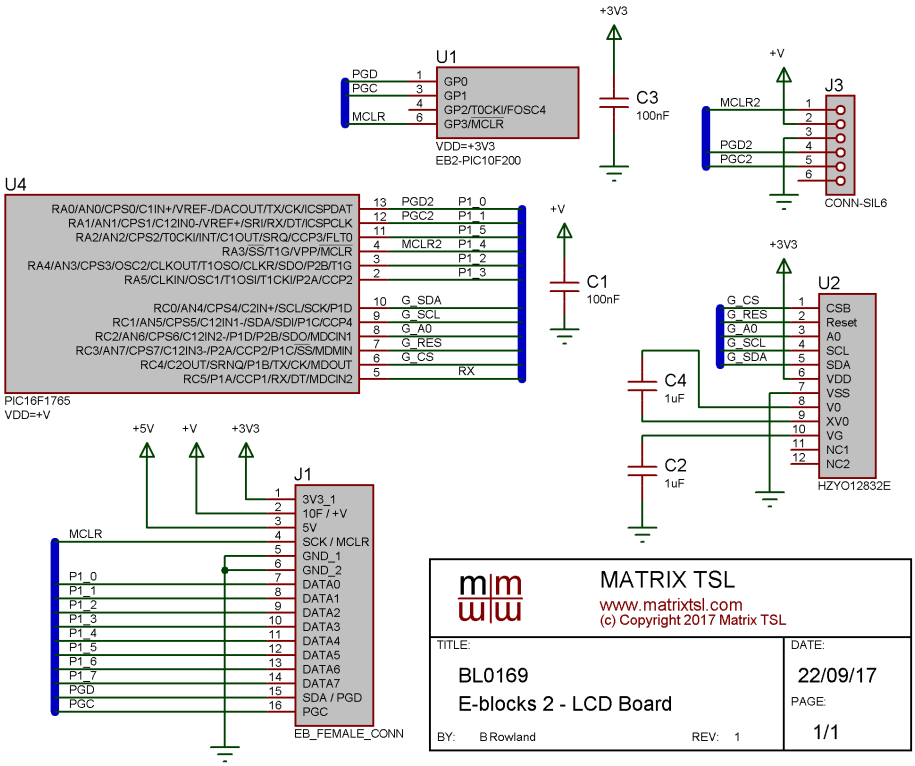

A&P INSTRUMENT®
科 藝 儀 器

Downstream - BL0170 - Bluetooth

The Bluetooth board contains a Microchip RN4677 module which adds fully certified Bluetooth 4.0 functionality to your E-blocks system. The Bluetooth modules has a transmit power of +2dBm, which should give a 100 yard transmission range at a data transfer rate of 50Kbps. The modules is programmed using an asynchronous serial AT command style protocol which can be interfaced to any upstream controller with a UART facility. The module allows for exploration of both Bluetooth classic (BR/EDR) and Low Energy (LE) protocols. Flowcode macros to support the use of this board are available.

Port Bit	Function
0	uC RX / BT TX
1	uC TX / BT RX
2	
3	
4	
5	
6	
7	

BL0170 - Board Schematic

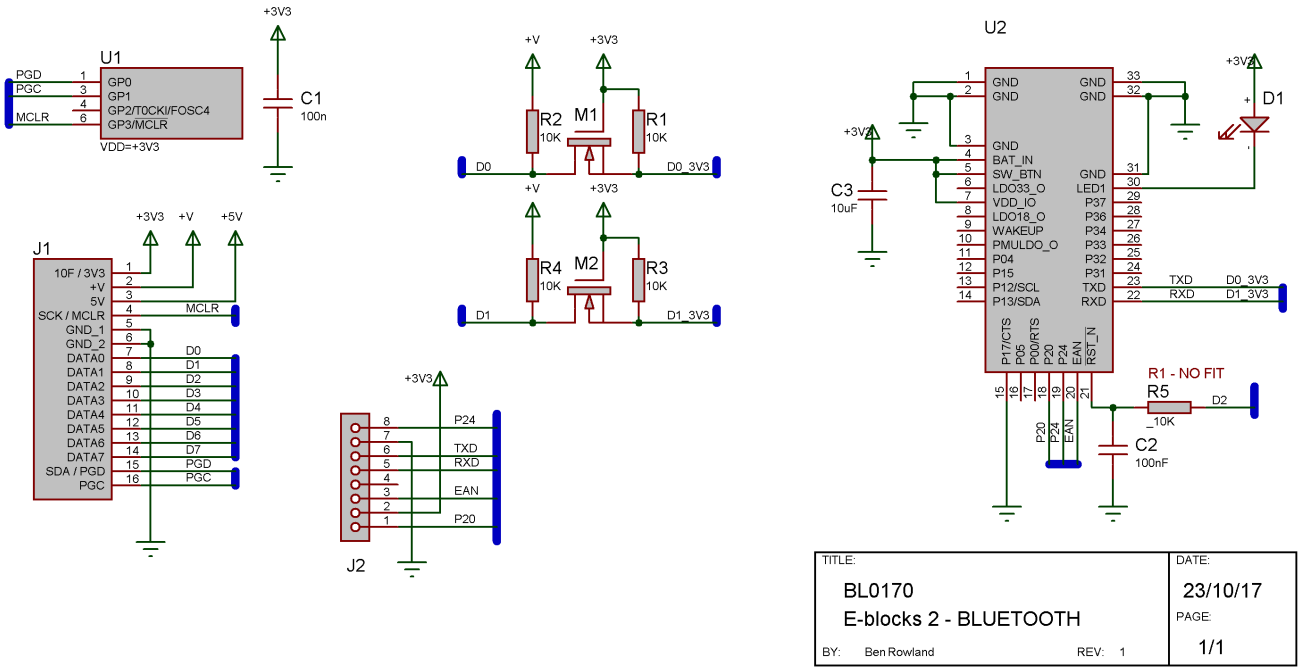

A&P INSTRUMENT®
科 藝 儀 器

Downstream - BL0173 - Screw Terminals

The terminals board provides screw terminals which can be used to directly connect wires to an E-blocks 2 system. Terminals are buffered by 220ohm resistors to provide protection for upstream boards. The various E-blocks 2 supply voltage rails are also available as screw terminals allowing you to power your external electronic devices.

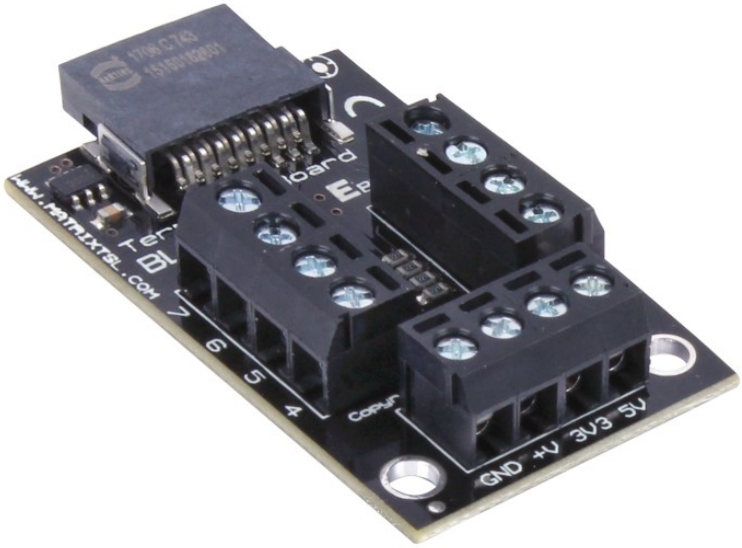

BL0173 - Board Schematic

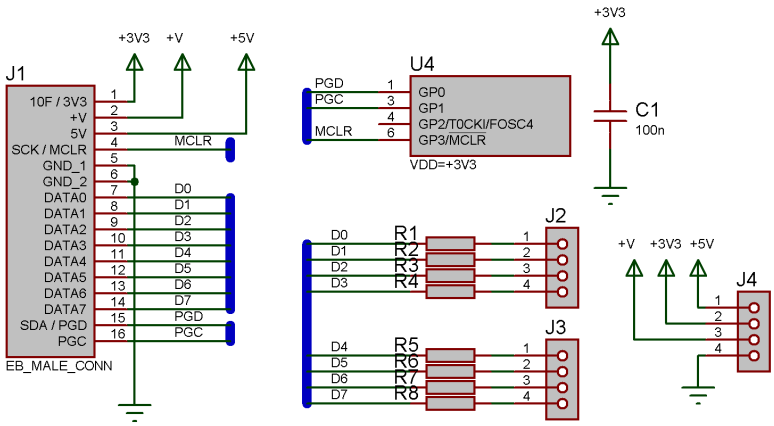

TITLE:	DATE:
BL0173 E-blocks 2 - Terminal Board	28/11/17
BY: Ben Rowland REV: 1	PAGE: 1/1

A&P INSTRUMENT®
科 藝 儀 器

Downstream - BL0183 - Relay

The relay board provides two electrically controllable relays which act as isolated switches. The external connections to the relays are provided using screw terminals and both the normally open (NO) and normally closed (NC) connections are available allowing for the maximum flexibility. Each relay features an LED to indicate when the relay is active. Two relay boards can be used on the same E-blocks port by using a BL0156 Splitter board and setting the slide switch on each board to opposing positions. The relays are rated for use with Mains voltage but great care should be taken to avoid electrical shocks when using high voltage such as mains. We recommend to always use an inline RCD and to place the E-blocks boards into a rugged, insulated enclosure with clear danger warnings.

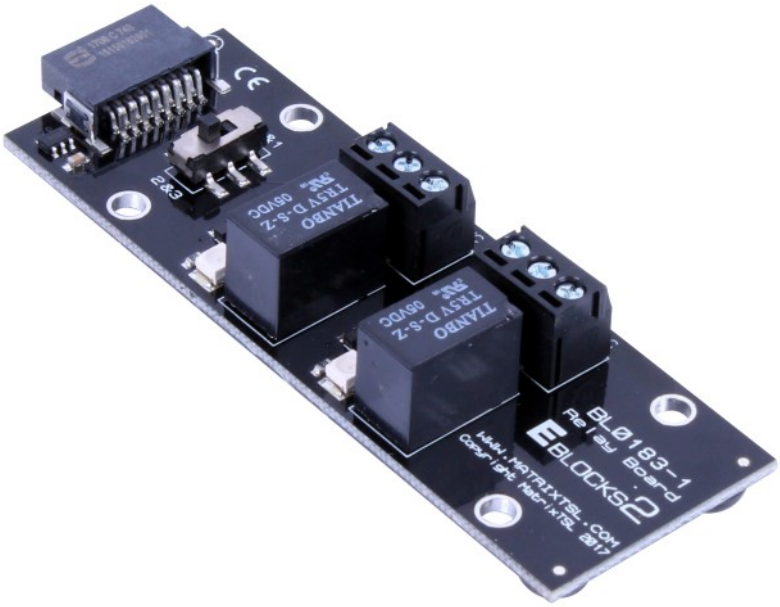

BL0183 - Board Schematic

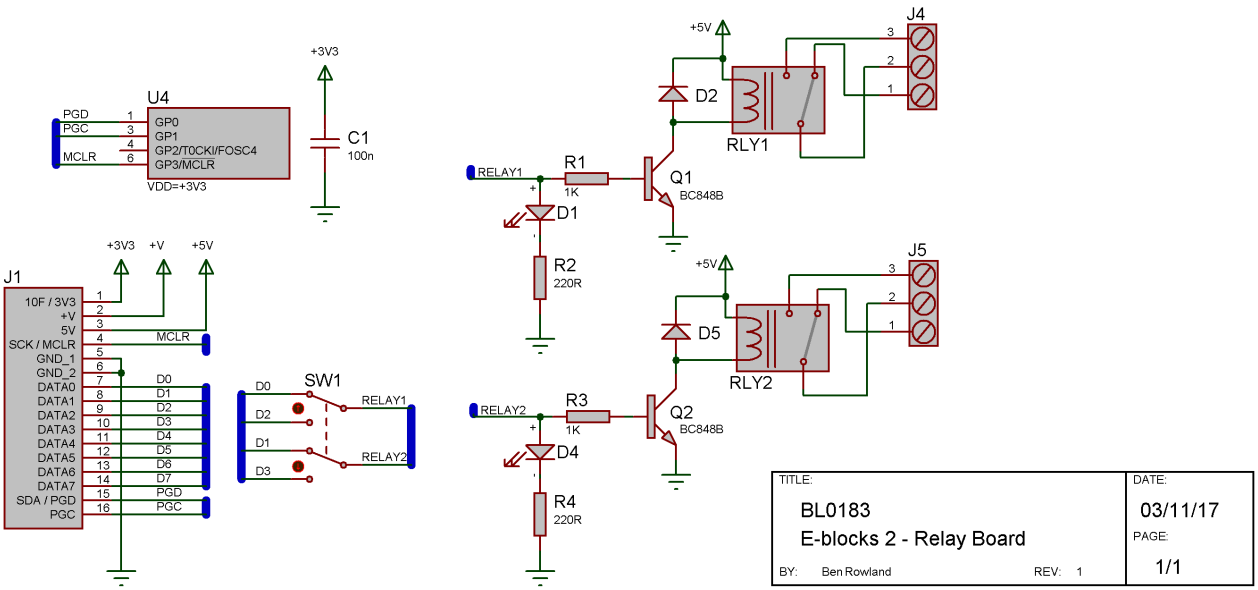

A&P INSTRUMENT®
科 藝 儀 器

Downstream - BL0187 - Ethernet

The Ethernet board provides a means of communicating via a standard RJ45 network cable with a router or network. It can be used for local network communications as well as internet based communications and IoT style applications. The board features a switch to allow two boards to be used together on the same E-blocks port using a splitter board for firewall type applications.

Port Bit	Function
0	CS0
1	CS1
2	Reset
3	MOSI
4	MISO
5	SCK
6	INT
7	

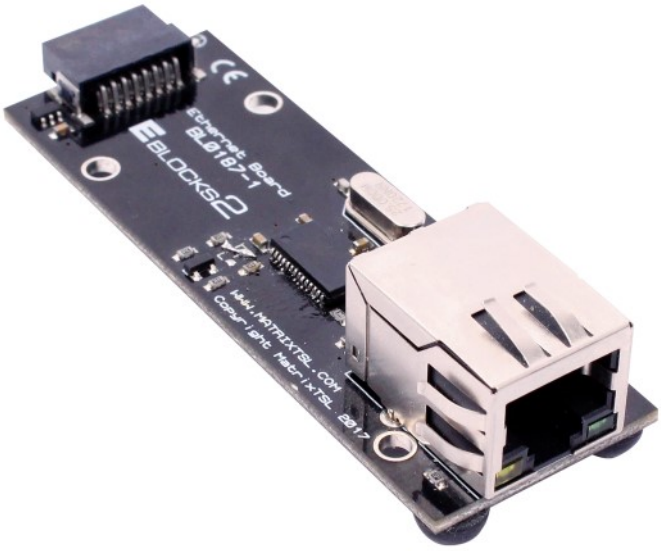

BL0187 - Board Schematic

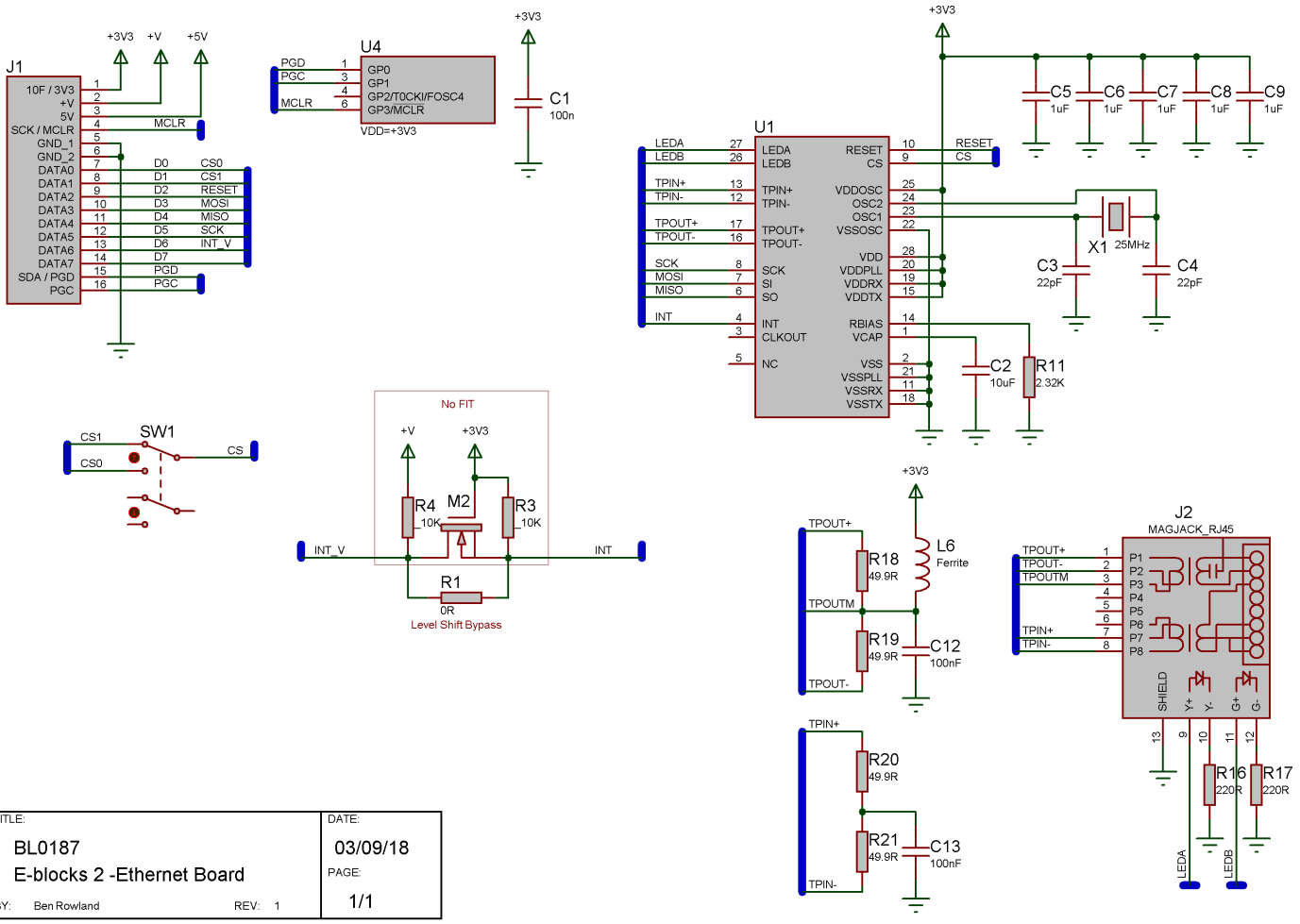

A&P INSTRUMENT®
科 藝 儀 器

Downstream - BL0197 - RFID

The RFID board provides a means of communicating with standard RFID type tags. The board supports MIFARE and ICODE type tags and features an on-board antenna complete with tuning capacitor. The board features a buzzer which can be programmed to beep on the presence of a RFID tag as well as signals back to the microcontroller to detect when a valid tag is present.

Port Bit	Function
0	uC RX / RFID TX
1	uC TX / RFID RX
2	Beep
3	LED
4	CTS
5	
6	
7	

BL0197 - Board Schematic

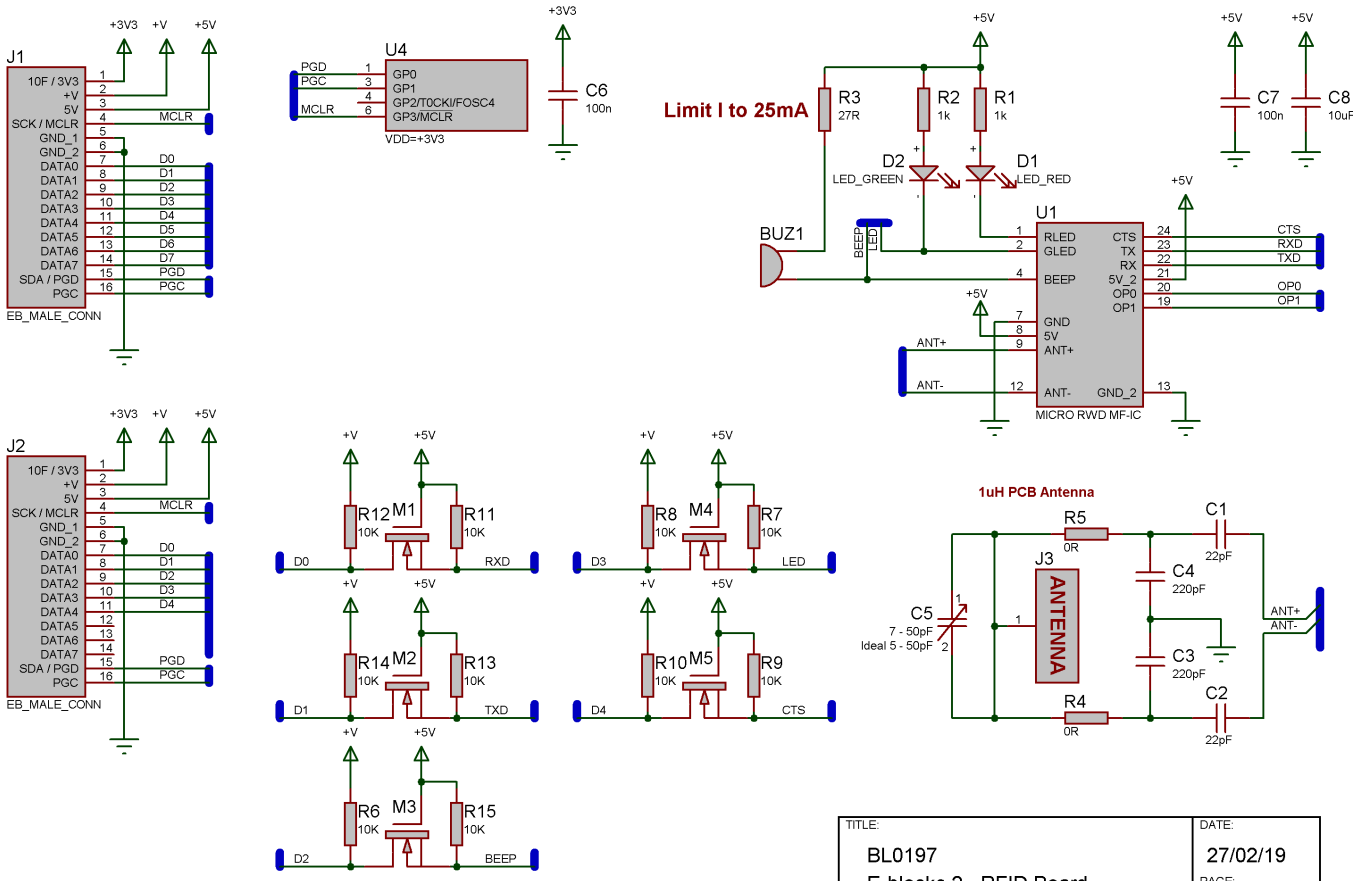

A&P INSTRUMENT®
科 藝 儀 器

Upstream - BL0011 - 8-Bit PIC Programmer

The 8-bit PIC microcontroller programmer connects to your PC via USB to provide you with a powerful microcontroller programming and debugging platform. The board can be used with various programming languages including: Assembly, C and Flowcode. To program the PIC on the board a free tool called mLoader is available to download from the Matrix TSL website. The board comes complete with a powerful PIC16F18877 microcontroller. The board presents all port pins collected together as E-blocks 2 sockets. The board takes power from an external power supply or from the micro USB port. Using the board with Flowcode allows the use of the advanced Ghost debugging features including in circuit debugging, real time pin monitoring and bus decoding. Microchip PICkit compatible sockets are fitted to provide an alternative reprogramming and debugging techniques.

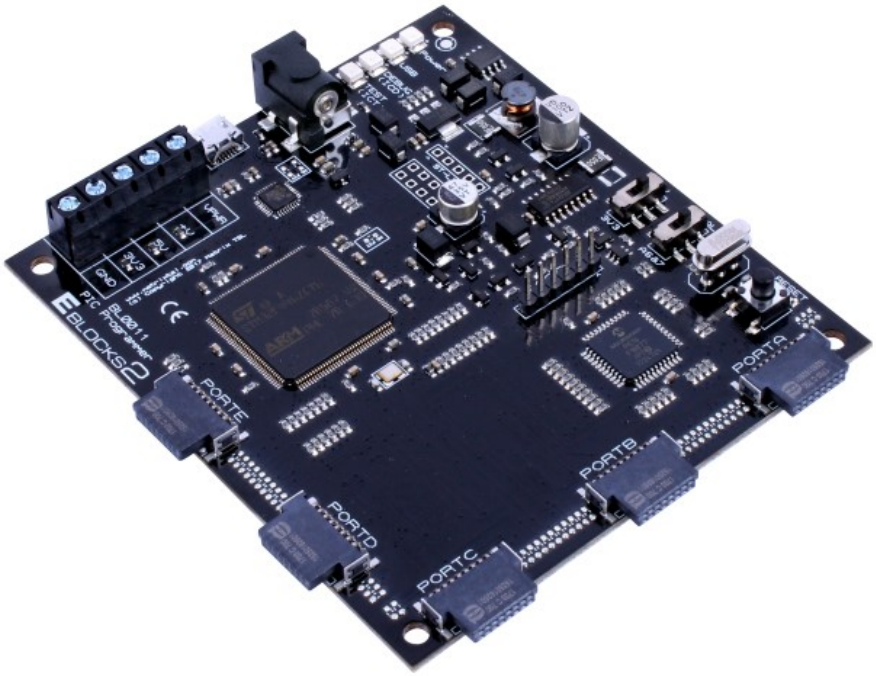

BL0011 - Block Diagram

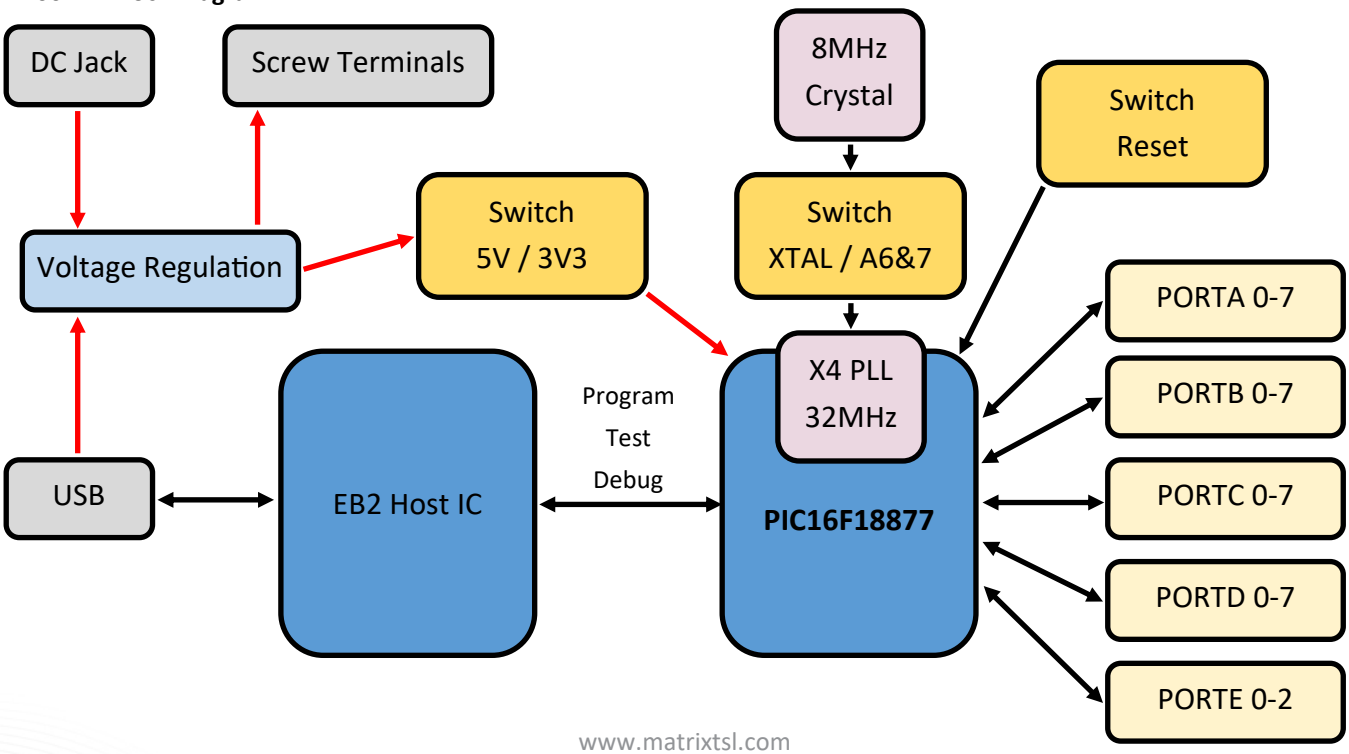

A&P INSTRUMENT®
科 藝 儀 器

Upstream - BL0011 - 8-Bit PIC Programmer

Board Layout

1. DC Power Jack 7.5 - 12V
2. Micro USB Socket
3. Status LEDs
4. Power Output Terminals
5. Ghost Microcontroller IC
6. High Speed USB Transceiver
7. Target Microcontroller 16F18877
8. Voltage Selection Switch
9. Oscillator Selection Switch
10. 8MHz Socketed Crystal
11. Reset Switch
12. EB2 Port A Connector
13. EB2 Port B Connector
14. EB2 Port C Connector
15. EB2 Port D Connector
16. EB2 Port E Connector

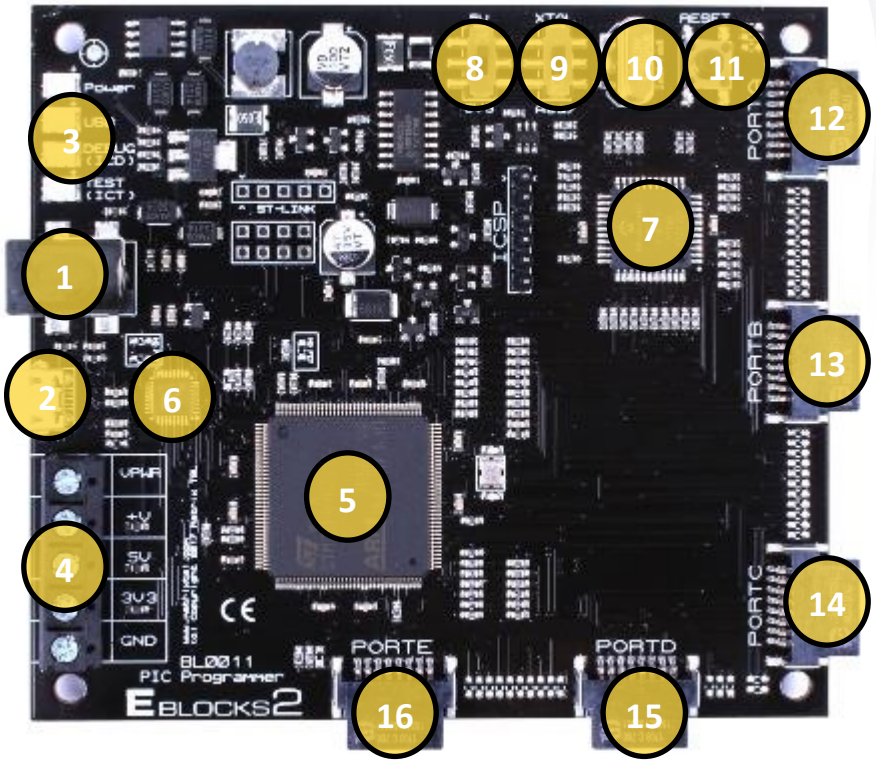

BL0011 - Board Schematic

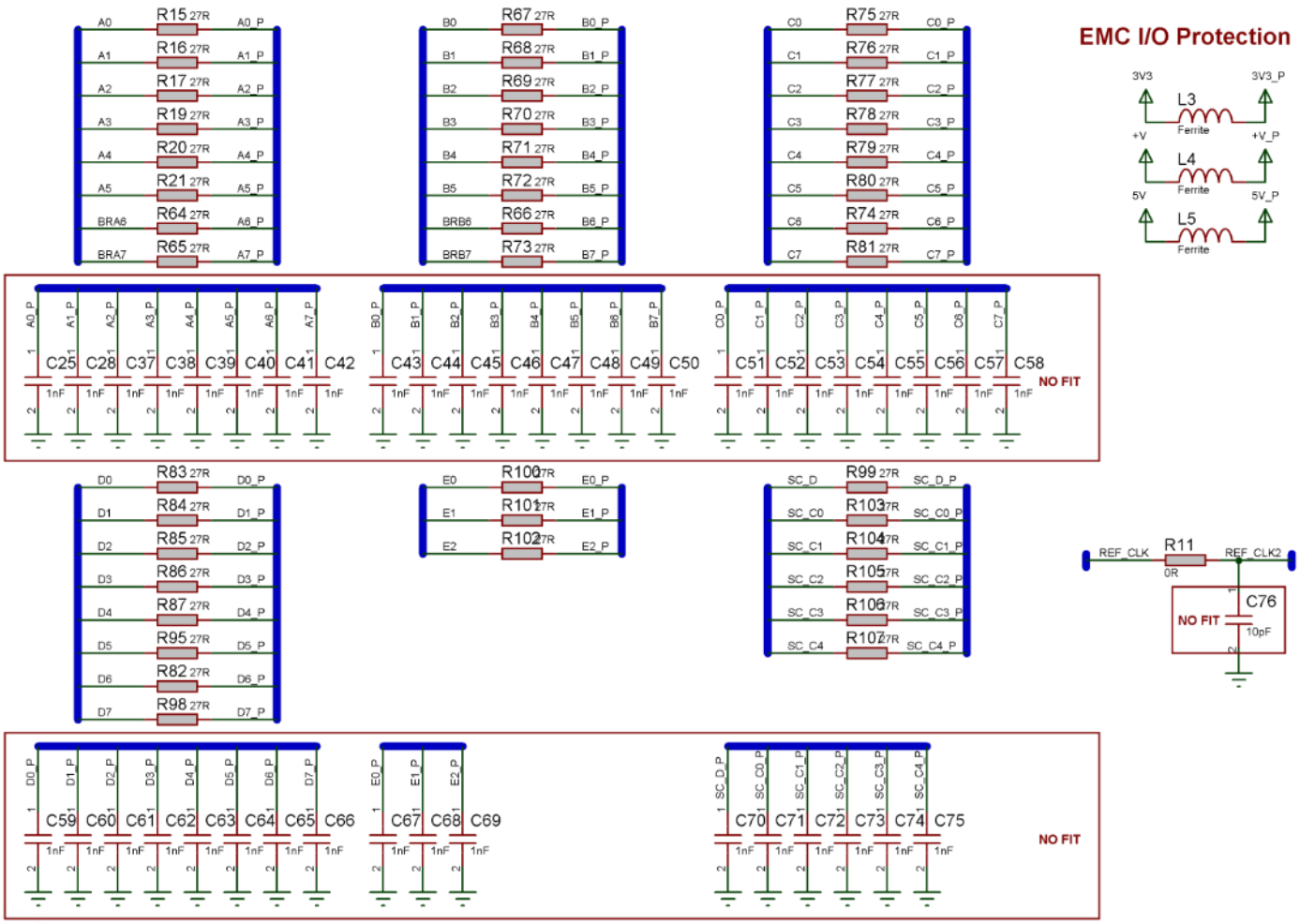

A&P INSTRUMENT®
科 藝 儀 器

Upstream - BL0011 - 8-Bit PIC Programmer

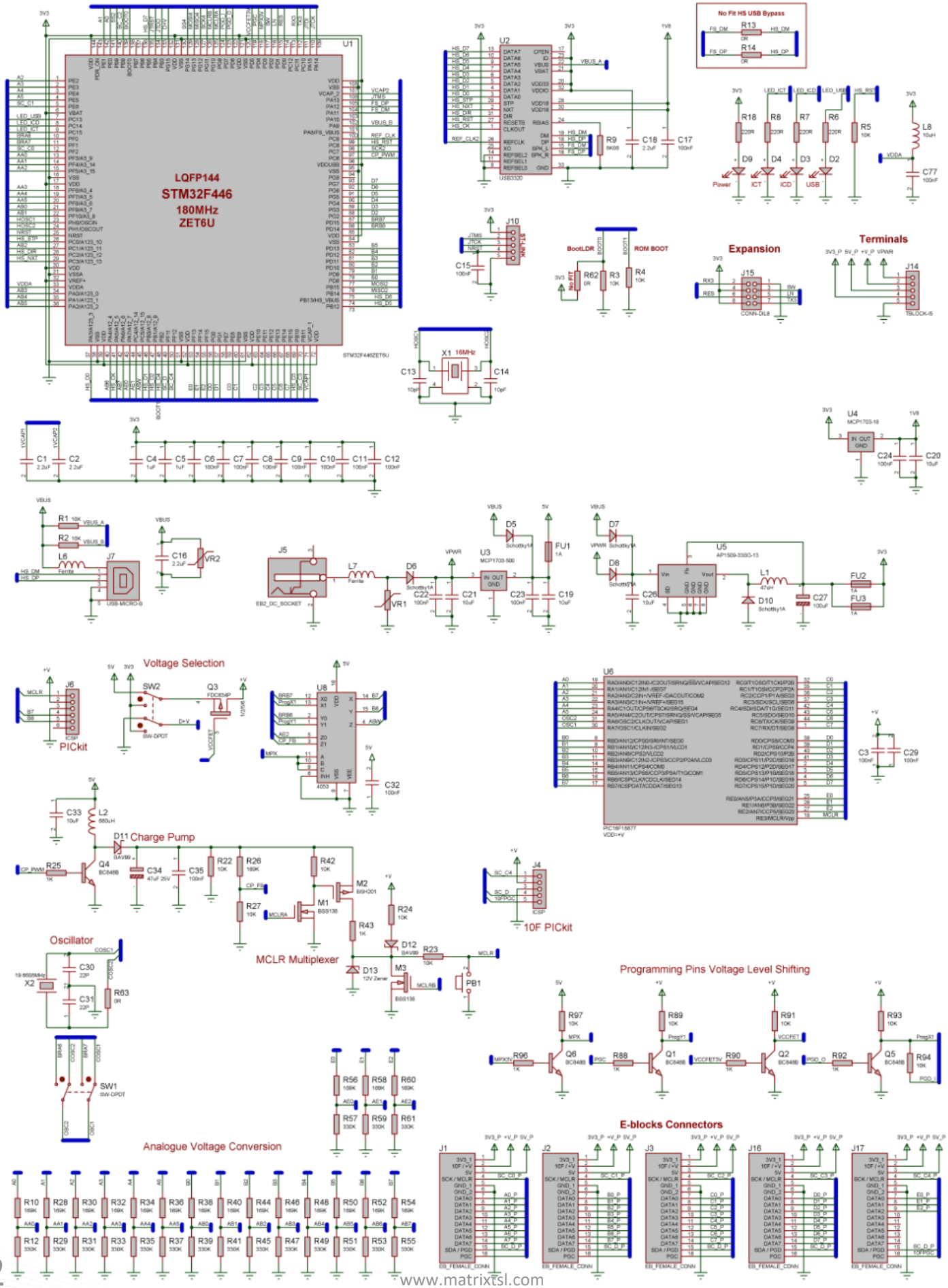

A&P INSTRUMENT®
科 藝 儀 器

Upstream - BL0011 - 8-Bit PIC Programmer

Ghost Specification

VCC Voltage: 5V / 3V3
ICD Pins: Clock = B6 / Data = B7
ICT Digital Channels: 35
ICT Analogue Channels: 17
ICT Port Pins Map:

	7	6	5	4	3	2	1	0
Port A	A7	A6	A5	A4	A3	A2	A1	A0
Port B	B7	B6	B5	B4	B3	B2	B1	B0
Port C	C7	C6	C5	C4	C3	C2	C1	C0
Port D	D7	D6	D5	D4	D3	D2	D1	D0
Port E					E3	E2	E1	E0

White = No Sampling / Red = Digital Only / Blue = Analogue Only / Green = Digital & Analogue

A&P INSTRUMENT®
科 藝 儀 器

Upstream - BL0032 - 16-Bit dsPIC Programmer

The 16-bit dsPIC microcontroller programmer connects to your PC via USB to provide you with a powerful microcontroller programming and debugging platform. The board can be used with various programming languages including: Assembly, C and Flowcode. To program the dsPIC on the board a free tool called mLoader is available to download from the Matrix TSL website. The board comes complete with a powerful dsPIC33EP256MU806 microcontroller. The board presents all port pins collected together as E-blocks 2 sockets. The board takes power from an external power supply or from the micro USB port. Using the board with Flowcode allows the use of the advanced Ghost debugging features including in circuit debugging, real time pin monitoring and bus decoding. Microchip PICkit compatible sockets are fitted to provide an alternative reprogramming and debugging techniques.

Port Bit	PORT F/C	PORT D/G
0	F0	D8
1	F1	D9
2	N/C	D10
3	F3	D11
4	F4	G6
5	F5	G7
6	C13	G8
7	C14	G9

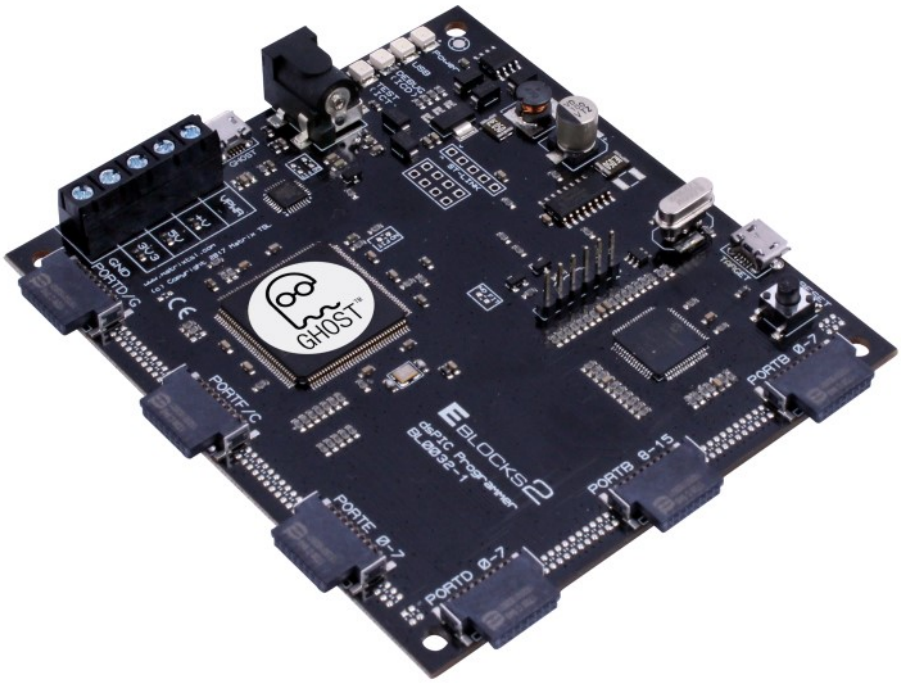

BL0032 - Block Diagram

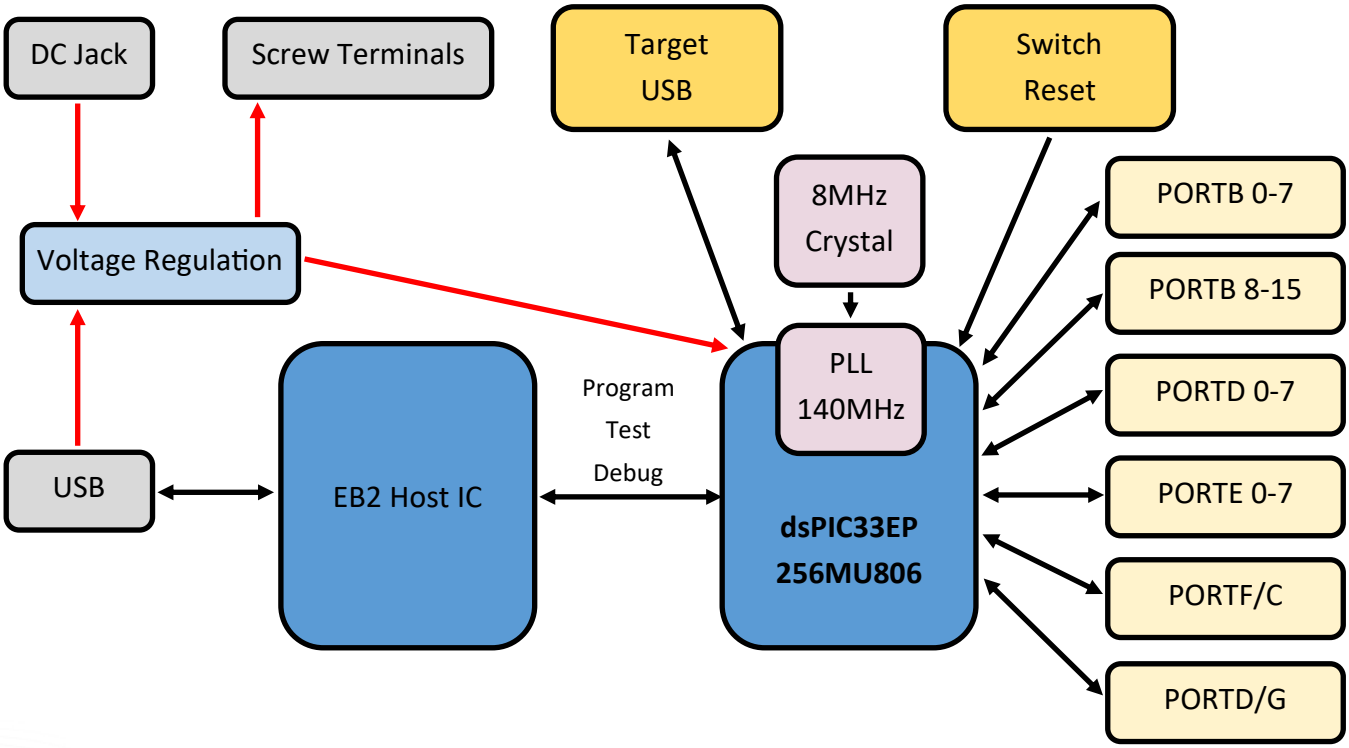

A&P INSTRUMENT®
科 藝 儀 器

Upstream - BL0032 - 16-Bit dsPIC Programmer

Board Layout

1. DC Power Jack 7.5 - 12V
2. Micro USB Socket
3. Status LEDs
4. Power Output Terminals
5. Ghost Microcontroller IC
6. High Speed USB Transceiver
7. Target Microcontroller (33EP256MU806)
8. 8MHz Socketed Crystal
9. Target Micro USB Socket
10. Reset Switch
11. EB2 Port B 0-7 Connector
12. EB2 Port B 8-15 Connector
13. EB2 Port D 0-7 Connector
14. EB2 Port E 0-7 Connector
15. EB2 Port F/C Connector
16. EB2 Port D/G Connector

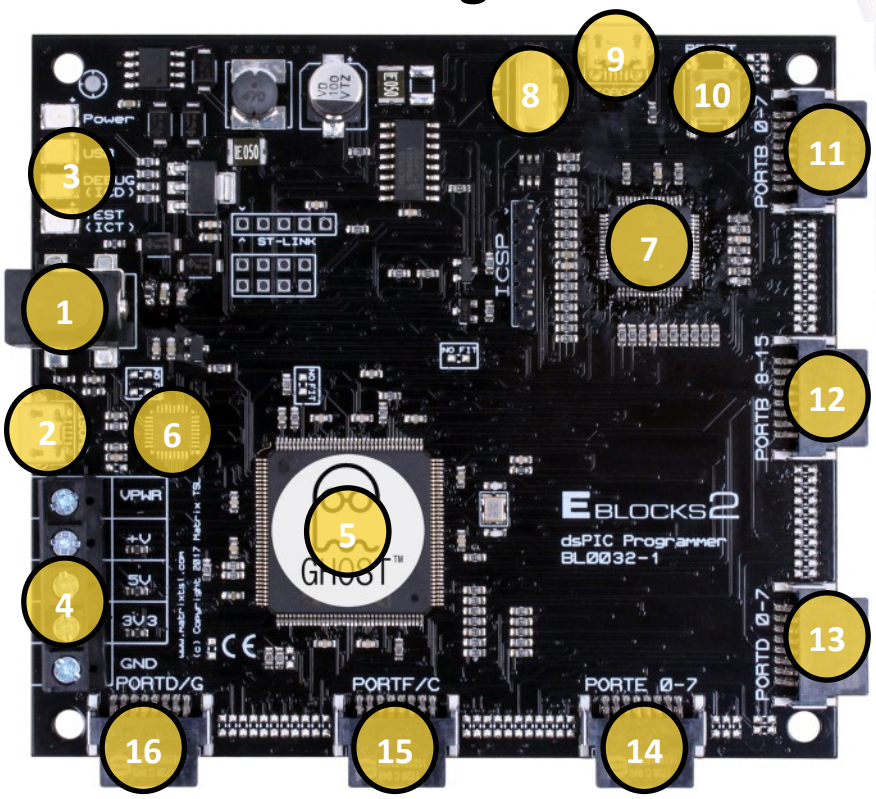

BL0032 - Board Schematic

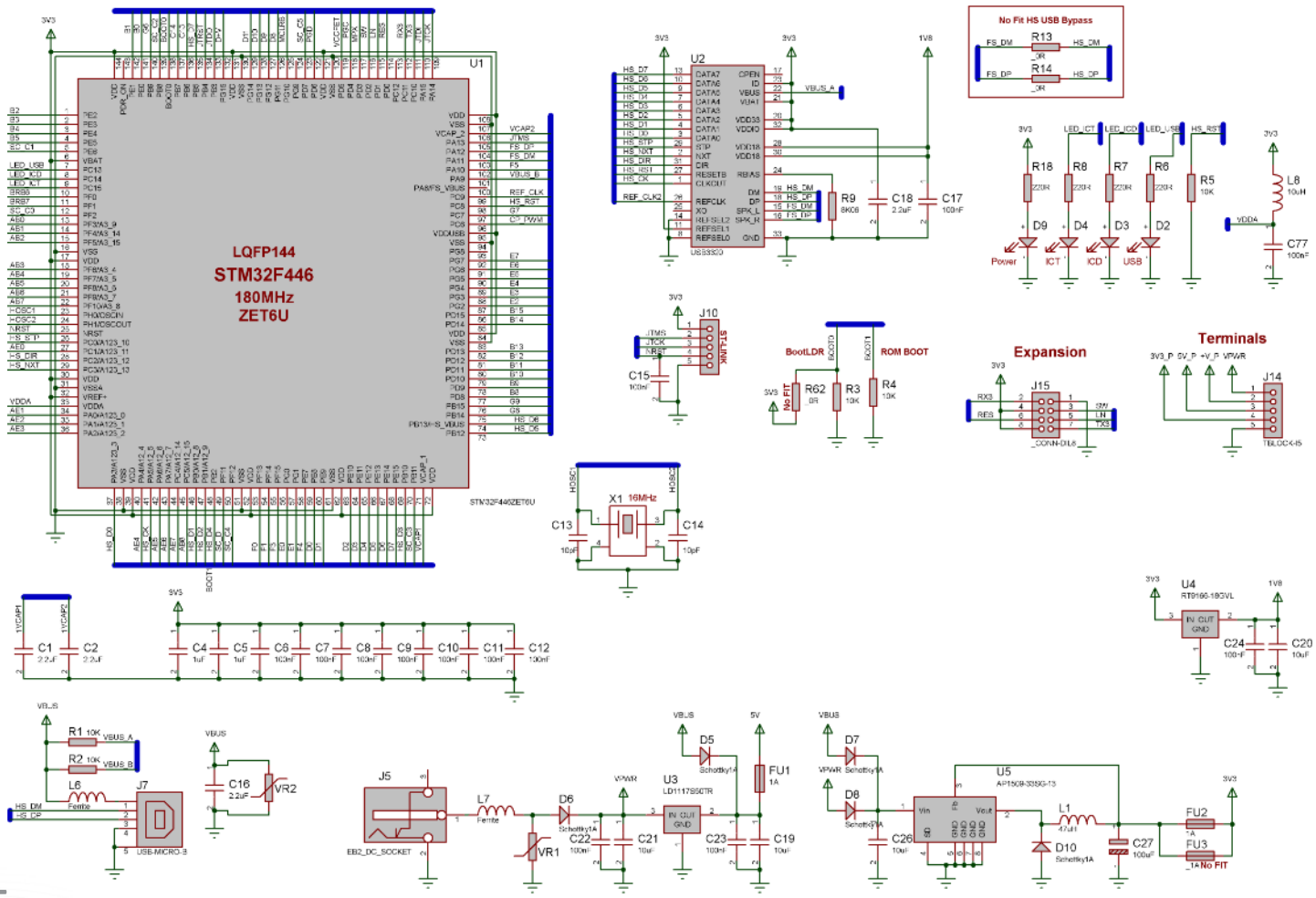

A&P INSTRUMENT®
科 藝 儀 器

Upstream - BL0032 - 16-Bit dsPIC Programmer

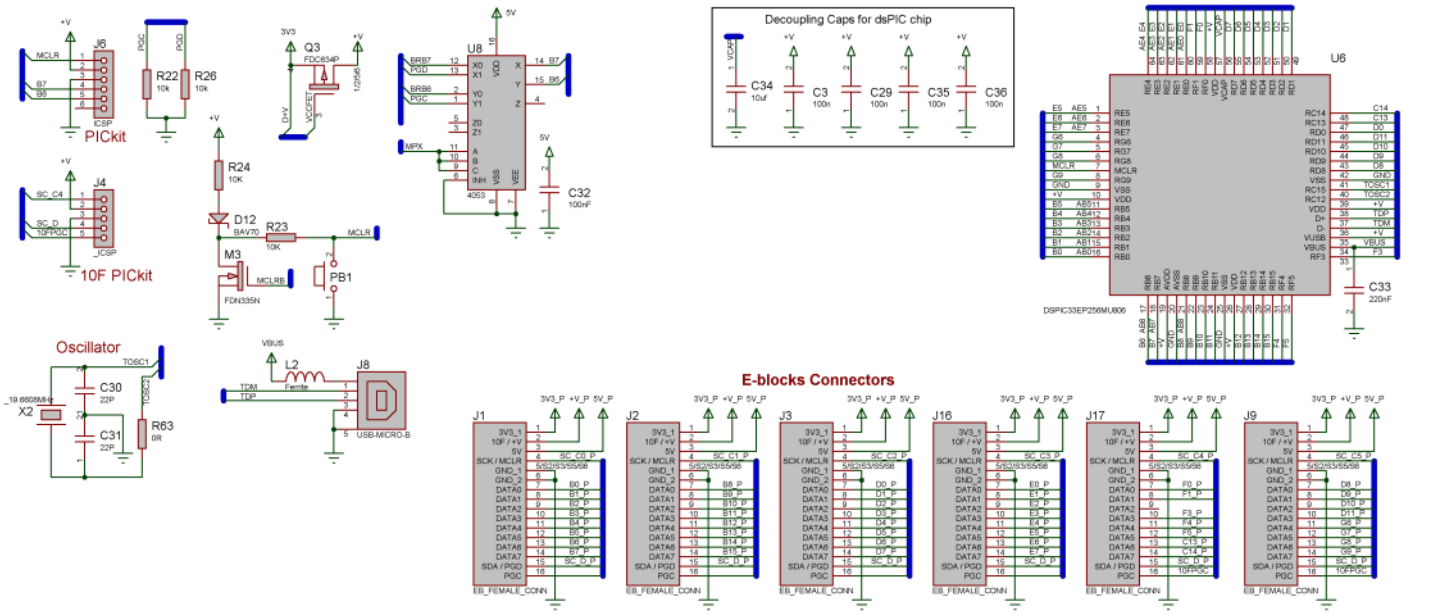

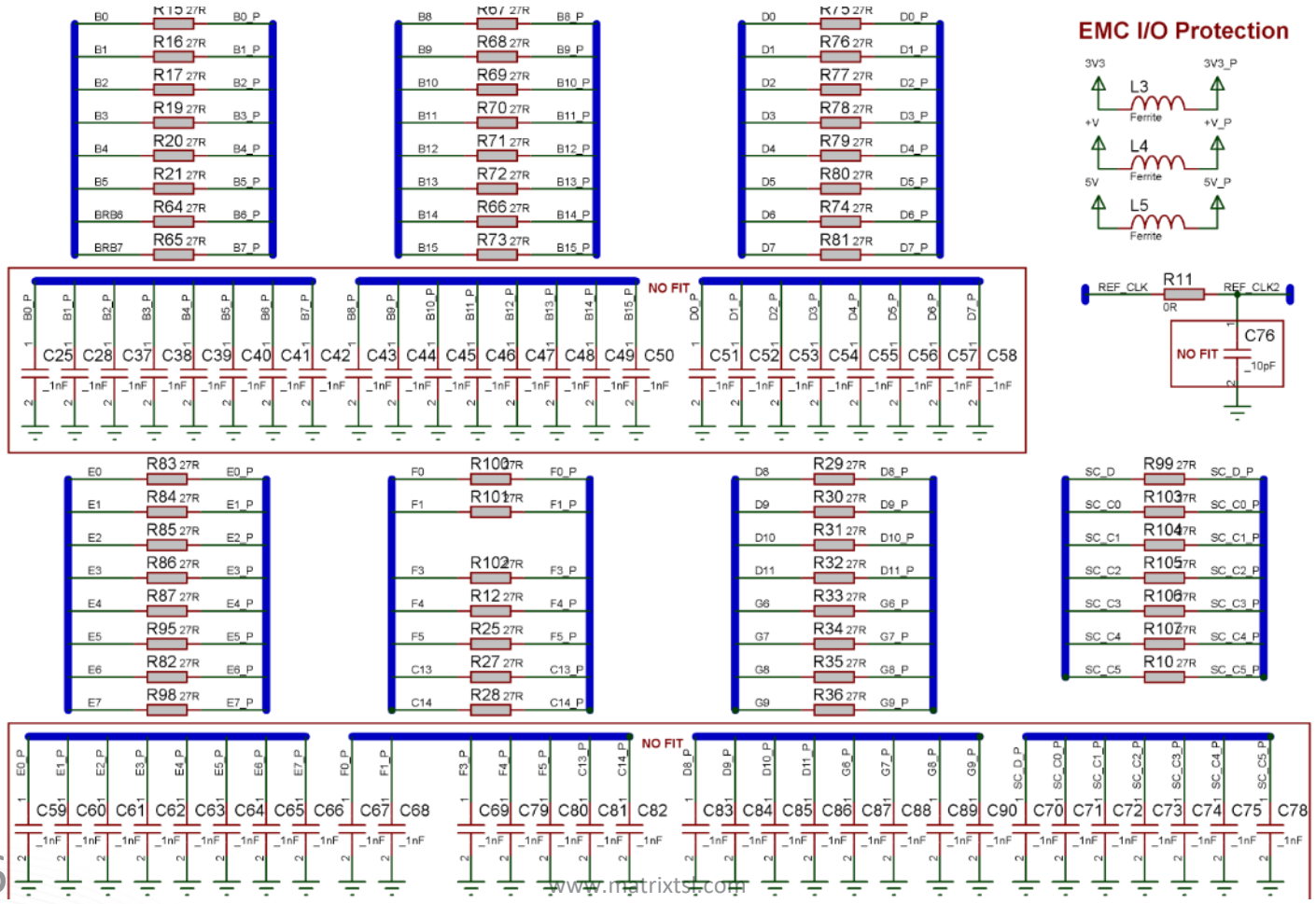

www.matrixtsl.com

A&P INSTRUMENT®
科 藝 儀 器

Upstream - BL0032 - 16-Bit dsPIC Programmer

Ghost Specification

VCC Voltage: 3V3
ICD Pins: Clock = B6 / Data = B7
ICT Digital Channels: 47
ICT Analogue Channels: 17
ICT Port Pins Map:

	7	6	5	4	3	2	1	0
Port BL	B7	B6	B5	B4	B3	B2	B1	B0
Port BH	B15	B14	B13	B12	B11	B10	B9	B8
Port D	D7	D6	D5	D4	D3	D2	D1	D0
Port E	E7	E6	E5	E4	E3	E2	E1	E0
Port F/C	C14	C13	F5	F4	F3		F1	F0
Port D/G	G9	G8	G7	G6	D11	D10	D9	D8

White = No Sampling / Red = Digital Only / Blue = Analogue Only / Green = Digital & Analogue

A&P INSTRUMENT®
科 藝 儀 器

Upstream - BL0036 - Raspberry Pi Shield

The Raspberry Pi Shield allows you to connect a Raspberry Pi PCB computer (such as the Raspberry Pi 3 Model B) up to an E-blocks system to provide you with a powerful programming and debugging platform. The board presents all GPIO and peripheral pins collected together as E-blocks 2 sockets. The board takes power from an external power supply or from the micro USB port or from the Pi's power source. Using the board with Flowcode allows the use of the advanced Ghost debugging features including in circuit debugging, real time pin monitoring and bus decoding.

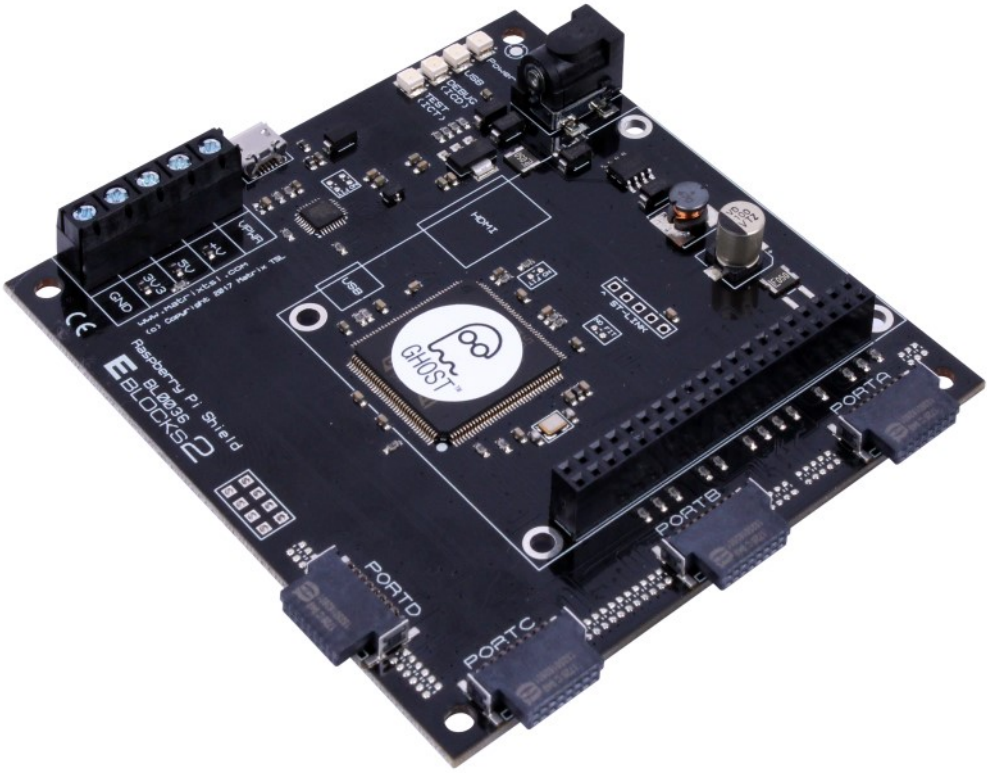

BL0036 - Block Diagram

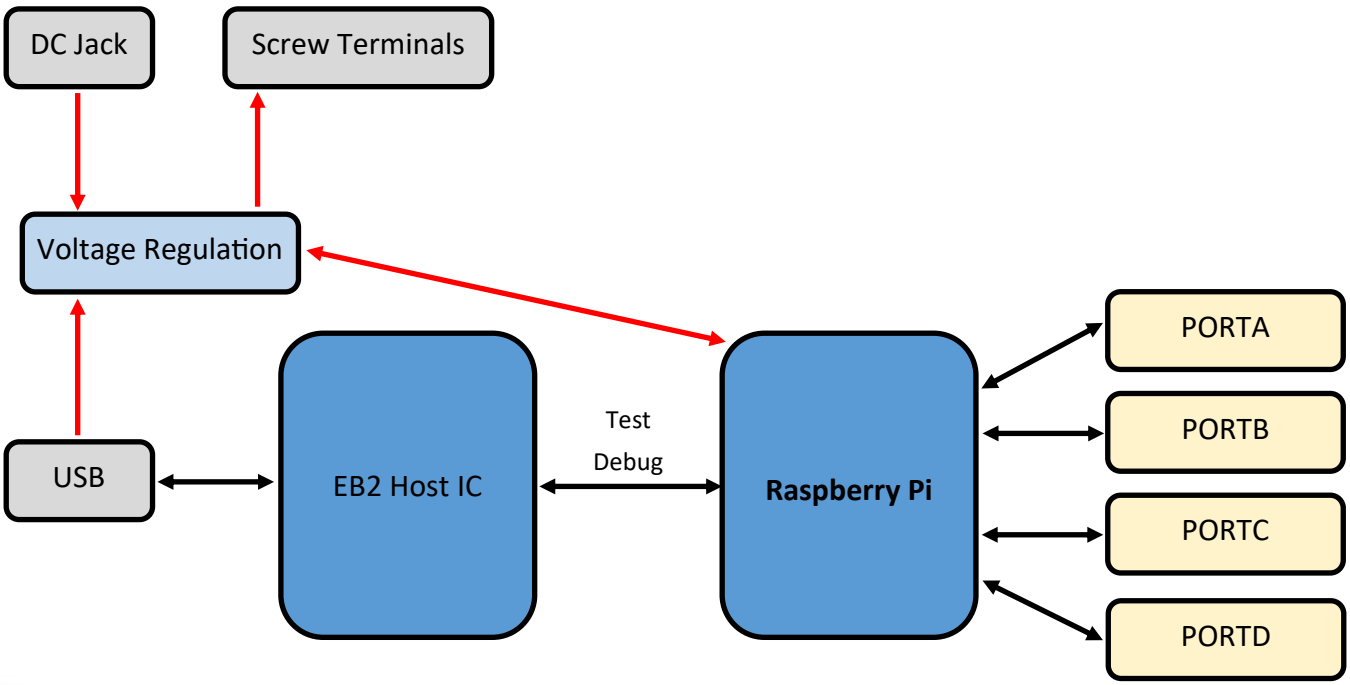

A&P INSTRUMENT®
科 藝 儀 器

Upstream - BL0036 - Raspberry Pi Shield

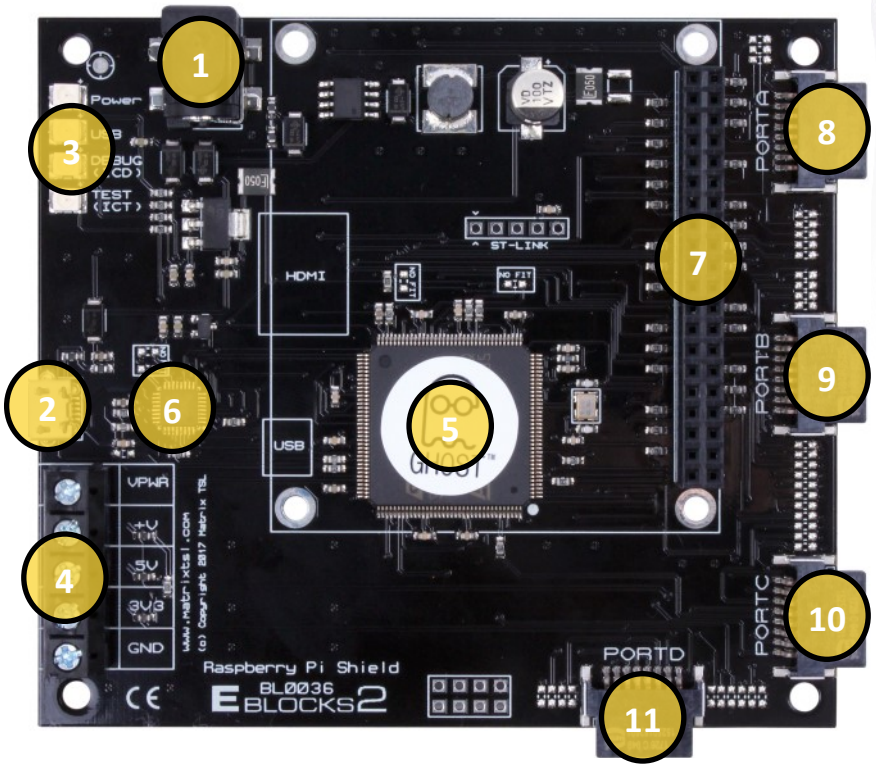

Board Layout

1. DC Power Jack 7.5 - 12V
2. Micro USB Socket
3. Status LEDs
4. Power Output Terminals
5. Ghost Microcontroller IC
6. High Speed USB Transceiver
7. Raspberry Pi GPIO Socket
8. EB2 Port A
9. EB2 Port B
10. EB2 Port C
11. EB2 Port D

GPIO Pin Mapping (RPI 2 & 3)

Pin	7	6	5	4	3	2	1	0
PortA			GPIO 0	GPIO 1	GPIO 5	GPIO 6	GPIO 7	GPIO 4
PortB	GPIO 16	GPIO 26	GPIO 25	GPIO 24	GPIO 23	GPIO 22	GPIO 17	GPIO 27
PortC	GPIO 2	GPIO 3	GPIO 11	GPIO 9	GPIO 10	GPIO 8	GPIO 14	GPIO 15
PortD			GPIO 21	GPIO 19	GPIO 20	GPIO 18	GPIO 12	GPIO 13

Peripheral Pin Mapping (RPI 2 & 3)

Pin	7	6	5	4	3	2	1	0
PortA								
PortB								
PortC	SDA1	SCL1	SCK0	MISO0	MOSI0	SPI0SS0	TX	RX
PortD			SCK1	MISO1	MOSI1	SPI1SS0	PWM0	PWM1

A&P INSTRUMENT®
科 藝 儀 器

Upstream - BL0036 - Raspberry Pi Shield

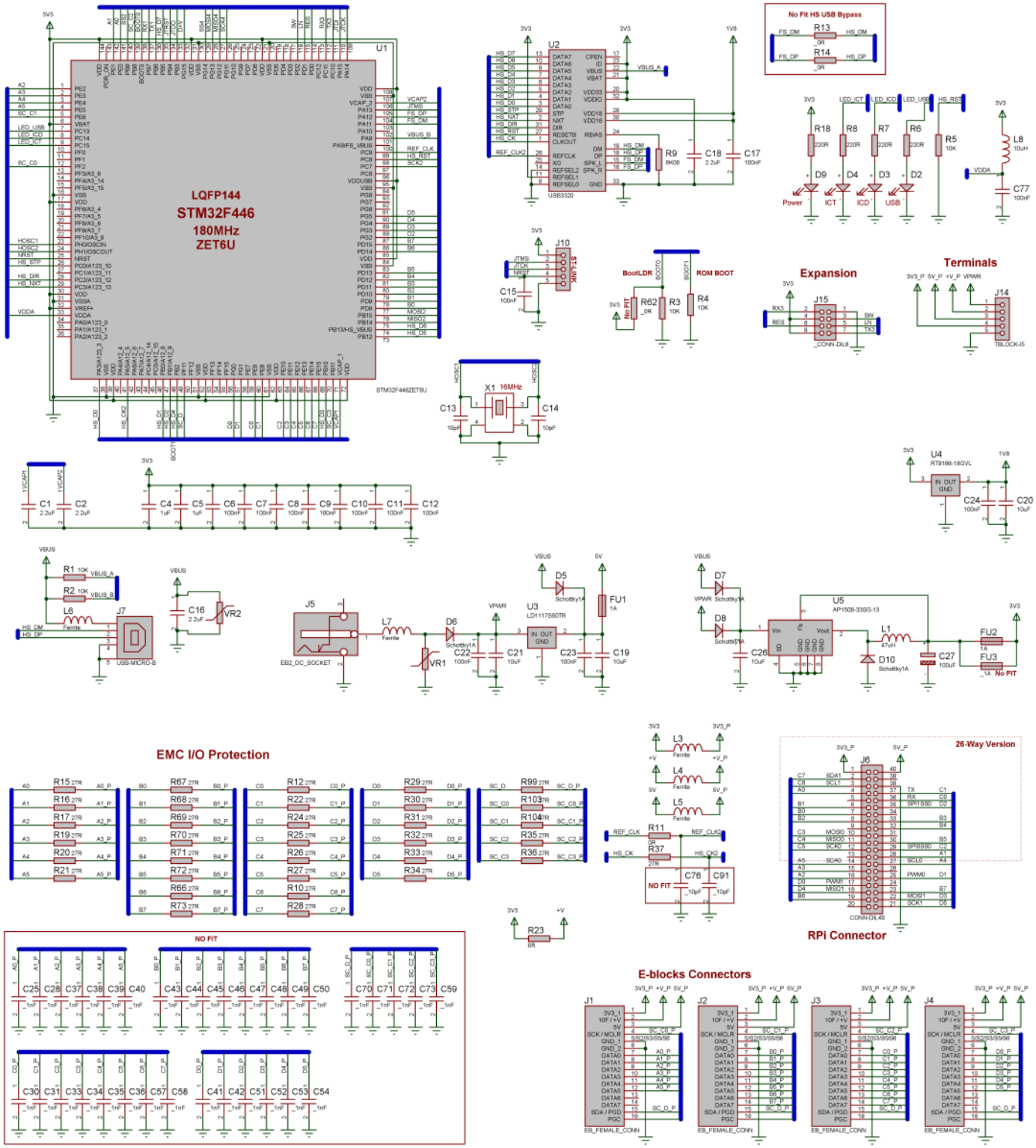

A&P INSTRUMENT®
科 藝 儀 器

Upstream - BL0036 - Raspberry Pi Shield

Ghost Specification

VCC Voltage: 3V3
ICD Pins: Clock = B6 / Data = B7
ICT Digital Channels: 28
ICT Analogue Channels: 0
ICT Port Pins Map:

	7	6	5	4	3	2	1	0
Port A			A5	A4	A3	A2	A1	A0
Port B	B7	B6	B5	B4	B3	B2	B1	B0
Port C	C7	C6	C5	C4	C3	C2	C1	C0
Port D			D5	D4	D3	D2	D1	D0

White = No Sampling / Red = Digital Only / Blue = Analogue Only / Green = Digital & Analogue

A&P INSTRUMENT®
科 藝 儀 器

Upstream - BL0055 - Arduino Uno Shield

The Arduino Uno Shield connects to your PC via USB to provide you with a powerful microcontroller programming and debugging platform. The board can be used with various programming languages including: Assembly, C, Arduino IDE and Flowcode. To program the Arduino on the board a free tool called mLoader is available to download from the Matrix TSL website. The board presents all port pins collected together as E-blocks 2 sockets. The board takes power from an external power supply or from the micro USB port. Using the board with Flowcode allows the use of the advanced Ghost debugging features including in circuit debugging, real time pin monitoring and bus decoding. Microchip AVR-ISP compatible sockets are fitted to provide an alternative reprogramming and debugging techniques.

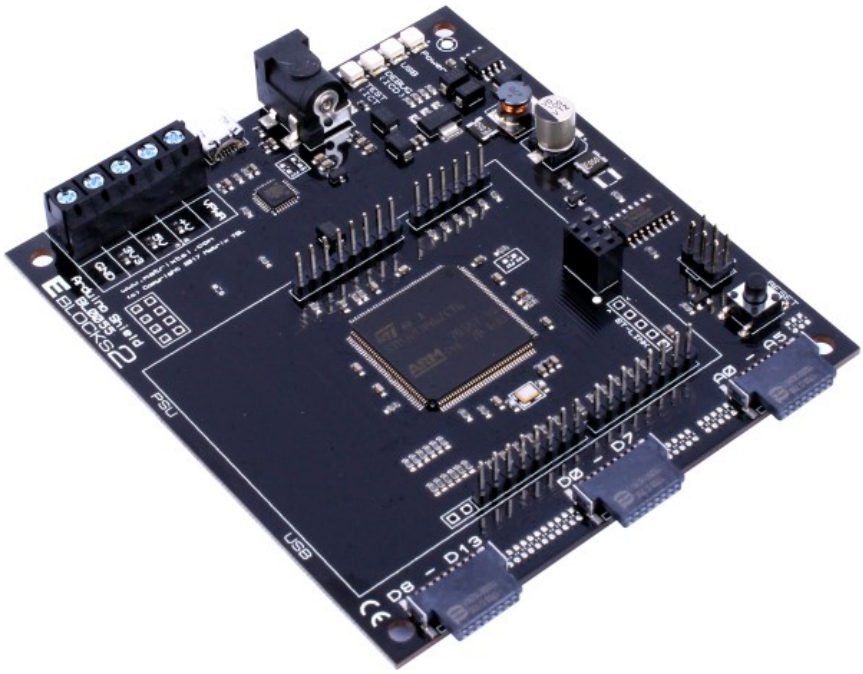

BL0055– Block Diagram

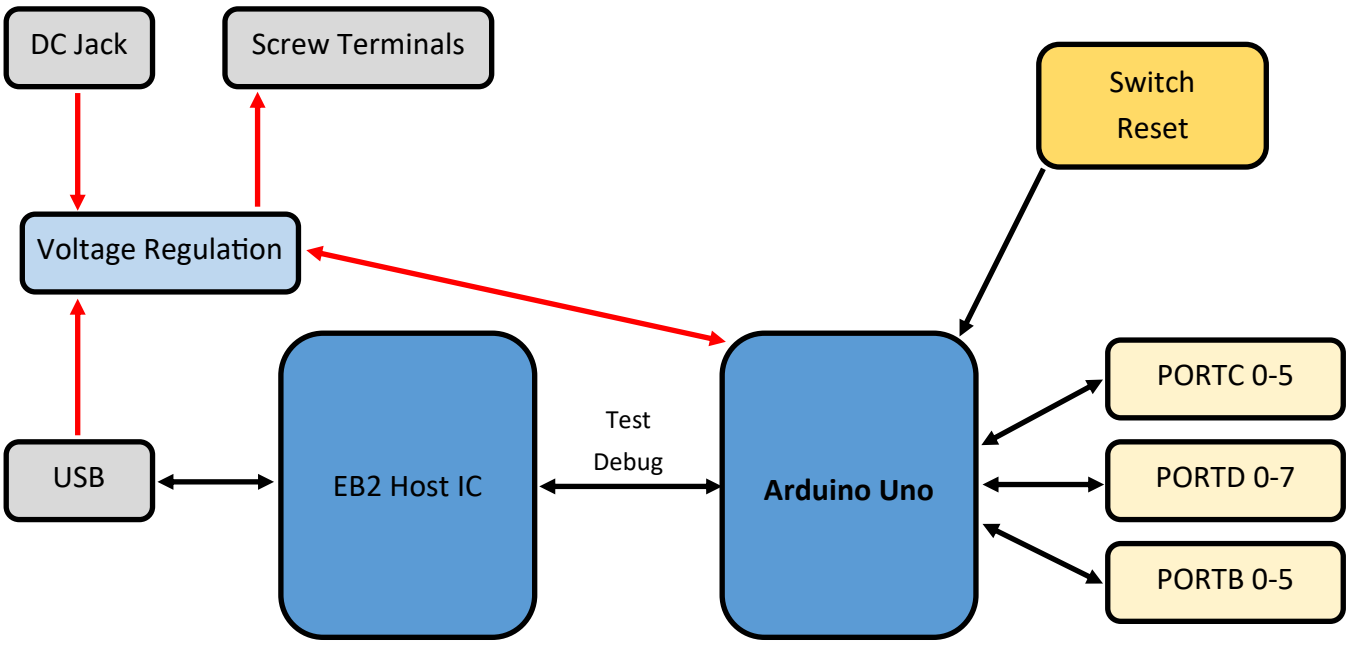

A&P INSTRUMENT®
科 藝 儀 器

Upstream - BL0055 - Arduino Uno Shield

BL0055 - Board Layout

1. DC Power Jack 7.5 - 12V
2. Micro USB Socket
3. Status LEDs
4. Power Output Terminals
5. Ghost Microcontroller IC
6. High Speed USB Transceiver
7. Arduino Connection Headers
8. ISP Header
9. Reset Switch
10. EB2 Port C Connector
11. EB2 Port D Connector
12. EB2 Port B Connector

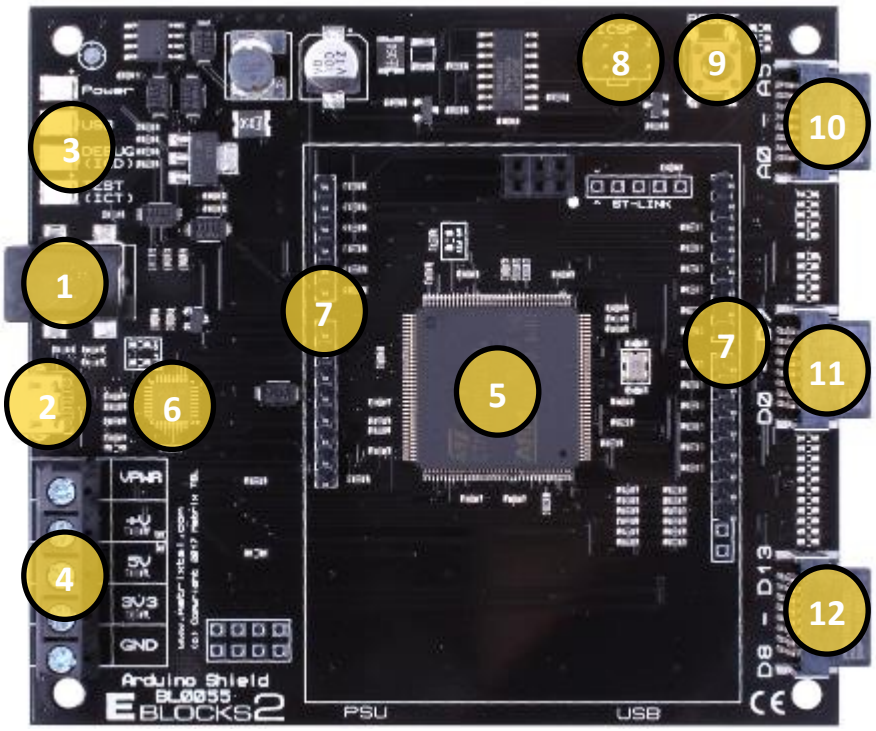

BL0055 – Flowcode Compatibility

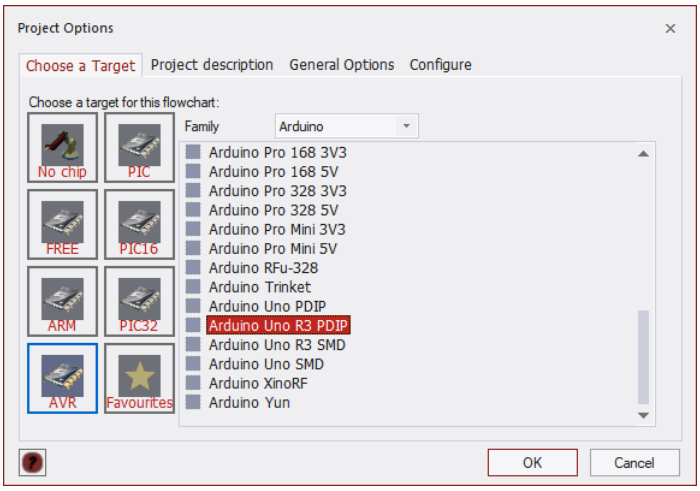

When selecting a target device in Flowcode choose the device that matches your Arduino board.

For example:

AVR -> Arduino -> Arduino Uno R3 PDIP

In the General Options tab select the correct COM port for the Arduino device. If no COM port is available then check your Arduino device is connected to the USB and that the USB driver is correctly installed.

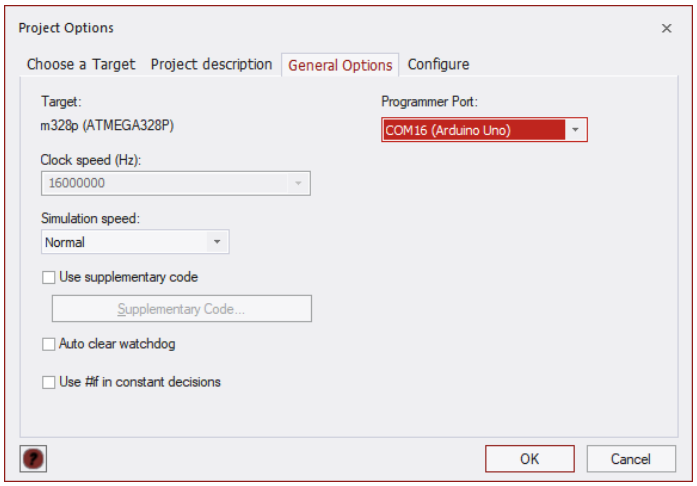

Please note the Arduino needs to be connected to the USB to allow it to be re-programmed. The E-block needs to be connected to the USB to allow Ghost (ICD/ICT) features.

A&P INSTRUMENT®
科 藝 儀 器

Upstream - BL0055 - Arduino Uno Shield

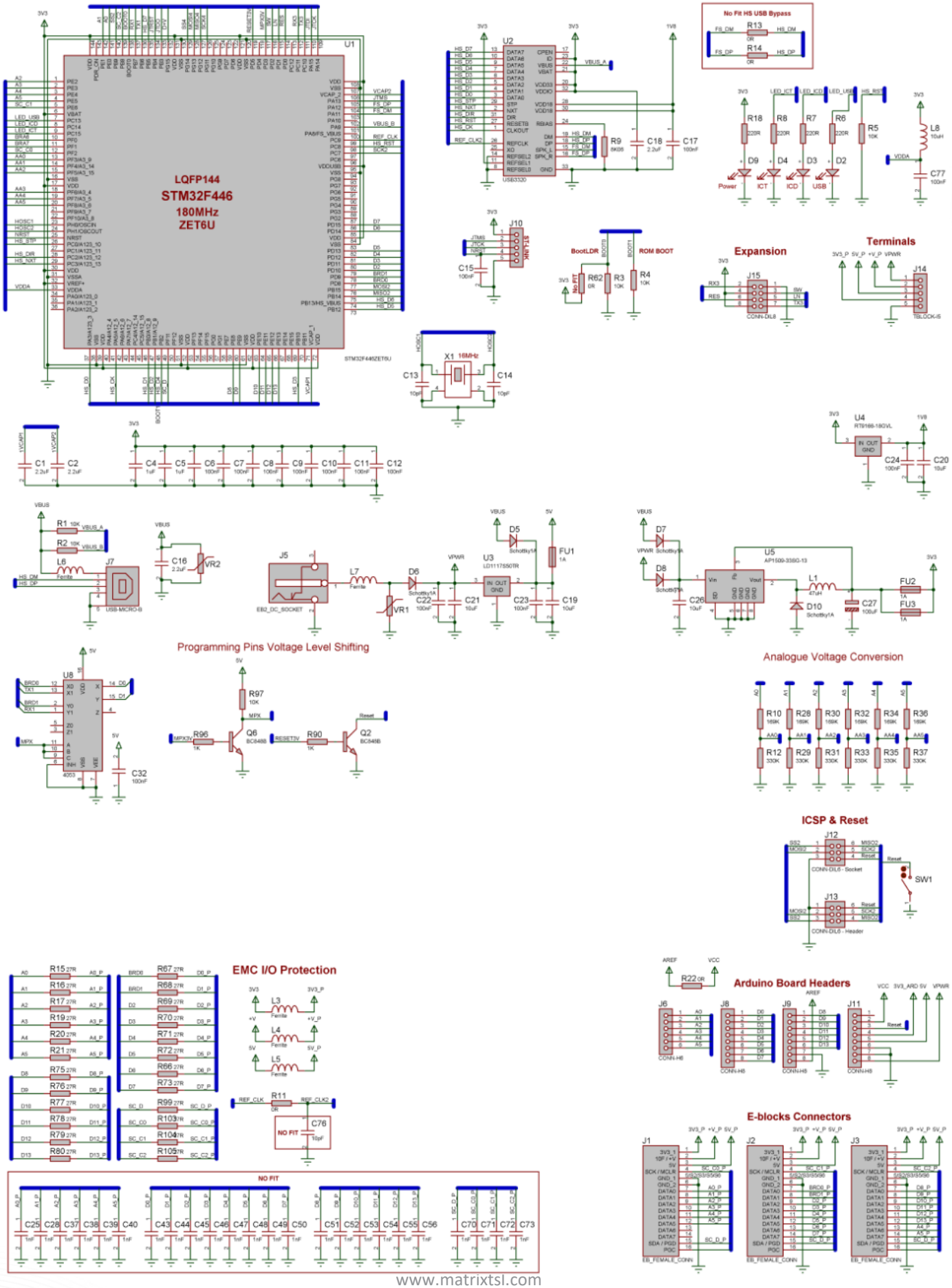

A&P INSTRUMENT®
科 藝 儀 器

Upstream - BL0055 - Arduino Uno Shield

Ghost Specification

VCC Voltage: 5V / 3V3 – Based on Arduino (Usually 5V)
ICD Pins: Clock = D1 / Data = D0
ICT Digital Channels: 20
ICT Analogue Channels: 6
ICT Port Pins Map:

	7	6	5	4	3	2	1	0
Port A			A5	A4	A3	A2	A1	A0
Port D0-7	D7	D6	D5	D4	D3	D2	D1	D0
Port D8-13			D13	D12	D11	D10	D9	D8

White = No Sampling / Red = Digital Only / Blue = Analogue Only / Green = Digital & Analogue

A&P INSTRUMENT®
科 藝 儀 器

Upstream - BL0061 - ST ARM Programmer

The STARM microcontroller programmer connects to your PC via USB to provide you with a powerful microcontroller programming and debugging platform. The board can be used with various programming languages including: Assembly, C and Flowcode. To program the ARM on the board a free tool called mLoader is available to download from the Matrix TSL website. The board comes complete with a powerful series 4 ARM microcontroller. The board presents all port pins collected together as E-blocks 2 sockets. The board takes power from an external power supply or from the micro USB port. Using the board with Flowcode allows the use of the advanced Ghost debugging features including in circuit debugging, real time pin monitoring and bus decoding. ST-LINK compatible sockets are fitted to provide alternative reprogramming and debugging techniques.

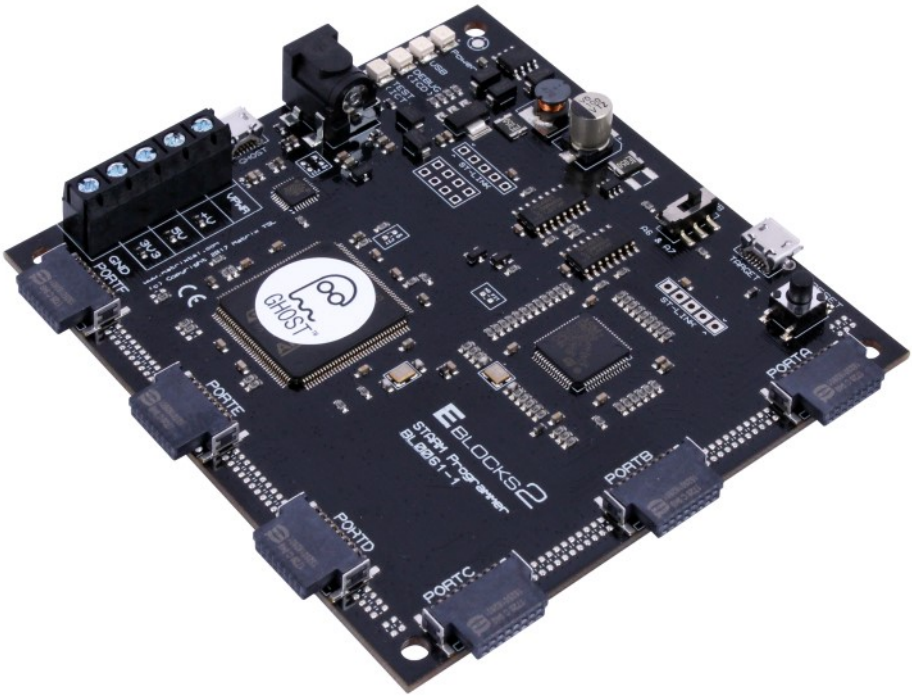

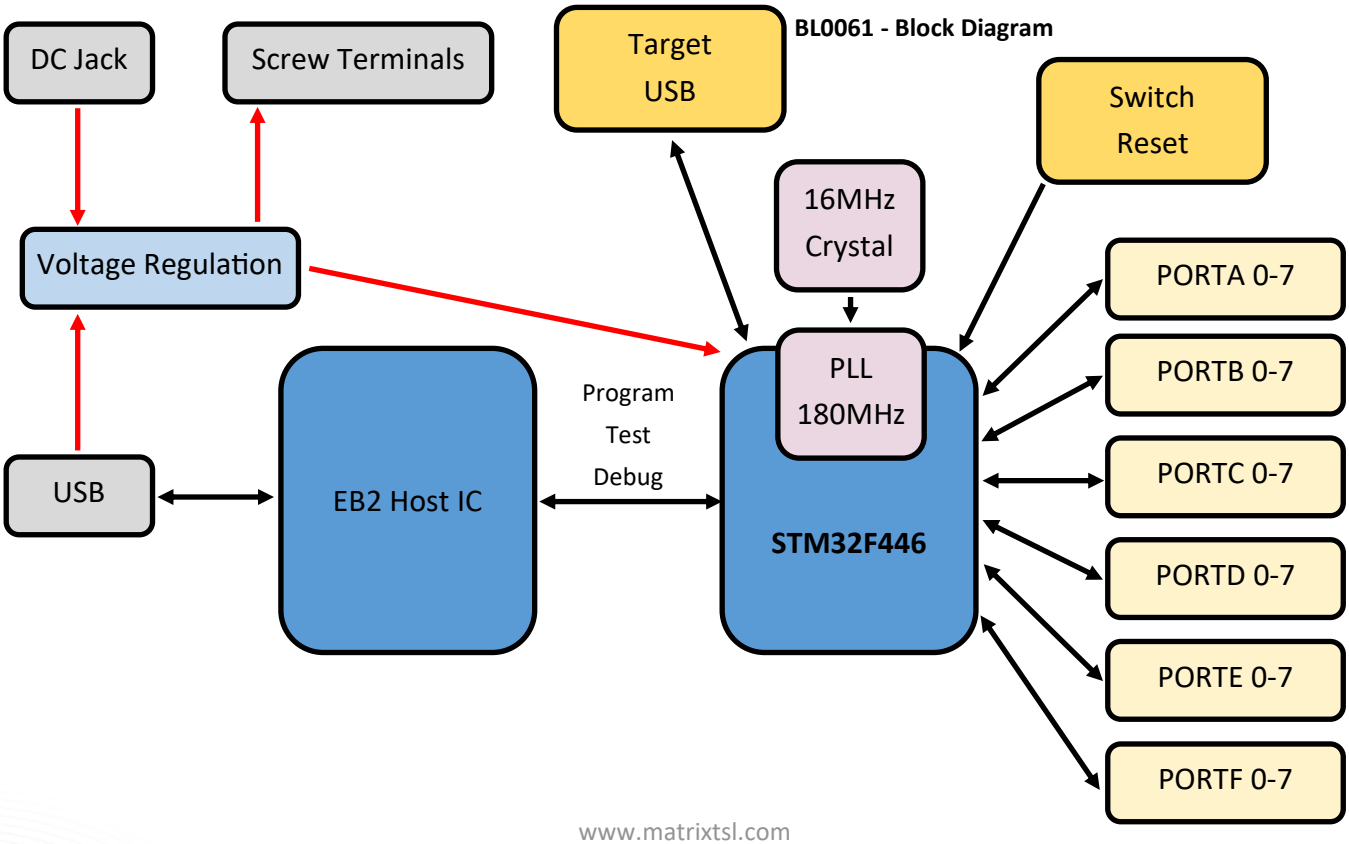

A&P INSTRUMENT®
科 藝 儀 器

Upstream - BL0061 - ST ARM Programmer

Board Layout

1. DC Power Jack 7.5 - 12V
2. Micro USB Socket
3. Status LEDs
4. Power Output Terminals
5. Ghost Microcontroller IC
6. High Speed USB Transceiver
7. Target Microcontroller STM32F446
8. USB / A6&7 Selection Switch
9. Target Micro USB Socket
10. Reset Switch
11. EB2 Port A Connector
12. EB2 Port B Connector
13. EB2 Port C Connector
14. EB2 Port D Connector
15. EB2 Port E Connector
16. EB2 Port F Connector

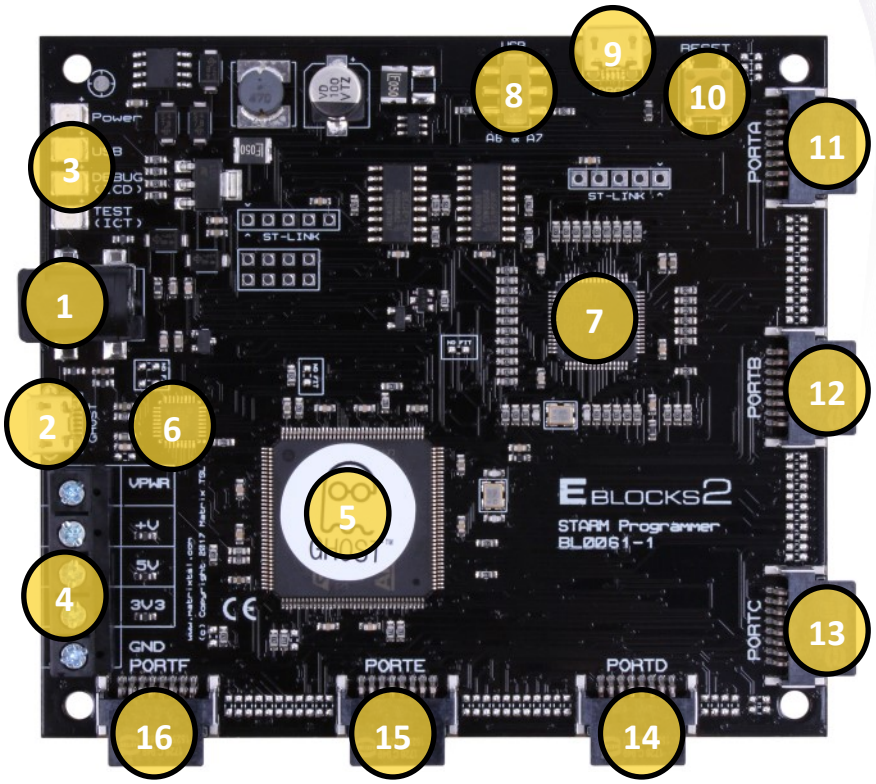

BL0061 - Board Schematic

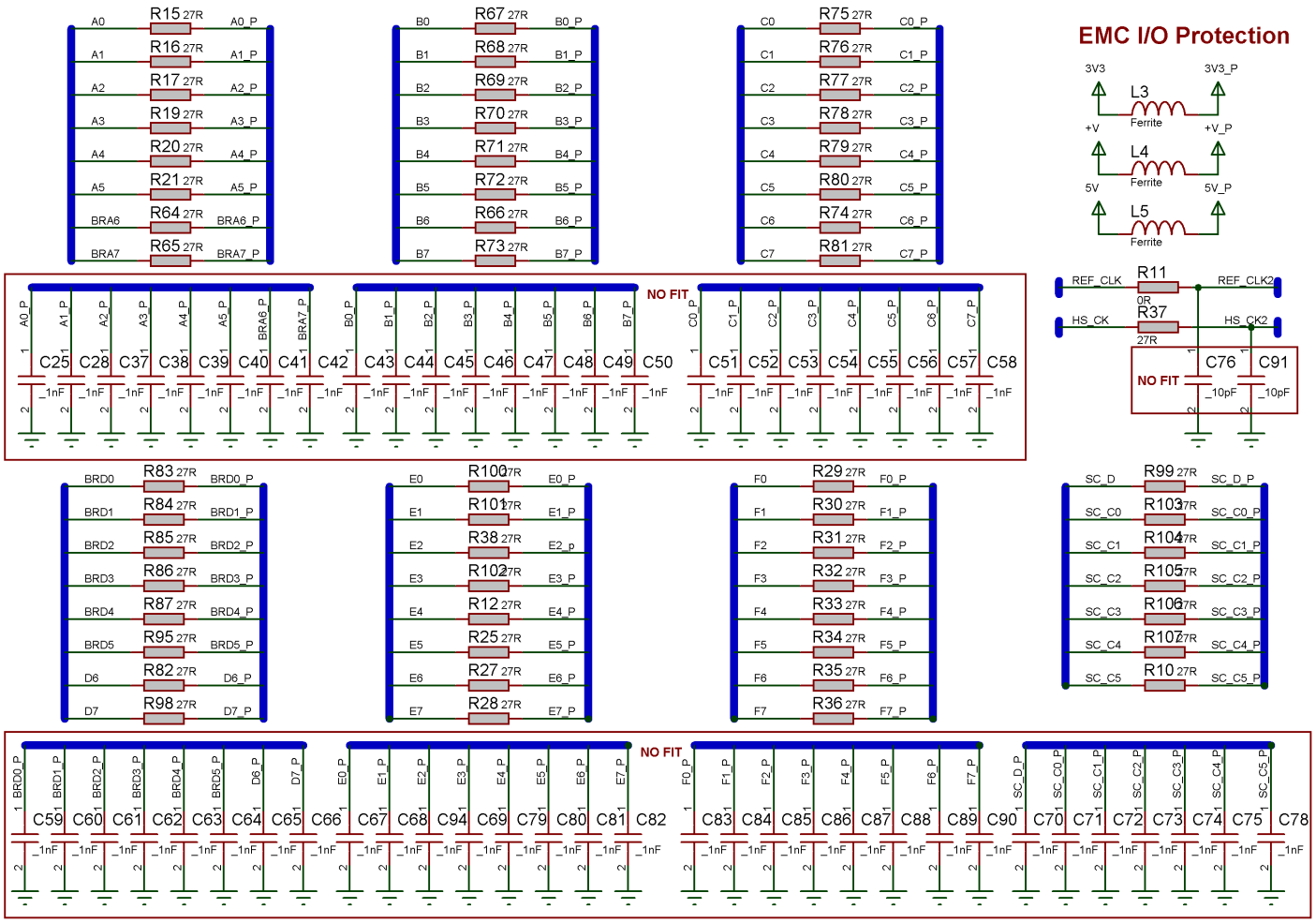

A&P INSTRUMENT®
科 藝 儀 器

Upstream - BL0061 - ST ARM Programmer

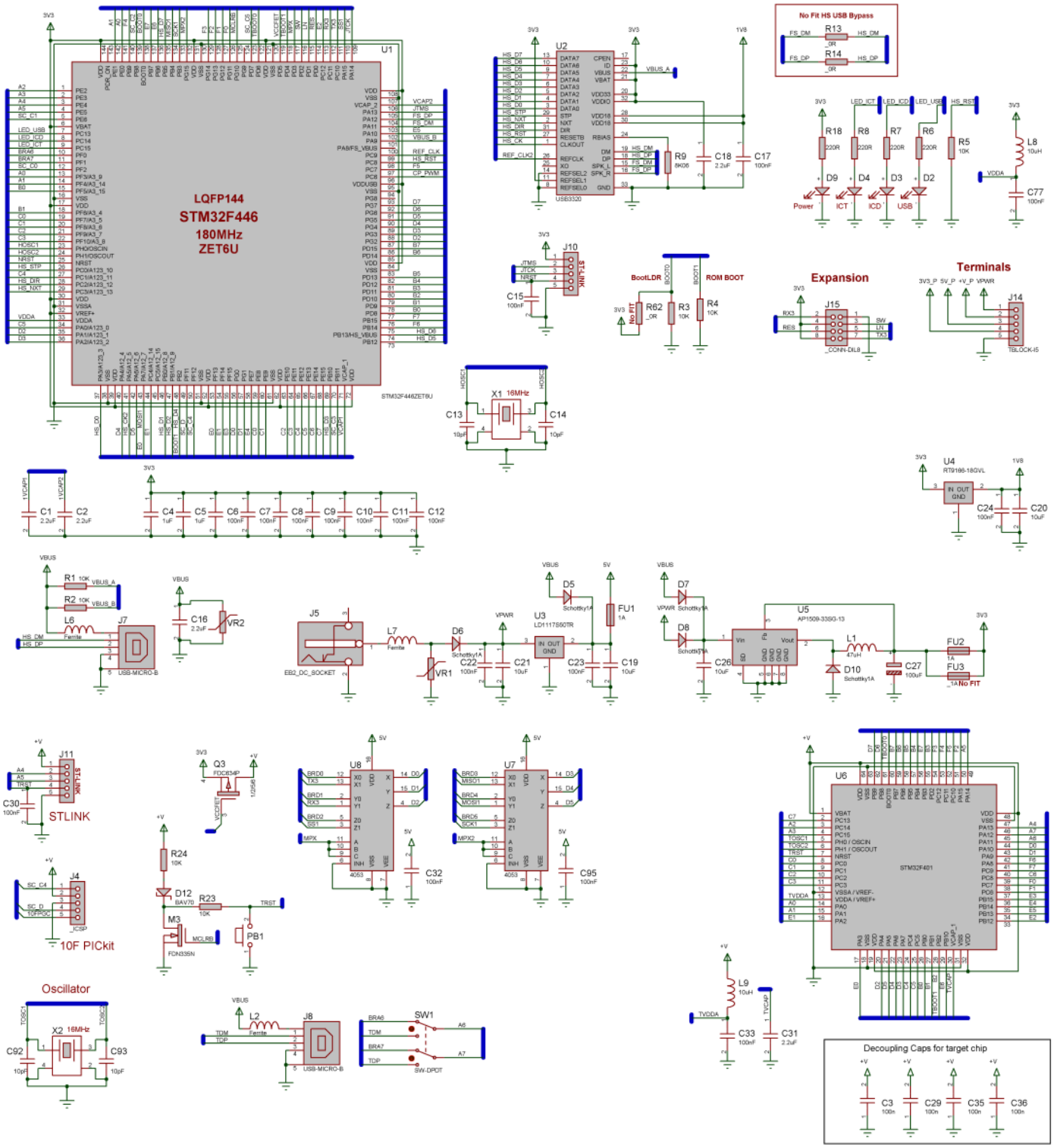

A&P INSTRUMENT®
科 藝 儀 器

Upstream - BL0061 - ST ARM Programmer

Ghost Specification

VCC Voltage: 3V3
ICD Pins: Clock = D1 / Data = D0
ICT Digital Channels: 48
ICT Analogue Channels: 16
ICT Port Pins Map:

	7	6	5	4	3	2	1	0
Port A	A7	A6	A5	A4	A3	A2	A1	A0
Port B	B7	B6	B5	B4	B3	B2	B1	B0
Port C	C7	C6	C5	C4	C3	C2	C1	C0
Port D	D7	D6	D5	D4	D3	D2	D1	D0
Port E	E7	E6	E5	E4	E3	E2	E1	E0
Port F	F7	F6	F5	F4	F3	F2	F1	F0

White = No Sampling / Red = Digital Only / Blue = Analogue Only / Green = Digital & Analogue

A&P INSTRUMENT®
科 藝 儀 器

Upstream - BL0080 - 8-Bit PIC Multi-Programmer

The 8-bit PIC microcontroller programmer connects to your PC via USB to provide you with a powerful microcontroller programming and debugging platform. The board can be used with various programming languages including: Assembly, C and Flowcode. To program the PIC on the board a free tool called mLoader is available to download from the Matrix TSL website. The board will program a wide range of 18, 28 and 40 pin PICmicro microcontroller devices from the PIC16F and PIC18F series. The board presents all port pins collected together as E-blocks 2 sockets. The board takes power from an external power supply or from the micro USB port. Using the board with Flowcode allows the use of the advanced Ghost debugging features including in circuit debugging, real time pin monitoring and bus decoding. Microchip PICkit compatible sockets are fitted to provide an alternative reprogramming and debugging techniques. A powerful 40 pin PIC16F18877 device is shipped with the multiprogrammer.

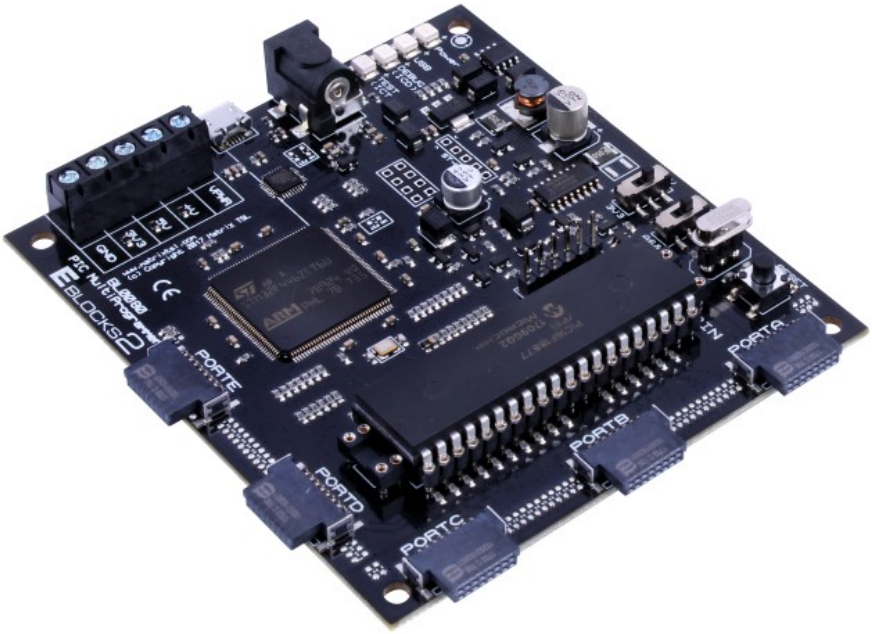

BL0080 - Block Diagram

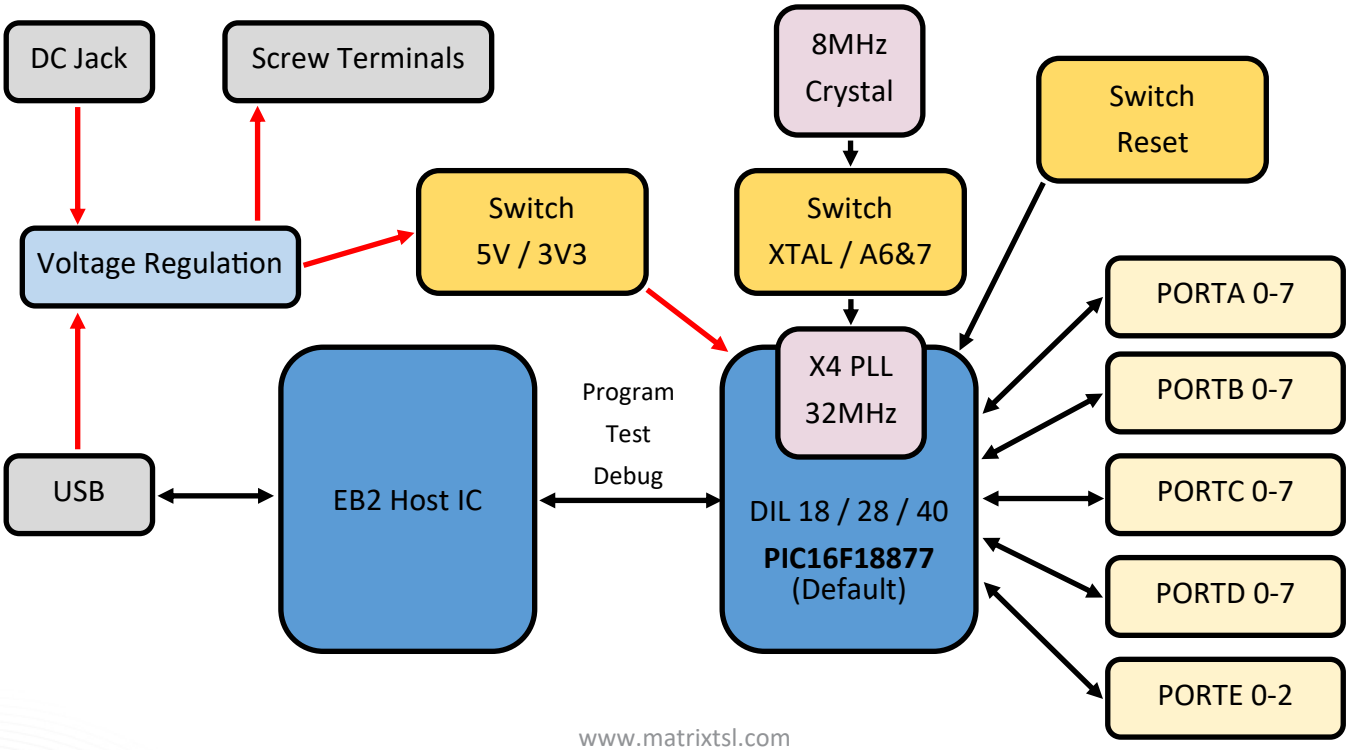

A&P INSTRUMENT®
科 藝 儀 器

Upstream - BL0080 - 8-Bit PIC Multi-Programmer

Board Layout

1. DC Power Jack 7.5 - 12V
2. Micro USB Socket
3. Status LEDs
4. Power Output Terminals
5. Ghost Microcontroller IC
6. High Speed USB Transceiver
7. Target Microcontroller 16F18877
8. Voltage Selection Switch
9. Oscillator Selection Switch
10. 8MHz Socketed Crystal
11. Reset Switch
12. EB2 Port A Connector
13. EB2 Port B Connector
14. EB2 Port C Connector
15. EB2 Port D Connector
16. EB2 Port E Connector

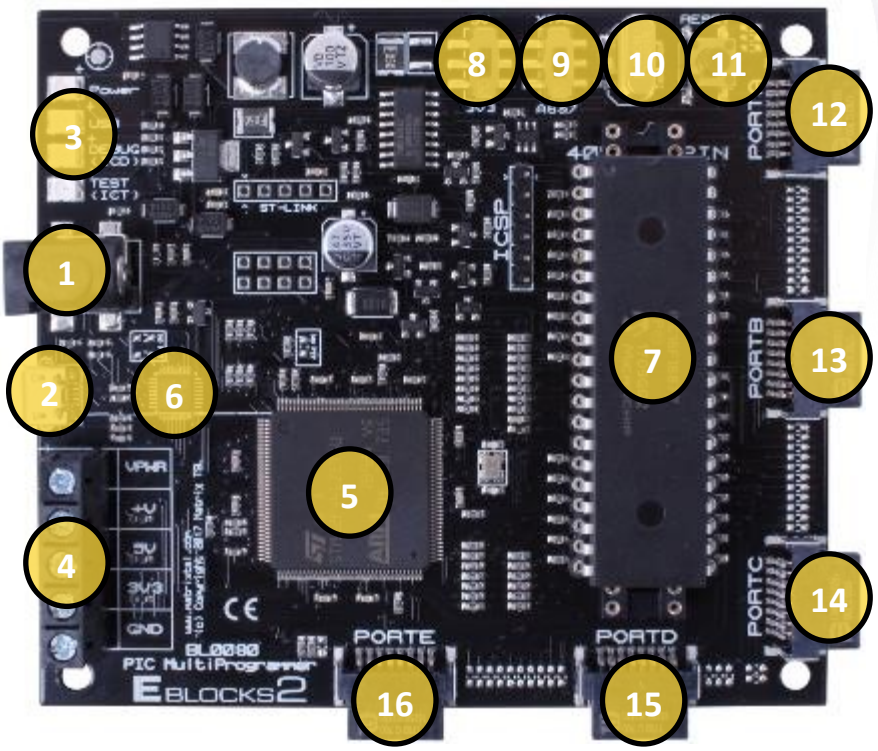

BL0080 - Board Schematic

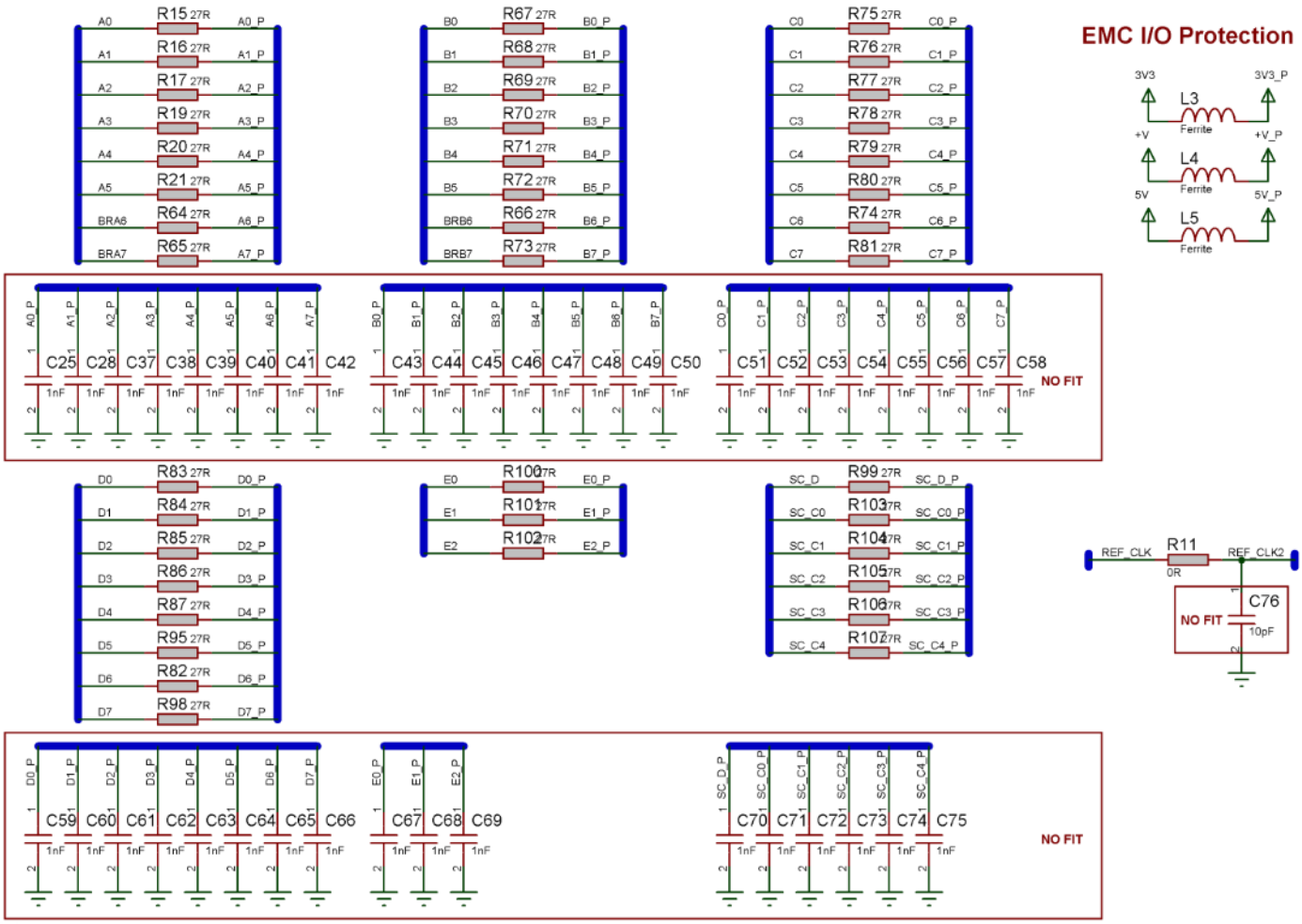

A&P INSTRUMENT®
科 藝 儀 器

Upstream - BL0080 - 8-Bit PIC Multi-Programmer

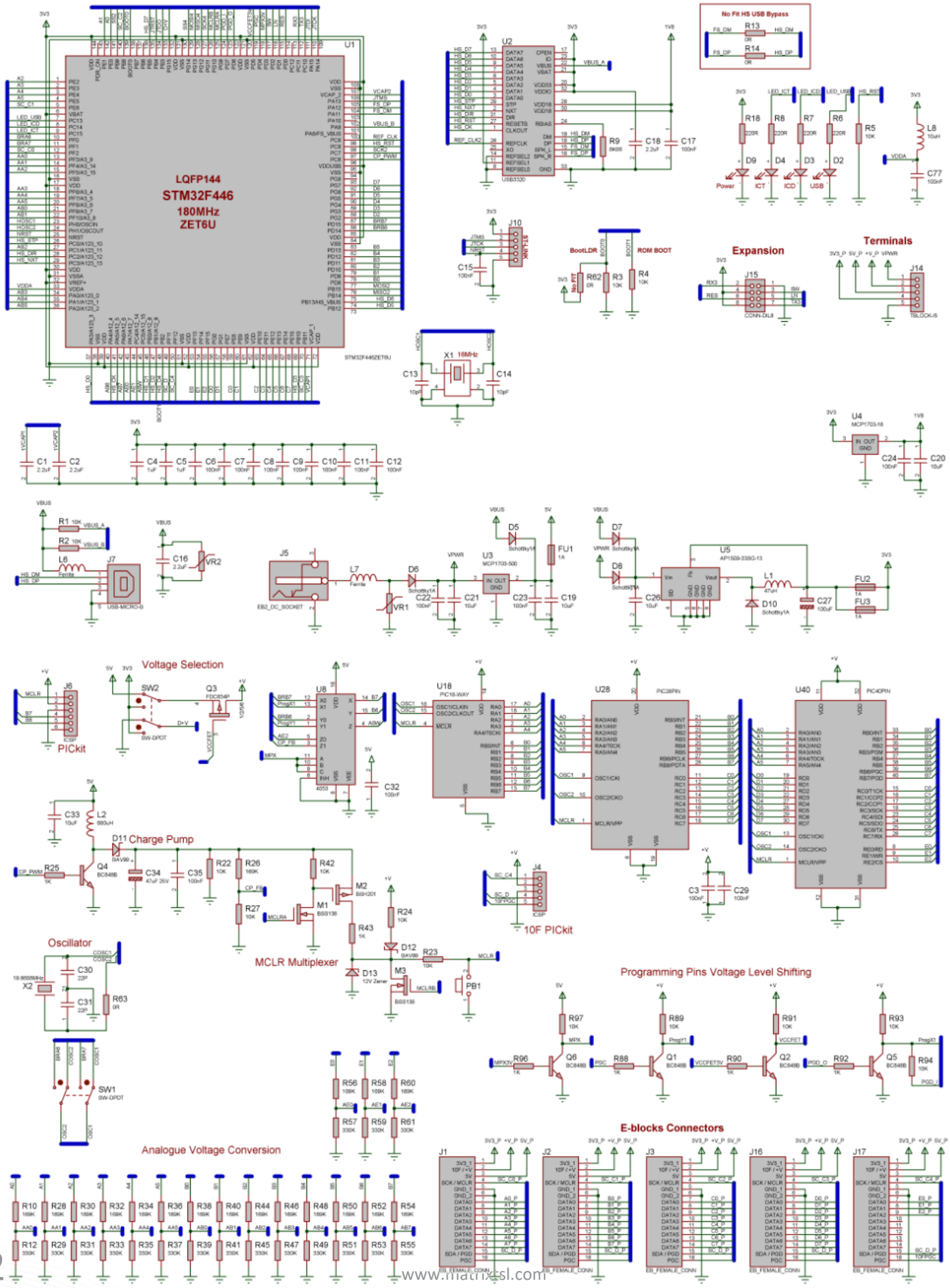

A&P INSTRUMENT®
科 藝 儀 器

Upstream - BL0080 - 8-Bit PIC Multi-Programmer

Ghost Specification

VCC Voltage: 5V / 3V3
ICD Pins: Clock = B6 / Data = B7
ICT Digital Channels: 35
ICT Analogue Channels: 17
ICT Port Pins Map:

	7	6	5	4	3	2	1	0
Port A	A7	A6	A5	A4	A3	A2	A1	A0
Port B	B7	B6	B5	B4	B3	B2	B1	B0
Port C	C7	C6	C5	C4	C3	C2	C1	C0
Port D	D7	D6	D5	D4	D3	D2	D1	D0
Port E					E3	E2	E1	E0

White = No Sampling / Red = Digital Only / Blue = Analogue Only / Green = Digital & Analogue

A&P INSTRUMENT®
科 藝 儀 器

Upstream - BL0086 - 8-Bit AVR Programmer

The AVR Programmer connects to your PC via USB to provide you with a powerful microcontroller programming and debugging platform. The board can be used with various programming languages including: Assembly, C, Arduino IDE and Flowcode. To program the AVR on the board a free tool called mLoader is available to download from the MatrixTSL website. The board comes complete with a powerful ATMEGA328P microcontroller. The board presents all port pins collected together as E-blocks 2 sockets. The board takes power from an external power supply or from the micro USB port. Using the board with Flowcode allows the use of the advanced Ghost debugging features including in circuit debugging, real time pin monitoring and bus decoding. Microchip AVR-ISP compatible sockets are fitted to provide an alternative reprogramming and debugging techniques.

BL0086- Block Diagram

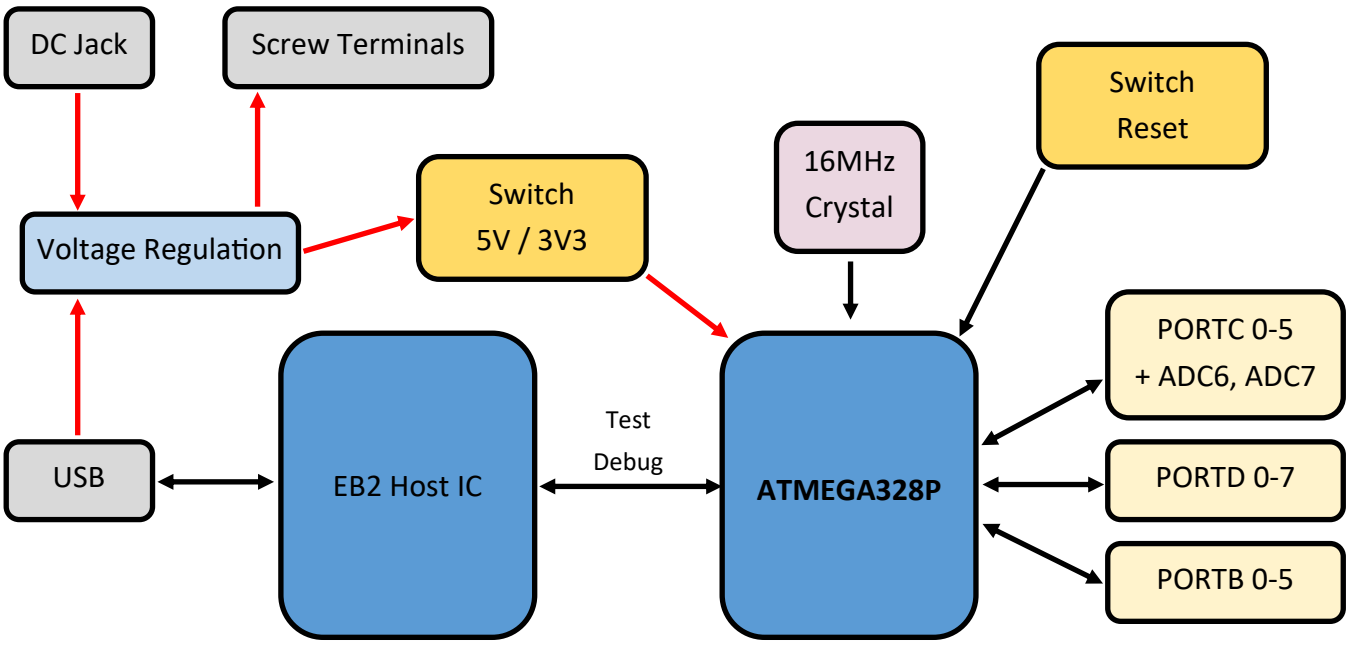

A&P INSTRUMENT®
科 藝 儀 器

Upstream - BL0086 - 8-Bit AVR Programmer

Board Layout

1. DC Power Jack 7.5 - 12V
2. Micro USB Socket
3. Status LEDs
4. Power Output Terminals
5. Ghost Microcontroller IC
6. High Speed USB Transceiver
7. Target Microcontroller ATMEGA328P
8. Voltage Selection Switch
9. 16MHz SMD Crystal
10. Reset Switch
11. EB2 Port C Connector
12. EB2 Port D Connector
13. EB2 Port B Connector

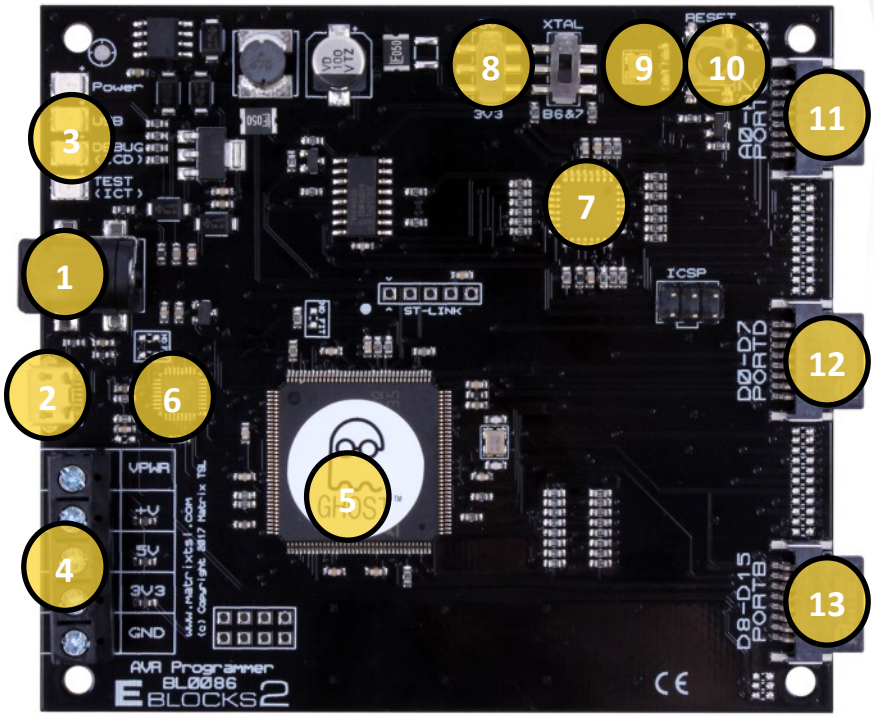

A&P INSTRUMENT®
科 藝 儀 器

Upstream - BL0086 - 8-Bit AVR Programmer

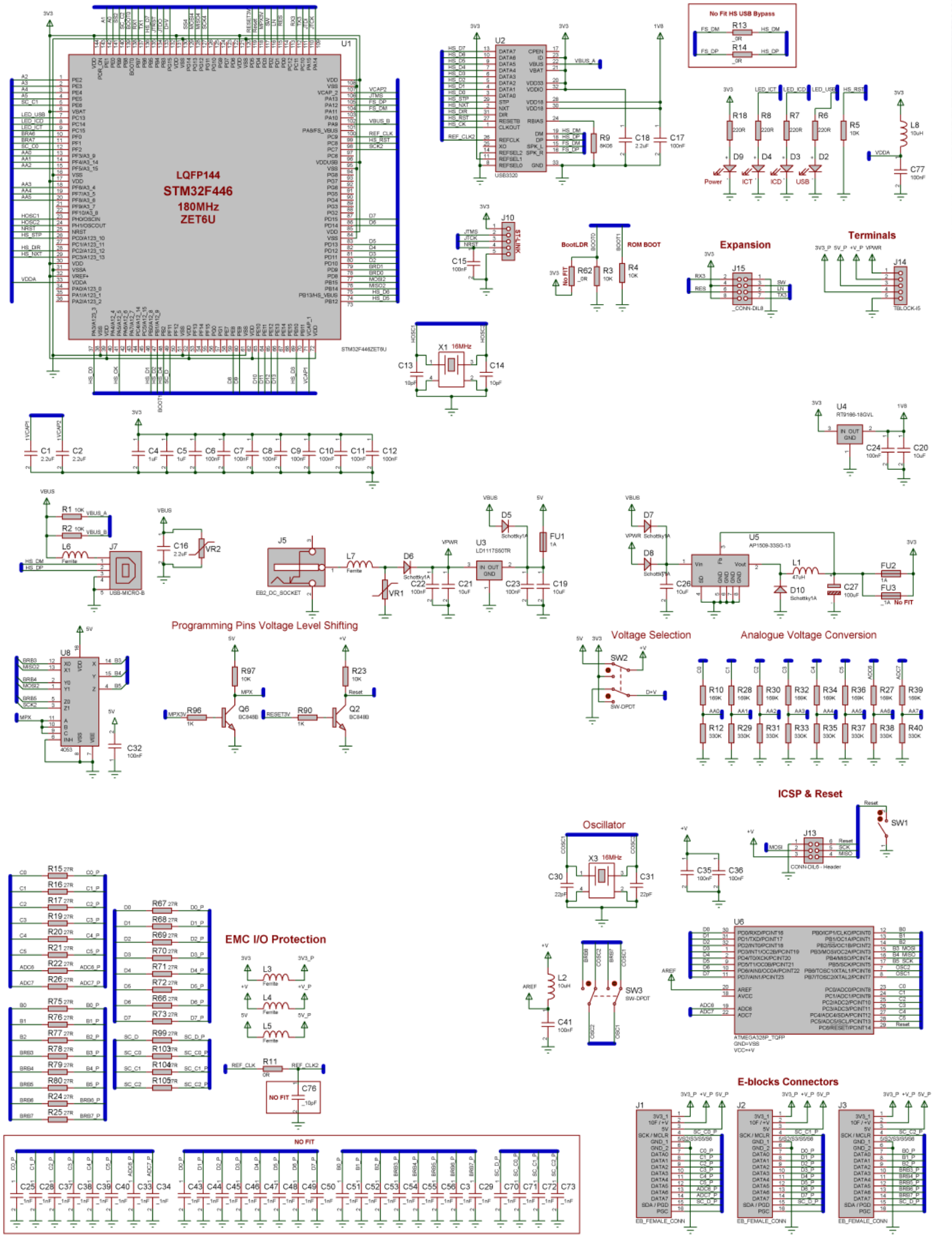

A&P INSTRUMENT®
科 藝 儀 器

Upstream - BL0086 - 8-Bit AVR Programmer

Ghost Specification

VCC Voltage: 5V / 3V3
ICD Pins: Clock = B5 / Data = B4
ICT Digital Channels: 20
ICT Analogue Channels: 8
ICT Port Pins Map:

	7	6	5	4	3	2	1	0
Port C	ADC7	ADC6	C5	C4	C3	C2	C1	C0
Port D	D7	D6	D5	D4	D3	D2	D1	D0
Port B			B5	B4	B3	B2	B1	B0

White = No Sampling / Red = Digital Only / Blue = Analogue Only / Green = Digital & Analogue

A&P INSTRUMENT®
科 藝 儀 器

Reprogramming using mLoader

To reprogram the E-blocks2 hardware outside of Flowcode you can use the mLoader software to transfer a pre-compiled .hex file onto the microcontroller device. mLoader is available to download from the Matrix TSL website www.matrixtsl.com.

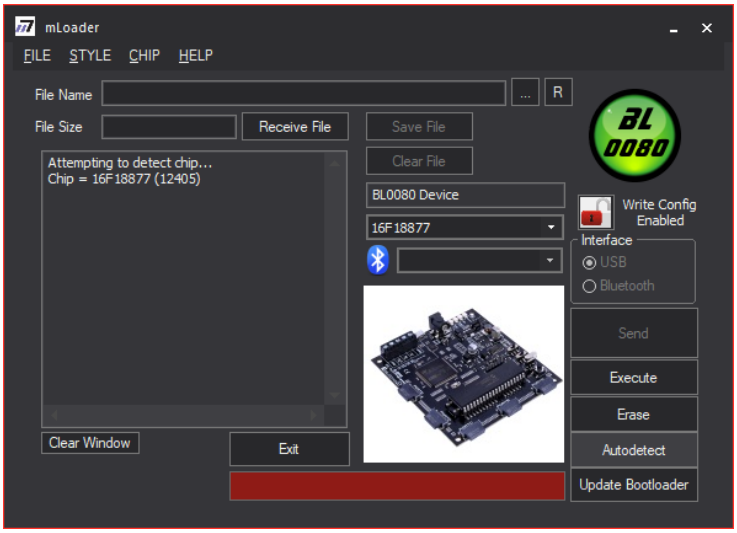

Reprogramming using Flowcode

To setup Flowcode to program the E-blocks2 upstream hardware simply choose your selected board from the Misc family when picking a target microcontroller device. If using the BL0080 board and a none standard microcontroller (PIC16F18877) then simply choose the microcontroller from the list.

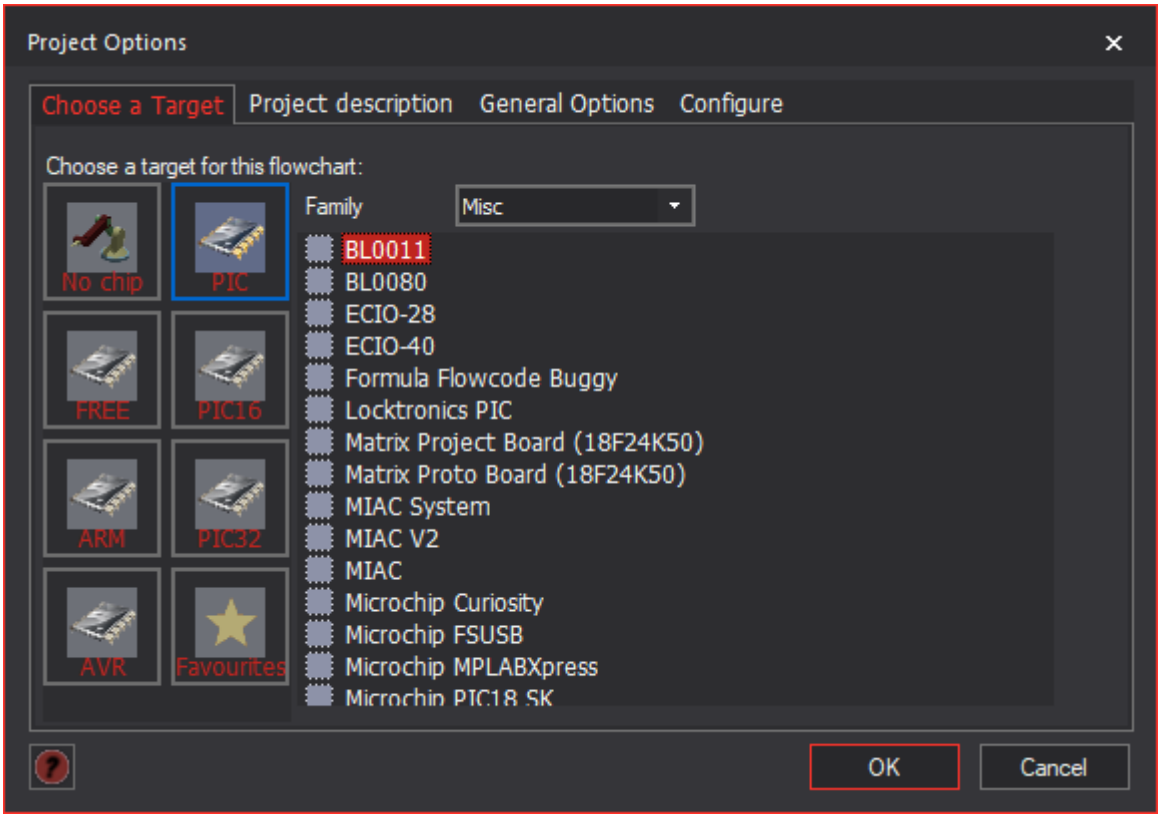

Ensure the USB drivers are correctly installed and then simply click the compile to chip button to send the Flowcode program to the microcontroller on the board.

A&P INSTRUMENT®
科 藝 儀 器

Ghost - Auto Board ID using Flowcode

Auto board identification support for the E-blocks 2 range is available in Flowcode 7.3 onward.

To see the connected E-blocks2 boards in Flowcode 7.3 you need the Test & Debugging feature pack. Then simply click on the View -> Console menu item to bring up the console window. The Default tab shows the Auto ID board connections.

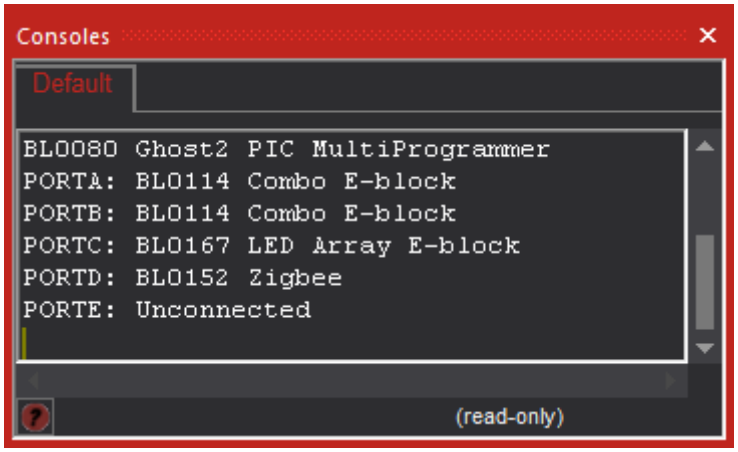

Photo showing the connected hardware

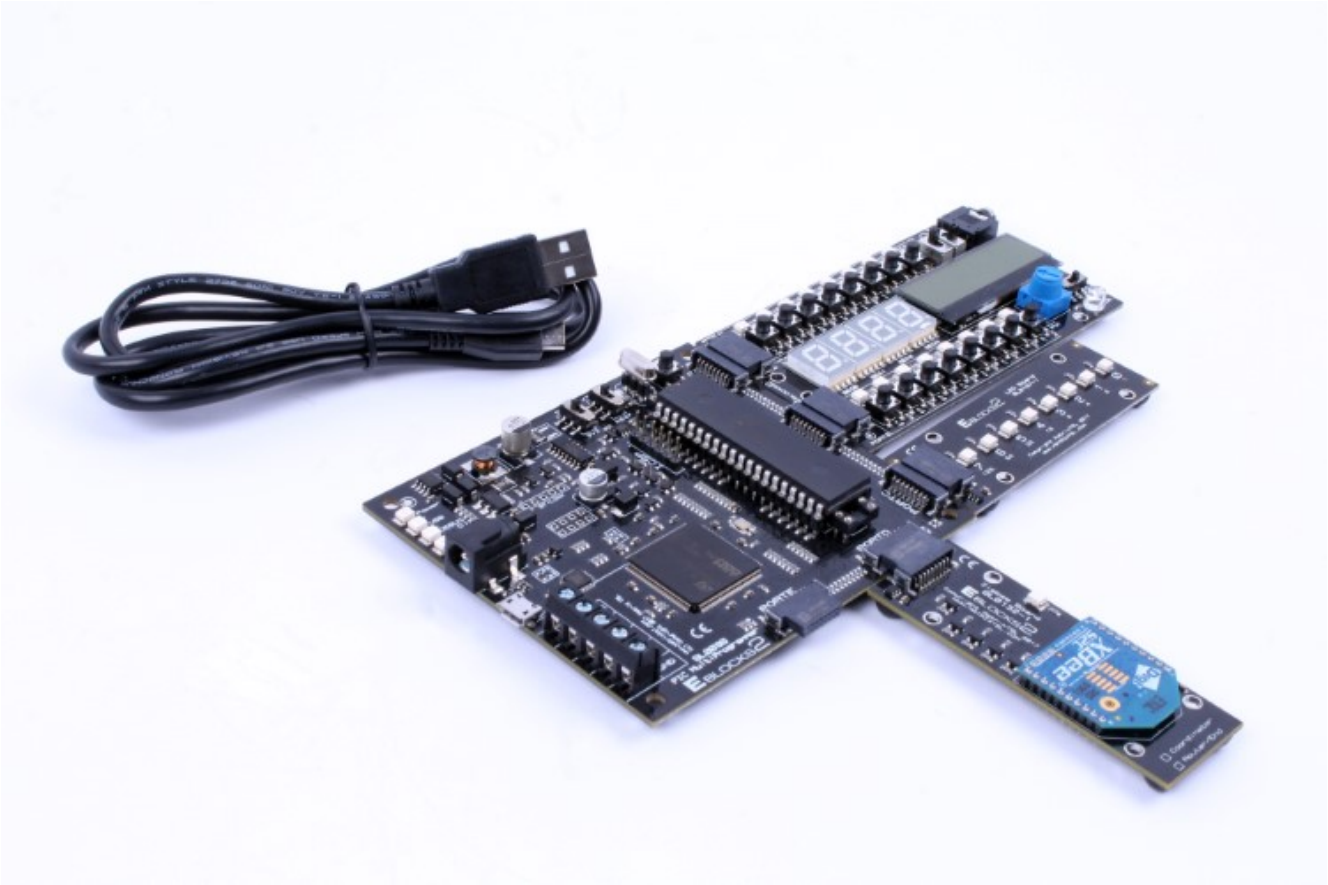

A&P INSTRUMENT®
科 藝 儀 器

Ghost - In Circuit Debug (ICD) using Flowcode

In Circuit Debug (ICD) allows you to follow and control the execution of your Flowcode program on real world hardware using Flowcode to control the program execution. ICD support for the E-blocks 2 range is available in Flowcode 7.3 onwards.

To enable ICD first connect the E-blocks 2 board via USB and ensure the USB drivers are installed correctly. Once the board is detected the three Ghost icons will become available.

Click the ICD icon to toggle ICD mode on and off, When ICD mode is enabled the icons will turn green and the ICD LED will light on the E-blocks board.

Compile the program to the device as normal using the Compile To Chip button. Please note that a program in ICD mode will wait for the trigger from Flowcode before being allowed to run.

The simulation controls (Run, Pause, Stop, Step) will now control the execution of the hardware.

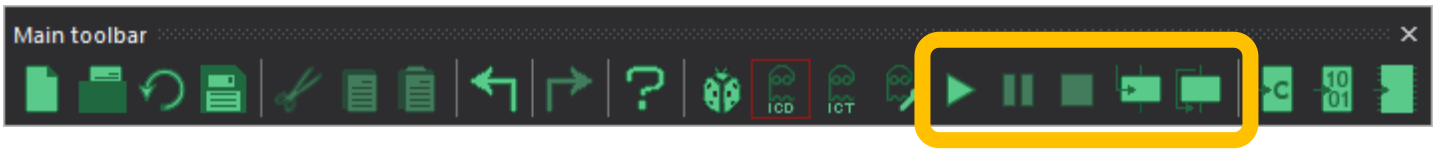

You can set or clear breakpoints while the program is stopped or paused by right clicking an icon and choosing Toggle Breakpoint. Active breakpoints will be shown with a red circle highlighting the Flowchart icon. When paused or stepping the current icon will be highlighted in green.

When the program is paused or running slowly variable values can be monitored or changed using the simulation debugger window. Variables can be added to the window by double clicking the "Expression" field and typing the name of the variable you want to display or control. The value of the variable can be altered by selecting the corresponding value text field and manually changing the value. Please note that only Global variables can be used with the simulation debugger.

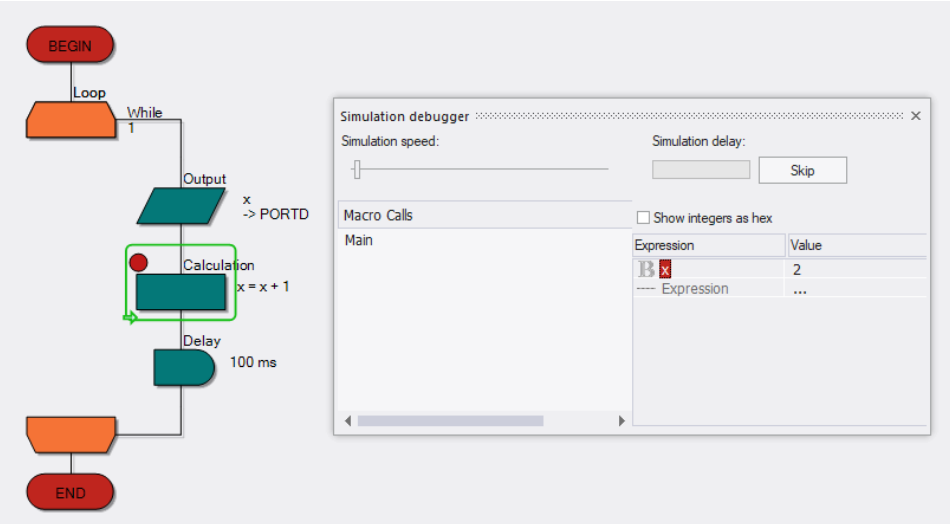

A&P INSTRUMENT®
科 藝 儀 器

Ghost - In Circuit Test (ICT) using Flowcode

In Circuit Test (ICT) allows you to monitor the analogue and digital signals surrounding your target microcontroller. ICT support for the E-blocks 2 range is available in Flowcode 7.3 onwards.

To enable ICT first connect the E-blocks 2 board via USB and ensure the USB drivers are installed correctly. Once the board is detected the three Ghost icons will become available.

The first time you click the ICT button the Ghost Options window will appear allowing you to control which pins are being monitored. The ICT Analog tab allows you to control which analogue pins will be monitored. The ICT Digital tab allows you to control which digital pins will be monitored.

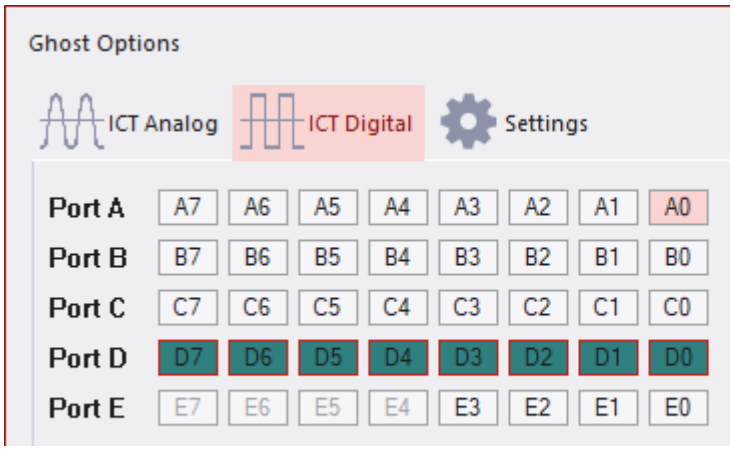

Flowcode will attempt to make a best guess to enable the pins that are being used in the program. The Untick All and Tick Used buttons can be helpful when changing the program or adding and removing pins. The settings tab lets you control the ICT digital and analog sample speeds individually.

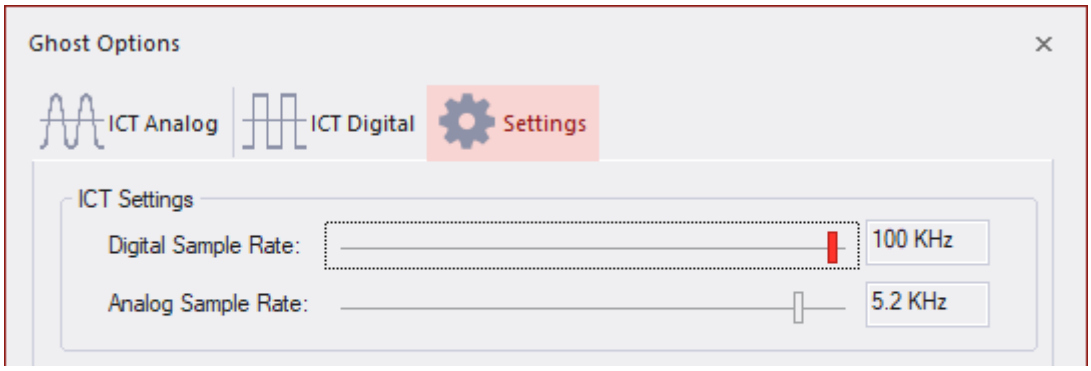

When ICT is active a red box will appear around the ICT button on the toolbar and the ICT LED will light on the E-blocks board.

A&P INSTRUMENT®
科 藝 儀 器

Ghost - In Circuit Test (ICT) using Flowcode

ICT data can be seen on the Data Recorder and Oscilloscope windows.

The Oscilloscope is useful for recurring signals where you can set a repeating trigger and inspect a part of a waveform in isolation. The Oscilloscope window allows you to assign various data sources to one of the four available waveforms and acts a lot like a standard electronics oscilloscope.

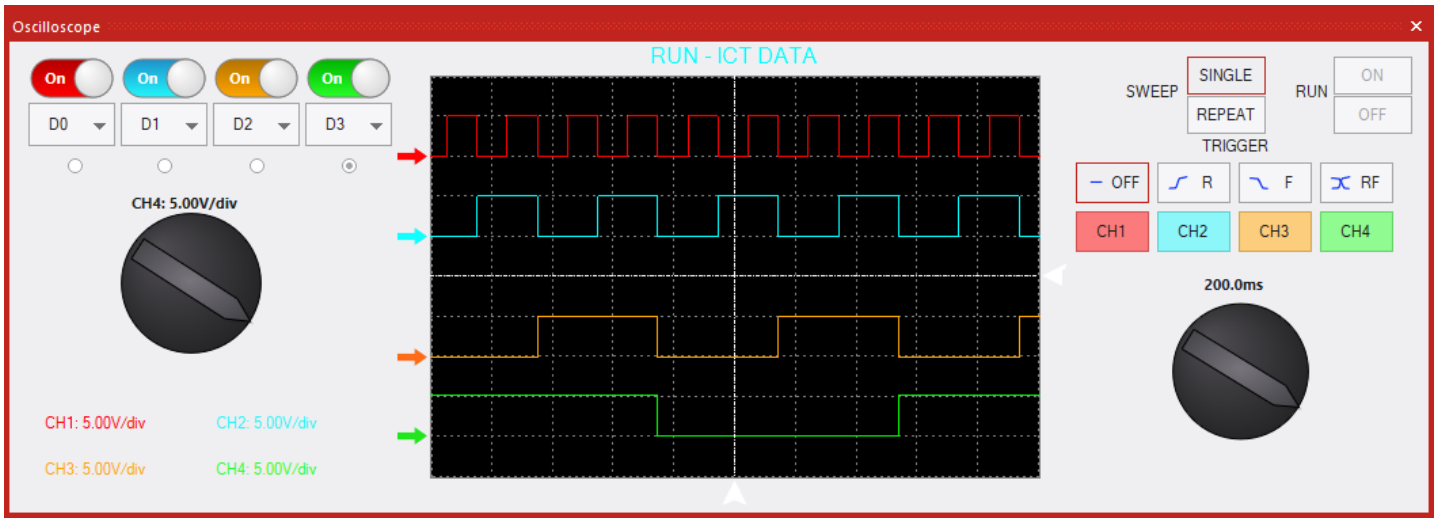

The Data Recorder is useful for comparing multiple signals over time. To add signals to the data recorder window simply use the Scope Monitor component from the Tools section of the Component Toolbar. Each Scope Monitor component provides up to 4 digital pins and 2 analogue pins via the component properties. If more pins are required then simply add another Scope Monitor component to the Flowcode panel.

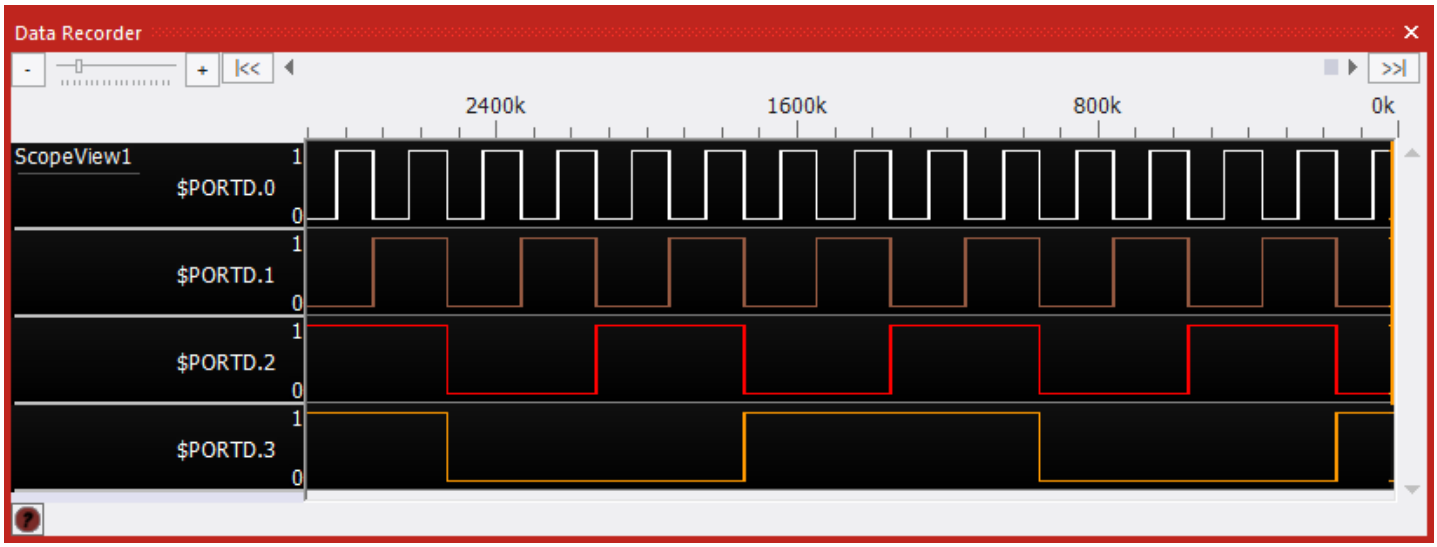

ICT can be used in isolation or in conjunction with ICD to combine external pin voltages with internal program flow control.

A&P INSTRUMENT®
科 藝 儀 器

LCD - Embedded Font Set

Here is the inbuilt alphanumeric font set. As with standard alphanumeric displays, locations 0-7 are user programmable allowing you to create your own characters or glyphs. The columns shown in green are common with standard HD44780 displays, other columns are specific to the BL0169 and the BL0114 displays only.

LCD Key differences

There are a number of key differences between this LCD and the standard HD44780 type displays which are listed below.

- Scrolling and blinking cursor display commands are not supported.
- Printing characters to the display automatically moves through lines 0,1,2,3 rather than the usual 0,2,1,3.
- Enhanced character set support.

Matrix Technology Solutions
The Factory,
33 Gibbet Street,
Halifax, HX1 5BA,
United Kingdom

t: +44 (0) 1422 252380
f: +44 (0) 1422 341830
e: sales@matrixtsl.com

www.matrixtsl.com

SCIENCE
ENGINEERING
TECHNOLOGY

A&P INSTRUMENT CO., LTD.
科 藝 儀 器 有 限 公 司

地址：香港九龍灣啟祥道 9 號信和工商中心 1 樓 68 室
Room 68, 1/F Sino Industrial Plaza,
9 Kai Cheung Road, Kowloon Bay, Kowloon
Tel: (852) 2755 6578 E-mail: info@anp.com.hk
Fax: (852) 2755 4549 http://www.anp.com.hk/